Document ID:

8060

# LHC Q3 LQXC Cryostat Shipping Traveler

SCANNED
MAY 25 2006

# 333731 / Rev. C

**Job No:** **248**

**E + F Project/Task No.:** **300/1.1.1.6.2**

**M + S Project/Task No.:** **300/1.1.1.6.2**

**Place This Side Down For Scanning!!!**

Magnet Travelers

# LQXC03-0

Document ID:

8060

Job No.:

248

Project/Task No.

300/1.1.1.6.2

Series:

LQXC

Serial No:

LQXC03

Rework ID:

0

Specification No.:

333731

Revision:

C

# LQXC03-0

**Fermi National Accelerator Laboratory**
**Batavia, IL 60510**

# LARGE HADRON COLLIDER
# Q3 - LQXC
# SHIPPING TRAVELER

## Reference Drawing(s):
## Q1/Q3 Shipping Fixture Final Assembly
## (ME-390729)
## Q3 Magnet Shipping Assembly
## (ME-390728)

| | |
|---|---|
| **Project/Task Number:** *300/1.1.1.6.2* | **Job Number:** *248* |
| **Released By:** *John Szostak* | **Magnet/Device Series:** *LQXC* |
| **Date Issued:** *8/5/2005 9:20:22 AM* | **Scanned Pages:** 46 |
| **Prepared by:** *B. Jensen, J. Szostak* | |

| Title | Signature | Date |
|---|---|---|
| TD / E&F Process Engineering | *Jamie Blowers*<br>Bob Jensen / Designee | *8/4/05* |
| TD / LHC Production Supervisor | *Jim Rife*<br>Jim Rife / Designee | *8/4/05* |
| TD / LHC Production Engineer | *Fred Nobrega*<br>Rodger Bossert / Designee | *8/4/05* |
| TD / LHC Project Engineer Cryostat | *Tom Nicol*<br>Tom Nicol / Designee | *8/4/05* |
| TD / LHC Project Physicist | *Andy Hocker*<br>Michael Lamm / Designee | *8/5/05* |
| TD / LHC Program Manager | *Jim Kerby*<br>Jim Kerby / Designee | *8/5/05* |

**Revision Page (1 of 2)**

| Revision | Step No. | Revision Description | TRR No. | Date |
|---|---|---|---|---|
| None | N/A | Initial Release | N/A | 1/14/05 |
| A | 1.6 | Added Step. "Protect the bellows during all stages of production." **DR No. HGQ-0500.** | 1706 | 2/28/05 |
| | 4.3 | Modified Step. Moved to after electrical Inspection per Production request. LQXC01. New Step 6.7. | | |
| | 4.4 | Modified Step. Moved to after electrical Inspection per Production request. LQXC01. New Step 6.8. | | |
| | 4.8 | Modified Step. Changed to "At the Non-IP End, measure and record the length of the conductor (in mm) from the 'flat' of the magnet dome to the end of the conductor and record in the box provided below. New Step 4.5. (+/- 10mm)" LQXC01. | | |
| | 5.3 | Modified Step. Moved to after electrical Inspection per Production request. LQXC01. New Step 6.9. | | |
| | 5.4 | Modified Step. Moved to after electrical Inspection per Production request. LQXC01. New Step 6.10. | | |
| | 5.7 | Modified Step. Changed to "At the IP End, measure and record the length of the conductor (in mm) from the 'flat' of the magnet dome to the end of the conductor and record in the box provided below. (+/- 10mm)" New step 5.5. LQXC01. | | |
| | 6.8 | Added Step. "Label the Leads "A" and "B" as per Figure 6.8-A below." | | |
| | 7.2 | Modified Step. Added "...and the Fixed End Flange (ME-390020)..." per LQXC01. | | |
| | 7.4.1 | Modified Step. Changed to "Install Cold Mass Collar (ME-390202) and secure using Bolt (MA-393191), and Plain Washers (MA-393060), and Lock Washers (MA-393061) per Q3 Shipping Restraint Assembly (ME-390250)." | | |
| | 7.5.1 | Modified Step. Changed to "Install Cold Mass Collar (ME-390202) and secure using Bolt (MA-393191), and Plain Washers (MA-393060), and Lock Washers (MA-393061) per Q3 Shipping Restraint Assembly (ME-390250)." | | |
| | 7.9 | Modified Step. Changed to "Install the Vinyl Flange Covers (MA-390491), (MA-390492), (MA-390493), (MA-390494), & the Alignment Fiducial Covers (MA-390495)." | | |
| | 7.10 | Modified Step. Changed to "Are Accelerometers (Shock Recorders) available for installation? ☐Yes - Install Accelerometers as per Responsible Authority and Figure 8.10-A. below. ☐No - Accelerometers are NOT available for installation." **DR No. HGQ-0512.** | | |
| | 7.11 | Modified Step. Added Note **"Example: If Serial No. at bottom of Traveler is: LQXC02 Stencil Serial No. should be:HCLQXC_001-FL000002"** | | |
| | 7.12 | Modified Step. Added Note **"Example: If Serial No. at bottom of Traveler is: LQXC02 Stencil Serial No. should be:HCLQXC_001-FL000002"** | | |
| | 9.3 | Modified Step. Changed MA-393384 to MA-393386, per production request. | | |
| B | 3.3 | Added Step. "Perform a Leak Check of the Q3 Cryostat Assembly." Per production request. | 1737 | 5/25/05 |
| | 4.3 | Modified Step. Added Note. **"Protect the Bellows during all stages of production."** | | |
| | 6.2 | Modified Step. Modified Electrical Table. Removed "Voltage Tap Serial Numbers". | | |
| | 7.2 | Modified Step. Added Note. **"Protect the Bellows during all stages of production."** | | |
| | 7.8 | Modified Step. Added Note. **"Protect the Bellows during all stages of production."** | | |

**Revision Page (2 of 2)**

| Revision | Step No. | Revision Description | TRR No. | Date |
|---|---|---|---|---|
| C | 3.3 | Removed Step. "Perform a Leak Check of the Q3 Cryostat Assembly." Performed at the end of Cryostat Final Assembly (333730). | 1764 | 8/4/05 |
| | 6.0 | Moved Step. Moved Electrical Inspection to after Purge of Magnet per production request. | | |
| | 9.3 | Modified Step. Changed to "Acquire and install the following parts." Per production request. | | |

**Ensure appropriate memos and specific instructions are placed with the traveler before issuing the sub traveler binder to production.**

1.0 General Notes

1.1 All steps that require a sign-off shall include the Technician/Technician(s)s first initial and full last name.

1.2 No erasures or white out will be permitted to any documentation. All incorrectly entered data shall be corrected by placing a single line through the error, initial and date the error before adding the correct data.

1.3 All Discrepancy Reports issued shall be recorded in the left margin next to the applicable step.

1.4 Personnel shall perform all tasks in accordance with current applicable ES&H guidelines and those specified within the step.

1.5 Cover the product/assembly with Green Herculite (Fermi stock 1740-0100) when not being serviced or assembled.

1.6 Protect the Bellows during all stages of production.

2.0 Parts Kit List

2.1 Attach the completed Parts Kit for this production operation to this traveler. Ensure that the serial number on the Parts Kit matches the serial number of this traveler. Verify that the Parts Kit received is complete.

J. Szostak
Process Engineering/Designee

8/5/05
Date

3.0 Magnet Electrical Preparation

3.1 Does magnet require a purge of compressed dry nitrogen ($N_2$)?

☒ YES, PURGE REQUIRED, Proceed to Step 3.2.

☐ NO, PURGE NOT REQUIRED, Proceed to Step 4.0.

STOP

Responsible Authority/Physicist — Date: 8/3/05

3.2 If YES box was checked in Step 3.1, perform a required purge for a minimum of 2.5 days (3 days maximum) at a flow rate of 5 CFH of $N_2$.

| | Purge Time | Purge Date | Purge Flow Rate |
|---|---|---|---|
| Start | 12:30 pm | 8/3/05 | 5 CFH |
| Finish | 2:30 pm | 8/5/05 | 5 CFH |

Technician(s) — Date: 8/5/05

4.0 Final Electrical Inspection

4.1 At the IP End, jumper the two 5Ka leads together. At the Non-IP End, measure the resistance of the 5Ka Busses and record below.

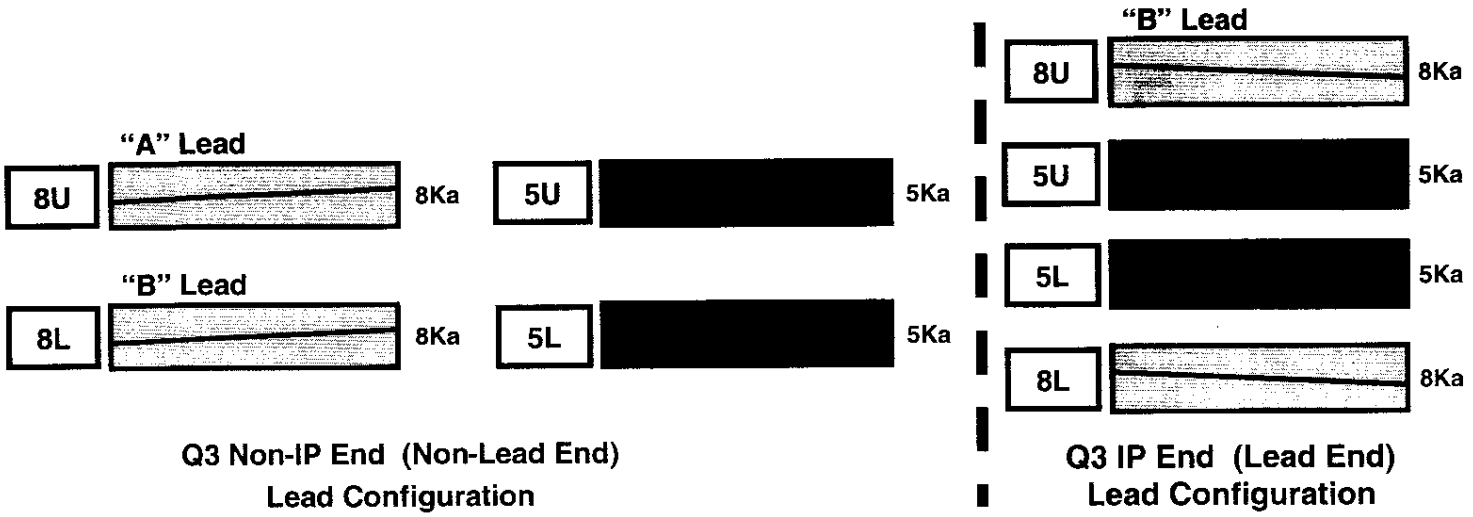


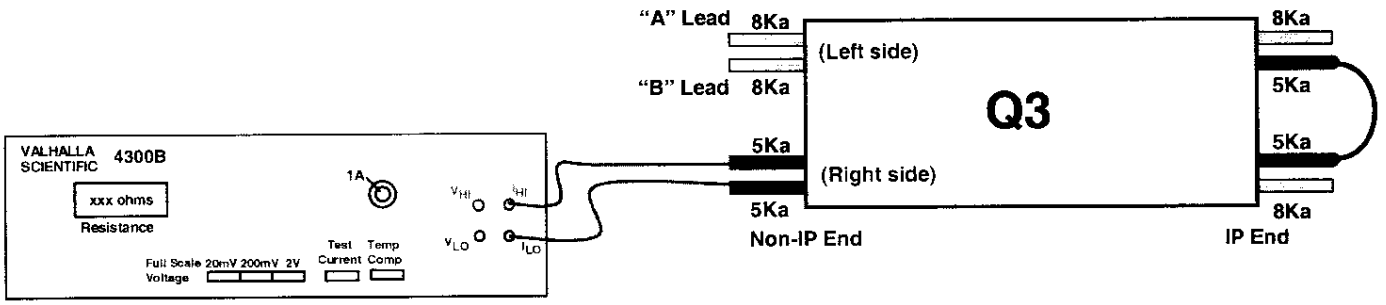


**Figure 4.1-A**

| Q3 Non-IP End | |
|---|---|
| **Lead** | **Resistance** |
| **5Ka Leads (Jumpered at IP End)** | 15.5 Ω |

Technician(s) [signature]

Date 8/6/05

4.2 Perform an electrical inspection on each of the Individual Quadrants and the Cold Mass. Refer to the Valhalla and Leader Free Standing Coil Measurement Procedure (ES-292306).

**To measure the Resistance of a Q3 Cold Mass:**

1. Use Valhalla Scientific 4300B digital micro-ohmmeter.
2. Set Test Current to 0.1 amp.
3. Set Scale to 2V full scale.
4. Turn temperature compensation on.
5. Turn test current off.
6. Connect $I_{HI}$ to "A" Lead as shown in figure 4.2-A.
7. Connect $I_{LO}$ to "B" Lead as shown in figure 4.2-A.
8. Turn test current on.
9. Connect $V_{HI}$ and $V_{LO}$ to voltage taps as shown in resistance table.
10. To measure Total with leads, connect $V_{HI}$ to "A" Lead and $V_{LO}$ to "B" Lead.
11. At the IP End, jumper the 8Ka leads as shown in Figure 4.2-A.
12. Read resistance and record in traveler.

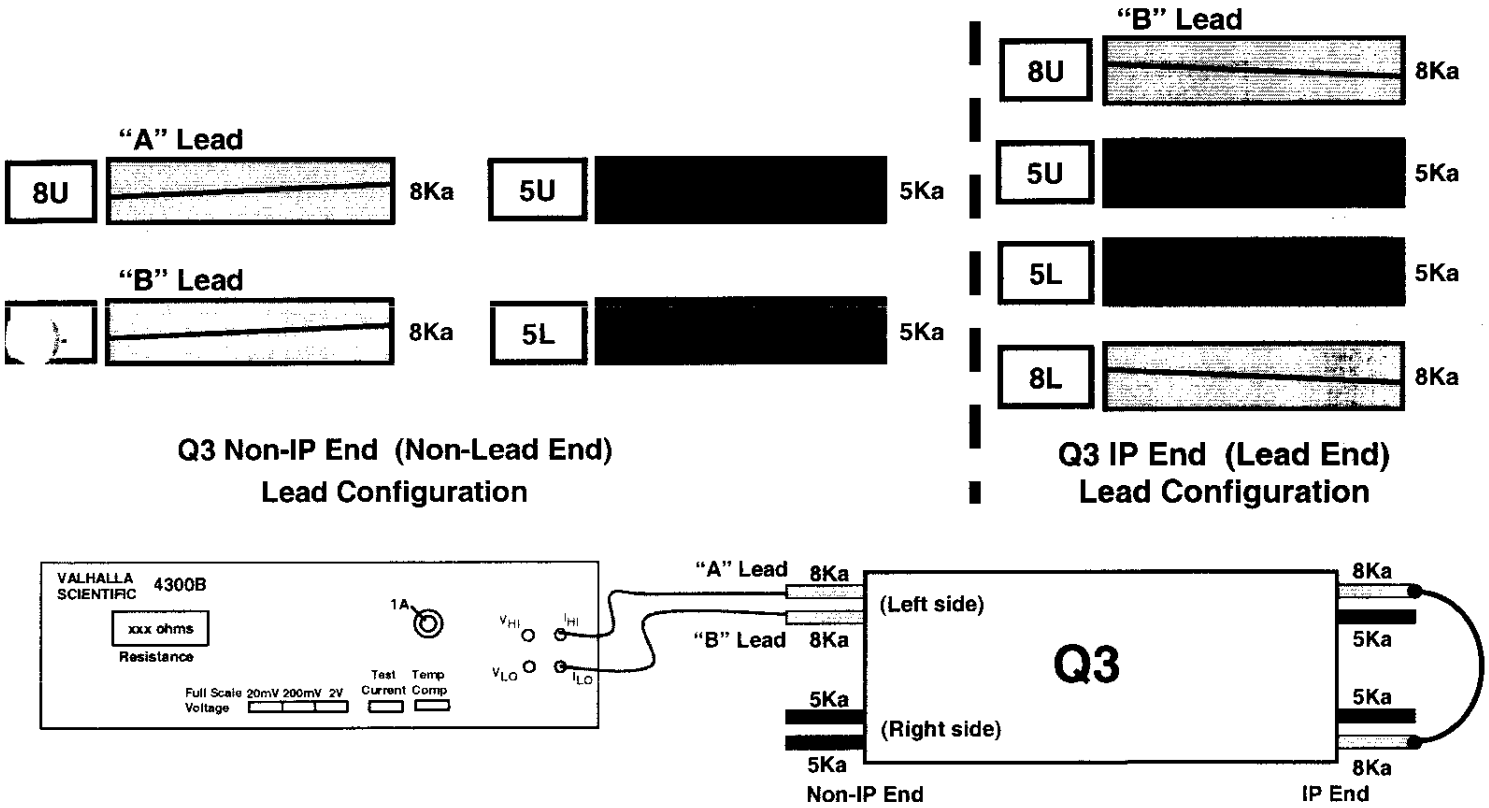


**Figure 4.2-A**

| (Q3) Resistance | | | | Nominal 3.35 to 3.45 Ω |
|---|---|---|---|---|
| | | | | Total Resistance |
| Connect | Fermi | CERN | KEK | |
| $V_{HI}$ | VTa1Q3 | EE1113 | a1 | 3.424 Ω |
| $V_{LO}$ | VTc1Q3 | EE1213 | c1 | |
| $V_{HI}$ | VTc1Q3 | EE1213 | c1 | 3.425 Ω |
| $V_{LO}$ | VTb1Q3 | EE1313 | b1 | |
| $V_{HI}$ | VTa1Q3 | EE1113 | a1 | 6.849 Ω |
| $V_{LO}$ | VTb1Q3 | EE1313 | b1 | |

| | | Total Resistance with Leads |
|---|---|---|
| | | Nominal 6.75 to 6.85 Ω |
| $V_{HI}$ | "A" Power Lead | 6.864 Ω |
| $V_{LO}$ | "B" Power Lead | |

A Gould
Technician(s)

8/6/05
Date

Check resistance of Redundant Voltage Taps.

| Q3 Redundant Voltage Taps | | | | Nominal 3.35 to 3.45 Ω |
|---|---|---|---|---|
| Connect | Fermi | CERN | KEK | Resistance |
| $V_{HI}$ | VTa2Q3 | EE1123 | a2 | 3.424 Ω |
| $V_{LO}$ | VTc2Q3 | EE1223 | c2 | |
| $V_{HI}$ | VTc2Q3 | EE1223 | c2 | 3.425 Ω |
| $V_{LO}$ | VTb2Q3 | EE1323 | b2 | |

A Gould
Technician(s)

8/6/05
Date

**To measure Ls and Q of a Q3 Cold Mass:**

1. Use Agilent 4263B LCR Meter.
2. Turn power on by pushing line button. Wait 30 seconds until display screen is lit.
3. Recall program #1. To do this, push recall (Rcl), then push #1, then push Enter.
4. Push Auto/Hold button to release hold.
5. Verify that the frequency displayed in the upper right corner of the display screen is 1000 Hz and the level recorded in the lower right corner of the display screen is 1V or 1000 mV.
6. Connect $H_{cur}$ to "A" power lead as shown in figure 4.2-B
7. Connect $L_{cur}$ to "B" power lead as shown in figure 4.2-B.
8. Connect $H_{pot}$ and $L_{pot}$ buttons to voltage taps as shown below.
9. Read Ls and Q from display and record in table.

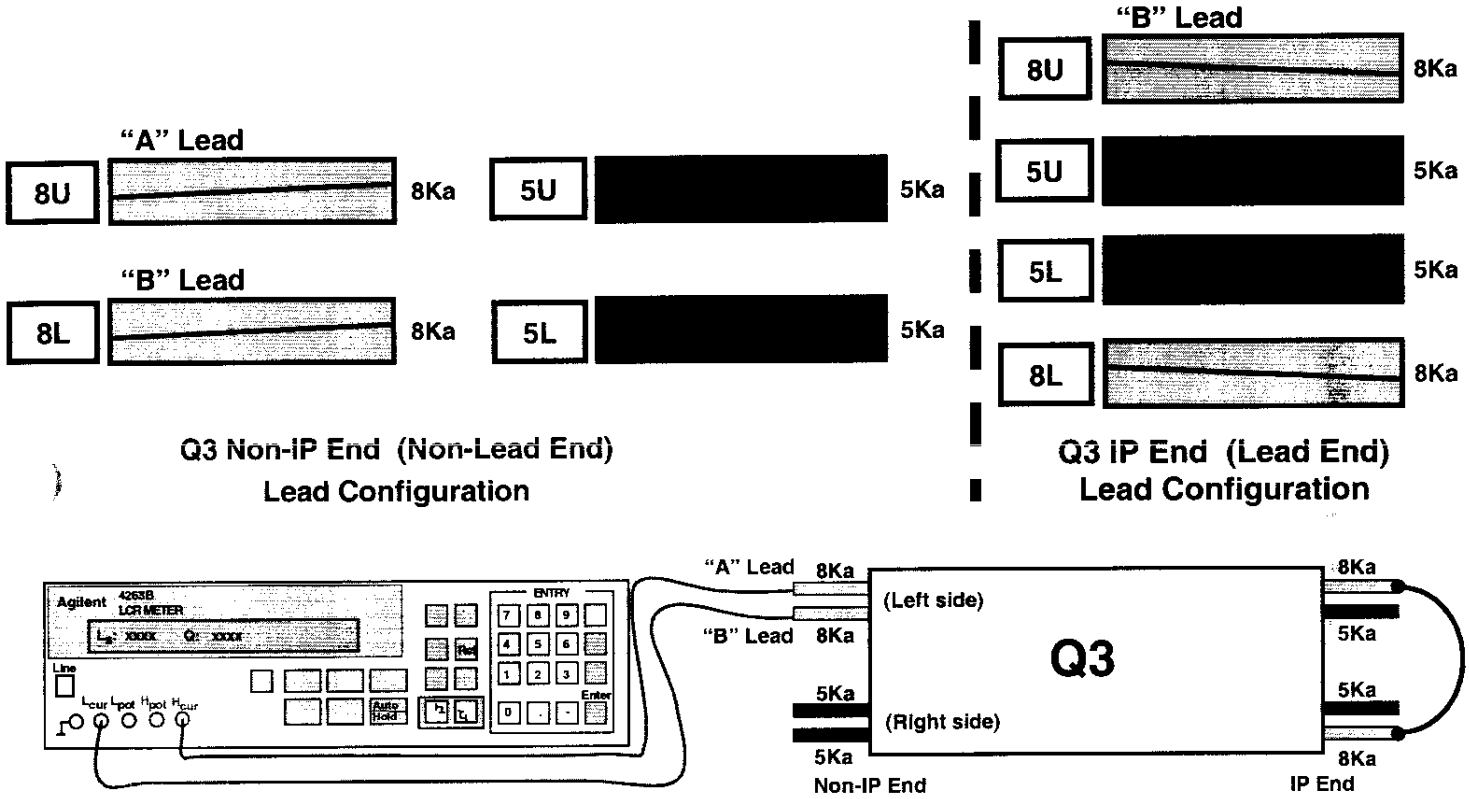


**Figure 4.2-B**

| (Q3) Inductance | | | | Nominal 15 to 16 mH |
|---|---|---|---|---|
| | | | | Total Inductance |
| Connect | Fermi | CERN | KEK | |
| $H_{POT}$ | VTa1Q3 | EE1113 | a1 | 15.198 mH |
| $L_{POT}$ | VTc1Q3 | EE1213 | c1 | |
| $H_{POT}$ | VTc1Q3 | EE1213 | c1 | 15.251 mH |
| $L_{POT}$ | VTb1Q3 | EE1313 | b1 | |

| | | | | Nominal 30 to 32 mH |
|---|---|---|---|---|
| | | | | Total Inductance |
| $H_{POT}$ | VTa1Q3 | EE1113 | a1 | 30.443 mH |
| $L_{POT}$ | VTb1Q3 | EE1313 | b1 | |

| (Q3) Q-Factor | | | | Nominal 1.0 to 1.2 |
|---|---|---|---|---|
| | | | | Total Q |
| Connect | Fermi | CERN | KEK | |
| $H_{POT}$ | VTa1Q3 | EE1113 | a1 | 1.2 |
| $L_{POT}$ | VTc1Q3 | EE1213 | c1 | |
| $H_{POT}$ | VTc1Q3 | EE1213 | c1 | 1.1x |
| $L_{POT}$ | VTb1Q3 | EE1313 | b1 | |

| | | | | Nominal 1.0 to 1.2 |
|---|---|---|---|---|
| | | | | Total Inductance |
| $H_{POT}$ | VTa1Q3 | EE1113 | a1 | 1.1 |
| $L_{POT}$ | VTb1Q3 | EE1313 | b1 | |

Technician(s)

8/6/05
Date

**To measure the resistance of a Thermometer (RTD):**

1. Use Hewlett Packard HP3457A digital multimeter.
2. Record temperature of building within +/- 5 degrees.
3. Press line button to turn line on.
4. Connect wires as shown in Figure below.
   U+ (Black) to Sense HI
   I+ (Yellow) to Input HI
   U- (Red) to Sense LO
   I- (Green) to Input LO
5. Push blue button (function key) once.
6. Push OHMF button.
7. Verify arrow in readout is above the 4WΩ (meaning a 4 wire resistance measurement).
8. Read resistance in ohms and record in traveler.

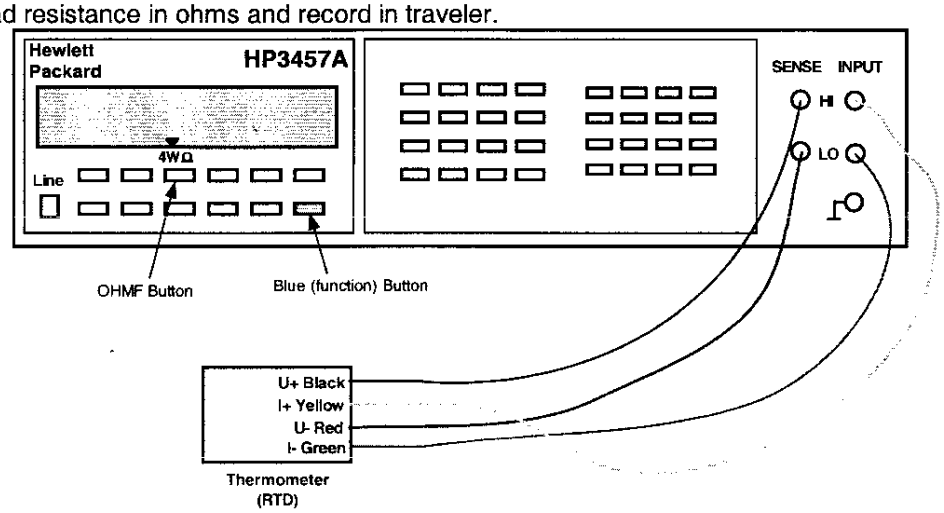


**To measure the resistance of a Cryogenic (Warm-up) Heater**

1. Use Hewlett Packard HP3457A digital multimeter.
2. Record temperature of building within +/- 5 degrees.
3. Press line button to turn line on.
4. Connect wires as shown in Figure below.
5. Push blue button (function key) once.
6. Push OHMF button.
7. Verify arrow in readout is above the 4WΩ (meaning a 4 wire resistance measurement).
   **Note: Although this is technically a 4 wire measurement, it is effectively a 2 wire measurement, since there are only 2 wires connected to each heater.**
8. Read resistance in ohms and record in traveler.

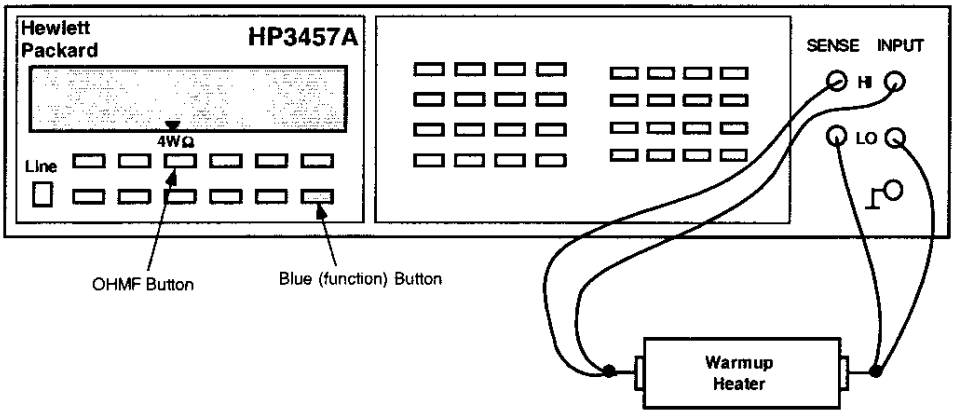

| Q3 - RTD's and Cryogenic (warm-up) Heaters | | | | |
|---|---|---|---|---|
| Temperature of Building (± 5°): 78° | | | | |
| **Component** | **Fermi** | **CERN** | **Range** | **Resistance** |
| Q3 Cryogenic (warm-up) Heater (LE) - wire at top (CERN #1 I+) | W1aQ3 | EH8313+ | 16 to 18.5 Ω | 17.753 Ω |
| Q3 Cryogenic (warm-up) Heater (LE) - wire at bottom (CERN #1 I-) | W2aQ3 | EH8313- | | |
| Q3 Cryogenic (warm-up) Heater (Non-LE) - wire at top (CERN #2 I+) | W1bQ3 | EH8323+ | 16 to 18.5 Ω | 17.345 Ω |
| Q3 Cryogenic (warm-up) Heater (Non-LE) - wire at bottom (CERN #2 I-) | W2bQ3 | EH8323- | | |

**Note(s):**

**Record the appropriate RTD Serial Numbers and Mfr. Resistance in the table below.**

| RTD Serial No. | Fermi | CERN | Measured Ω | Mfr. Resistance (Expedition) |
|---|---|---|---|---|
| Q3 RTD, primary: | TaQ3 | TT8313 | 64.622 | 62.819 Ω |
| Q3 RTD, redundant: | TbQ3 | TT8323 | 66.658 | 64.961 Ω |

Technician(s) _____ Date 8/6/05

Using the Hewlett Packard HP3457A digital multimeter, measure the Protection (Strip) Heater Resistance for Q3.

| Q3 Protection (Strip) Heater Resistance | | | | | |
|---|---|---|---|---|---|
| Fermi | CERN | KEK | Description | Limit | Resistance |
| H1aQ3 | YT1113+ | HA1 | Circuit A | 28 to 32 Ω | 30.218 Ω |
| H2aQ3 | YT1113- | HA2 | | | |
| H1bQ3 | YT1123+ | HB1 | Circuit B | 28 to 32 Ω | 30.293 Ω |
| H2bQ3 | YT1123- | HB2 | | | |

Technician(s) _____ Date 8/6/05

4.3 Using the Valhalla 4300B, connect 10mA applied voltage thru the corrector Power Leads. Measure Resistance and record in the table below. Record Initial resistance of Corrector Element and record below.

**Corrector Bus Leads**

| | | | | | | | | | |
|---|---|---|---|---|---|---|---|---|---|
| | V3A | V3B | H3A | H3B | B3A | B3B | B6A | B6B | |
| | V2A | V2B | H2A | H2B | B4A | B4B | A4A | A4B | |
| | V1A | V1B | H1A | H1B | A2A | A2B | A3A | A3B | |

**(View Looking from DFBX into Q3 – Non-IP End)**

| Corrector Assembly | Corrector Element | Readout Labels | | Power Labels $I_{HI}$ | Power Labels $I_{LO}$ | Resistance | Initial Resistance |
|---|---|---|---|---|---|---|---|
| MQSX | MQSX | A2A | EE8223 | A2A | A2B | .005 | MQSX |
| | | EE8223 | A2B | | | 7.693 | |
| | | A2A | A2B | | | 7.745 | |
| MCBXA | MCBXV | V3A | EE8113 | V3A | V3B | .001 | MCBXV |
| | | EE8113 | V3B | | | 17.603 | |
| | | V3A | V3B | | | 17.613 | |
| | MCBXH | H3A | EE8123 | H3A | H3B | .0009 | MCBXH |
| | | EE8123 | H3B | | | 21.63 | |
| | | H3A | H3B | | | 21.64 | |
| | MCTX | B6A | EE8613 | B6A | B6B | .01 | MCTX |
| | | EE8613 | B6B | | | 99.07 | |
| | | B6A | B6B | | | 99.08 | |
| | MCSX | B3A | EE8313 | B3A | B3B | .009 | MCSX |
| | | EE8313 | B3B | | | 28.07 | |
| | | B3A | B3B | | | 28.07 | |
| MCSOX | MCOSX | A4A | EE8423 | A4A | A4B | .007 | MCOSX |
| | | EE8423 | A4B | | | 11.689 | |
| | | A4A | A4B | | | 11.695 | |
| | MCOX | B4A | EE8413 | B4A | B4B | .005 | MCOX |
| | | EE8413 | B4B | | | 12.860 | |
| | | B4A | B4B | | | 12.865 | |
| | MCSSX | A3A | EE8323 | A3A | A3B | .005 | MCSSX |
| | | EE8323 | A3B | | | 13.333 | |
| | | A3A | A3B | | | 13.338 | |

Technician(s) _____ Date 8/6/05

4.4 Check Q1 & Q2 Instrumentation Bus Wires for Continuity.

# Table 4.4

| Module | Pin | Fermi | CERN | KEK | Description | Done |
|---|---|---|---|---|---|---|
| M2 | 1 | VTa1Q1 | EE1111 | a1 | Q1 Lead Voltage Tap "a" , primary | ✓ |
| M2 | 2 | VTa2Q1 | EE1121 | a2 | Q1 Lead Voltage Tap "a", redundant | ✓ |
| M2 | 3 | VTc1Q1 | EE1211 | c1 | Q1 Center Voltage Tap "c", primary | ✓ |
| M2 | 4 | VTc2Q1 | EE1221 | c2 | Q1 Center Voltage Tap "c", redundant | ✓ |
| M2 | 5 | VTb1Q1 | EE1311 | b1 | Q1 Lead Voltage Tap "b", primary | ✓ |
| M3 | 1 | VTc1Q2a | EE1212 | | Q2a Center Voltage Tap "c", primary | ✓ |
| M3 | 3 | VTa2Q2a | EE1122 | | Q2a lead Voltage Tap "a", redundant | ✓ |
| M3 | 4 | VTa1Q2a | EE1112 | | Q2a Lead Voltage Tap "a", primary | ✓ |
| M3 | 5 | VTb2Q1 | EE1321 | b2 | Q1 Lead Voltage Tap "b", redundant | ✓ |
| M4 | 1 | VTc2Q2a | EE1222 | | Q2a Center Voltage Tap "c", redundant | ✓ |
| M4 | 3 | VTb1Q2a | EE1312 | | Q2a Lead Voltage Tap "b", primary | ✓ |
| M4 | 4 | VTb2Q2a | EE1322 | | Q2a Lead Voltage Tap "b", redundant | ✓ |
| M4 | 5 | VTb1Q2b | EE1612 | | Q2b lead Voltage Tap "b", primary | ✓ |
| M5 | 2 | VTc2Q2b | EE1522 | | Q2b Center Voltage Tap "c", redundant | ✓ |
| M5 | 3 | VTc1Q2b | EE1512 | | Q2b Center Voltage Tap "c", primary | ✓ |
| M5 | 5 | VTb2Q2b | EE1622 | | Q2b Lead Voltage Tap "b" redundant | ✓ |
| M6 | 1 | VTa1Q2b | EE1412 | | Q2b Lead Voltage Tap "a", primary | ✓ |
| M6 | 2 | VTa2Q2b | EE1422 | | Q2b Lead Voltage Tap "a", redundant | ✓ |
| M8 | 1 | VTH1 | EE8121 | | Corrector voltage tap Q1-H1 (skew dipole) (on MCBX, MCBXH, A+ lead) | ✓ |
| M8 | 2 | VTV1 | EE8111 | | Corrector voltage tap Q1-V1 (normal dipole) (on MCBX, MCBXV A+ lead) | ✓ |
| M8 | 3 | VTH2 | EE8122 | | Corrector voltage tap Q2-H2 (skew dipole) (on MCBX, MCBXH, A+ lead) | ✓ |
| M8 | 4 | VTV2 | EE8112 | | Corrector voltage tap Q2-V2 (normal dipole) (on MCBX, MCBXV, A+ lead) | ✓ |
| M10 | 1 | W1aQ1 | EH8311+ | | Q1 Cryogenic Heater lead end - wire at top (CERN #1 I+) | ✓ |
| M10 | 2 | W2aQ1 | EH8311- | | Q1 Cryogenic Heater lead end - wire at bottom (CERN #1 I-) | ✓ |
| M10 | 3 | W1bQ1 | EH8321+ | | Q1 Cryogenic Heater non-lead end - wire at top (CERN #2 I+) | ✓ |
| M10 | 4 | W2bQ1 | EH8321- | | Q1 Cryogenic Heater non-lead end - wire at bottom (CERN #2 I-) | ✓ |
| M11 | 1 | W1aQ2A | EH8312+ | | Q2A Cryogenic Heater lead end - wire toward cold mass end plate (CERN #1 I+) | ✓ |
| M11 | 2 | W2aQ2A | EH8312- | | Q2A Cryogenic Heater lead end - wire toward cold mass mag center (CERN #1 I-) | ✓ |
| M11 | 3 | W1bQ2A | EH8322+ | | Q2A Cryogenic Heater non-lead end- wire toward cold mass end plate (CERN #2 I+) | ✓ |

# Table 4.4

| Module | Pin | Fermi | CERN | KEK | Description | Done |
|---|---|---|---|---|---|---|
| M11 | 4 | W2bQ2A | EH8322- | | Q2A Cryogenic Heater non-lead end- wire toward cold mass mag center (CERN #2 I-) | ✓ |
| M12 | 1 | W1aQ2B | EH8332+ | | Q2B Cryogenic Heater lead end - wire toward cold mass end plate (CERN #1 I+) | ✓ |
| M12 | 2 | W2aQ2B | EH8332- | | Q2B Cryogenic Heater lead end - wire toward cold mass mag center (CERN #1 I-) | ✓ |
| M12 | 3 | W1bQ2B | EH8342+ | | Q2B Cryogenic Heater non-lead end- wire toward cold mass end plate (CERN #2 I+) | ✓ |
| M12 | 4 | W2bQ2B | EH8342- | | Q2B Cryogenic Heater non-lead end- wire toward cold mass mag center (CERN #2 I-) | ✓ |
| M14 | 1 | H1aQ1 | YT1111+ | HA1 | Q1 Protection (Strip) Heater, ("a" circuit) (CERN lead #1+) | ✓ |
| M14 | 3 | H2aQ1 | YT1111- | HA2 | Q1Protection (Strip) Heater, ("a" circuit) (CERN lead #1-) | ✓ |
| M14 | 5 | H1bQ1 | YT1121+ | HB1 | Q1 Protection (Strip) Heater, ("b" circuit) (CERN lead #2+) | ✓ |
| M15 | 2 | H1aQ2a | YT1112+ | | Q2a Protection (Strip) Heater, 1-4 & 2-3 circuit (FNAL lead A+) (CERN lead #1+) | ✓ |
| M15 | 4 | H2bQ1 | YT1121- | HB2 | Q1 Protection (Strip) Heater, ("b" circuit) (CERN lead #2-) | ✓ |
| M16 | 1 | H2aQ2a | YT1112- | | Q2a Protection (Strip) Heater, 1-4 & 2-3 circuit (FNAL lead A-) (CERN lead #1-) | ✓ |
| M16 | 3 | H1bQ2a | YT1122+ | | Q2a Protection (Strip) Heater, 1-2 & 3-4 circuit (FNAL lead B+) (CERN lead#2+) | ✓ |
| M16 | 5 | H2bQ2a | YT1122- | | Q2a Protection (Strip) Heater, 1-2 & 3-4 circuit (FNAL lead B-) (CERN lead #2-) | ✓ |
| M17 | 2 | H2aQ2b | YT1132- | | Q2b Protection (Strip) Heater, 1-4 & 2-3 circuit (FNAL lead A-) (CERN lead #1-) | ✓ |
| M17 | 4 | H1aQ2b | YT1132+ | | Q2b Protection (Strip) Heater, 1-4 & 2-3 circuit (FNAL lead A+) (CERN lead #1+) | ✓ |
| M18 | 1 | H1bQ2b | YT1142+ | | Q2b Protection (Strip) Heater, 1-2 & 3-4 circuit (FNAL lead B+) (CERN lead#2+) | ✓ |
| M18 | 3 | H2bQ2b | YT1142- | | Q2b Protection (Strip) Heater, 1-2 & 3-4 circuit (FNAL lead B-) (CERN lead #2-) | ✓ |
| M20 | 1 | TaQ1_I+ | TT8311 I+ | | Q1 RTD, primary Wire color: Yellow | ✓ |
| M20 | 2 | TaQ1_I- | TT8311 I- | | Q1 RTD, primary Wire color: Green | ✓ |
| M20 | 3 | TaQ1_V+ | TT8311 U+ | | Q1 RTD, primary Wire color: Black | ✓ |
| M20 | 4 | TaQ1_V- | TT8311 U- | | Q1 RTD, primary Wire color: Red | ✓ |
| M20 | 5 | TbQ1_I+ | TT8321 I+ | | Q1 RTD, redundant: Wire color: Yellow | ✓ |
| M20 | 6 | TbQ1_I- | TT8321 I- | | Q1 RTD, redundant: Wire color: Green | ✓ |
| M20 | 11 | TbQ1_V+ | TT8321 U+ | | Q1 RTD, redundant: Wire color: Black | ✓ |
| M20 | 10 | TbQ1_V- | TT8321 U- | | Q1 RTD, redundant: Wire color: Red | ✓ |
| M20 | 9 | TaQ2a_I+ | TT8312 I+ | | Q2a RTD, primary Wire color: Yellow | ✓ |
| M20 | 8 | TaQ2a_I- | TT8312 I- | | Q2a RTD, primary Wire color: Green | ✓ |

# Table 4.4

| Module | Pin | Fermi | CERN | KEK | Description | Done |
|---|---|---|---|---|---|---|
| M20 | 7 | TaQ2a_V+ | TT8312 U+ | | Q2a RTD, primary Wire color: Black | ✓ |
| M20 | 12 | TaQ2a_V- | TT8312 U- | | Q2a RTD, primary Wire color: Red | ✓ |
| M20 | 13 | TbQ2a_I+ | TT8322 I+ | | Q2a RTD, redundant: Wire color: Yellow | ✓ |
| M20 | 14 | TbQ2a_I- | TT8322 I- | | Q2a RTD, redundant: Wire color: Green | ✓ |
| M20 | 15 | TbQ2a_V+ | TT8322 U+ | | Q2a RTD, redundant: Wire color: Black | ✓ |
| M20 | 16 | TbQ2a_V- | TT8322 U- | | Q2a RTD, redundant: Wire color: Red | ✓ |
| M21 | 1 | TaQ2b_I+ | TT8332 I+ | | Q2b RTD, primary Wire color: Yellow | ✓ |
| M21 | 2 | TaQ2b_I- | TT8332 I- | | Q2b RTD, primary Wire color: Green | ✓ |
| M21 | 3 | TaQ2b_V+ | TT8332 U+ | | Q2b RTD, primary Wire color: Black | ✓ |
| M21 | 4 | TaQ2b_V- | TT8332 U- | | Q2b RTD, primary Wire color: Red | ✓ |
| M21 | 5 | TbQ2b_I+ | TT8342 I+ | | Q2b RTD, redundant: Wire color: Yellow | ✓ |
| M21 | 6 | TbQ2b_I- | TT8342 I- | | Q2b RTD, redundant: Wire color: Green | ✓ |
| M21 | 11 | TbQ2b_V+ | TT8342 U+ | | Q2b RTD, redundant: Wire color: Black | ✓ |
| M21 | 10 | TbQ2b_V- | TT8342 U- | | Q2b RTD, redundant: Wire color: Red | ✓ |

Technician(s) — Date: 8/6/05

STOP

Responsible Authority/Physicist — Date: 8-AUG-2005

STOP

4.5 Does Magnet require Hipotential Testing?

☒ YES, HIPOT REQUIRED, Proceed to Step 4.6.

Maximum Voltage: 1500

☐ NO, HIPOT NOT REQUIRED, Proceed to Step 7.0.

Responsible Authority/Physicist — Date: 8/5/05

4.6 Hipot according to table below. Hipot to value recorded in Step 4.5. Maximum leakage is 3μA.

STOP

**Have Crew Chief verify setup and sign below before continuing.**

Crew Chief — Date: 8-5-05

| Hipot Heaters to Coil and Ground. | | | |
|---|---|---|---|
| **High Potential** | **Grounded** | **Floating** | **Leakage** |
| All Strip Heaters | Magnet Coils, Corrector Coils, Yoke, RTD's and Warm-up Heaters | Nothing | 615nA |

| Hipot Coil to Heaters and Ground | | | |
|---|---|---|---|
| **High Potential** | **Grounded** | **Floating** | **Leakage** |
| All Magnet Coils | Corrector Coils, Strip Heaters, Yoke, RTD's and Warm-up Heaters | Nothing | 328nA |

Technician(s) — Date: 8/5/05

Responsible Authority/Physicist — Date: 8/5/05

4.7 At the Non-IP End, insulate the two 8Ka Bus Leads and the two 5Ka Bus Leads using approved methods.

**Note(s):**

**These leads must be insulated using approved methods (refer to ME-369900), first as an individual lead, then insulated as pairs to prevent 'shorting' to the other leads**

Technician(s) _____ Date 8/11/05

4.8 Label the Leads "A" and "B" as per Figure 4.8-A below.

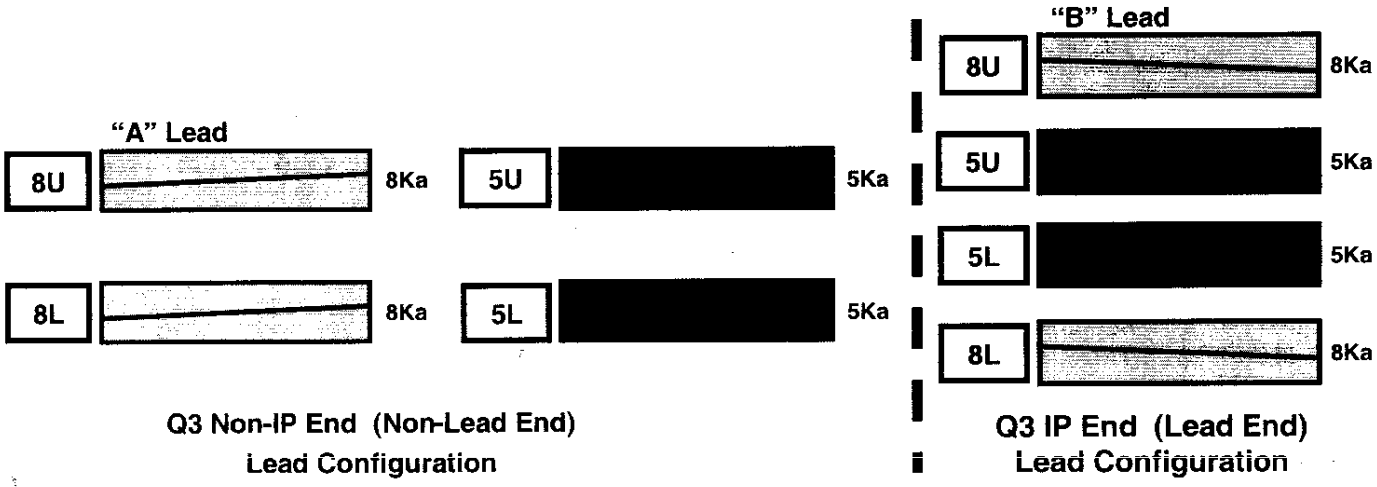


# Figure 4.8-A

Technician(s) _____ Date 8-11-05

4.9 At the Non-IP End, insulate the magnet leads using ¾" Black Shrink Tubing (MA-318797). Ensure that the entire length of magnet leads are covered before heat shrinking.

Technician(s) _____ Date 8/11/05

4.10 At the IP End, insulate the two 8Ka Bus Leads and the two 5Ka Bus Leads using approved methods.

**Note(s):**

**These leads must be insulated using approved methods (refer to ME-369900), first as an individual lead, then insulated as pairs to prevent 'shorting' to the other leads**

Technician(s) _____ Date 8/11/05

4.11 At the IP End, insulate the magnet leads using ¾" Black Shrink Tubing (MA-318797). Ensure that the entire length of magnet leads are covered before heat shrinking.

Technician(s) _____ Date 8/11/05

5.0 Magnet End Preparation (Non IP End)

5.1 Separate, identify, and label the Non-IP Magnet End Corrector leads as per (ME-369900 (sheet 4 of 5)) and figure 5.2-A below (Next Step).

EA

Technician(s) _____ Date 8-11-05

5.2 Locate and identify the two 8KA Bus Leads and the two 5KA Bus Leads.

**Corrector Bus Leads**

| | | | | | | | | | |
|---|---|---|---|---|---|---|---|---|---|
| | V3A | V3B | H3A | H3B | B3A | B3B | B6A | B6B | |
| | V2A | V2B | H2A | H2B | B4A | B4B | A4A | A4B | |
| | V1A | V1B | H1A | H1B | A2A | A2B | A3A | A3B | |

**(View Looking from DFBX into Q3)**

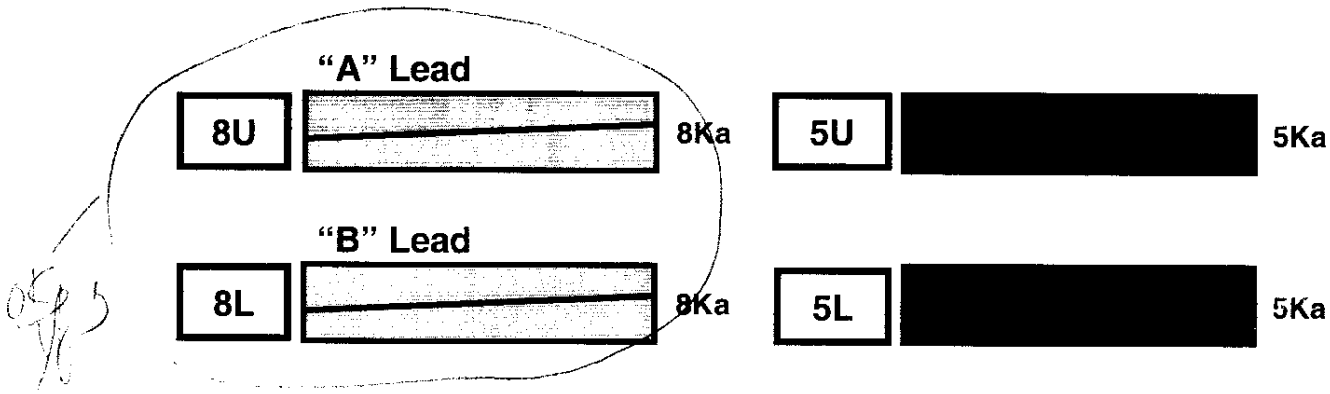


**Q3 Non-IP End (Non-Lead End)**
**Lead Configuration**

# Figure 5.2-A

EA

Technician(s) _____ Date 8-11-05

CREW CHIEF _____ DATE 8/11/05

5.3 At the Non-IP End, move leads back and forth to ensure that the leads have sufficient travel for thermal expansion. Leads should have travel shown in figure below. From inside the bellows, measure from the outer edge of the Bellows to Tube adapter ring inward toward the magnet center.

**Note(s):**

**Protect the Bellows during all stages of production.**

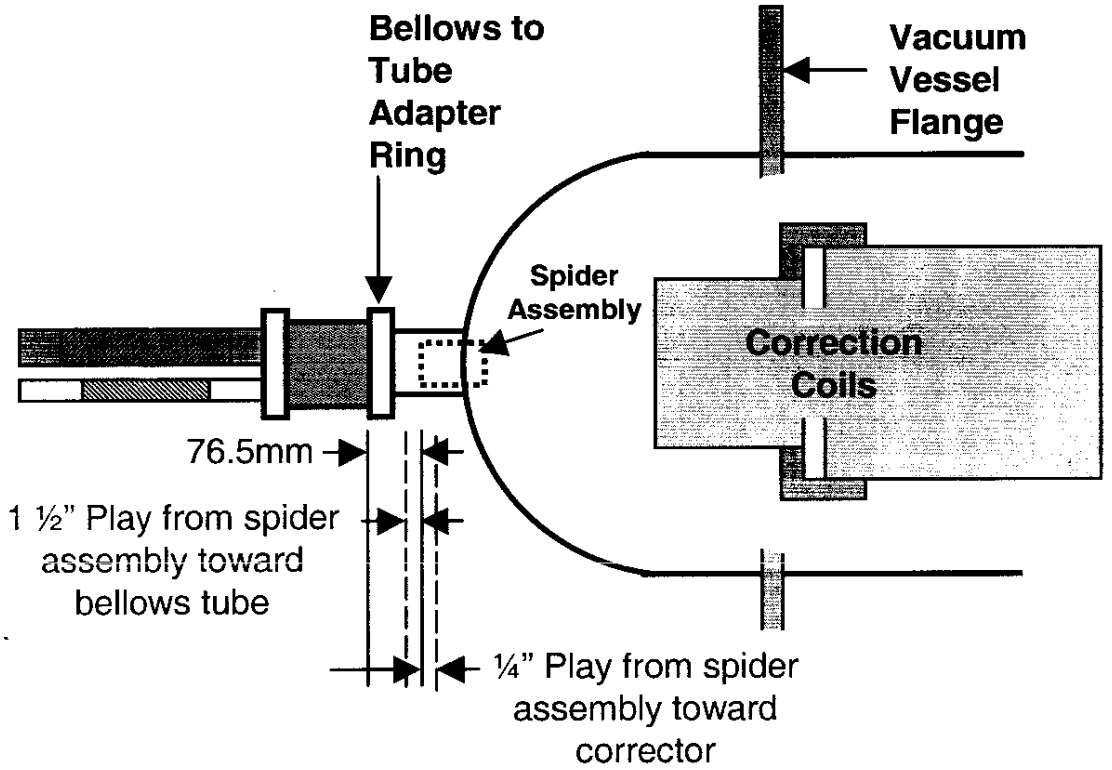


# Non-IP End of Q3

## Figure 5.3-A

**Record Travel Distance:** 1 3/4 "

Technician(s) _____ Date 8/11/05

STOP

5.4 At the Non-IP End, ensure the conductor and Spider assembly are in the "set" position (76.5mm) before taking measurement for step 5.5.

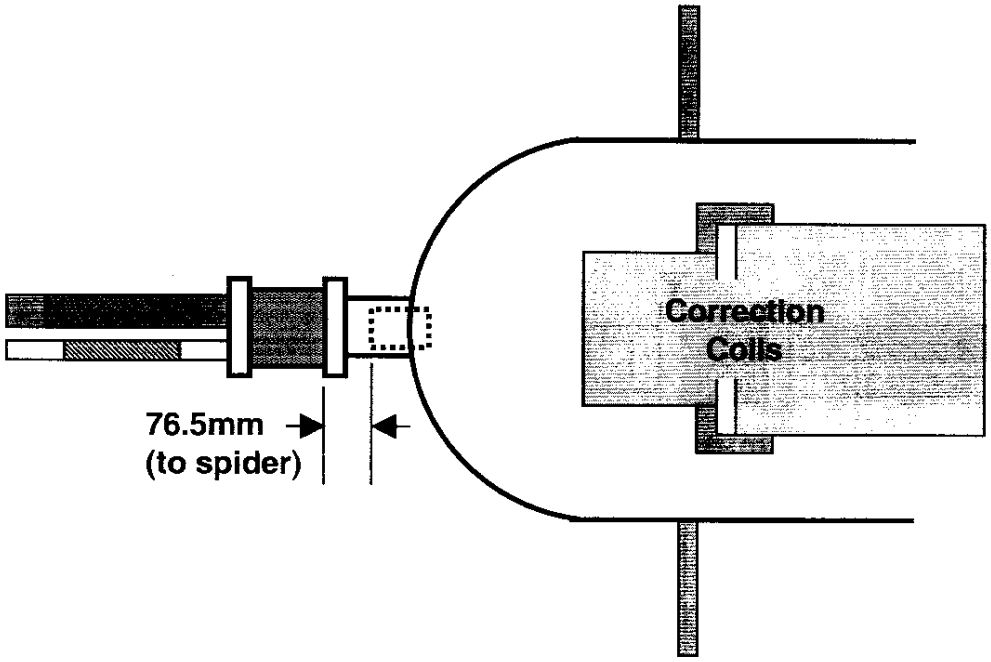


# Non-IP End of Q3

## Figure 5.4-A

Crew Chief _____ Date 8-10-05

5.5 At the Non-IP End, measure and record the length of the conductor (in mm) from the 'flat' of the magnet dome to the end of the conductor and record in the box provided below. (+/- 10mm)

**Note(s):**
**The 740 mm dimension for the magnet leads includes an approximate 30 mm of extra buffer cable for installation tolerances.**

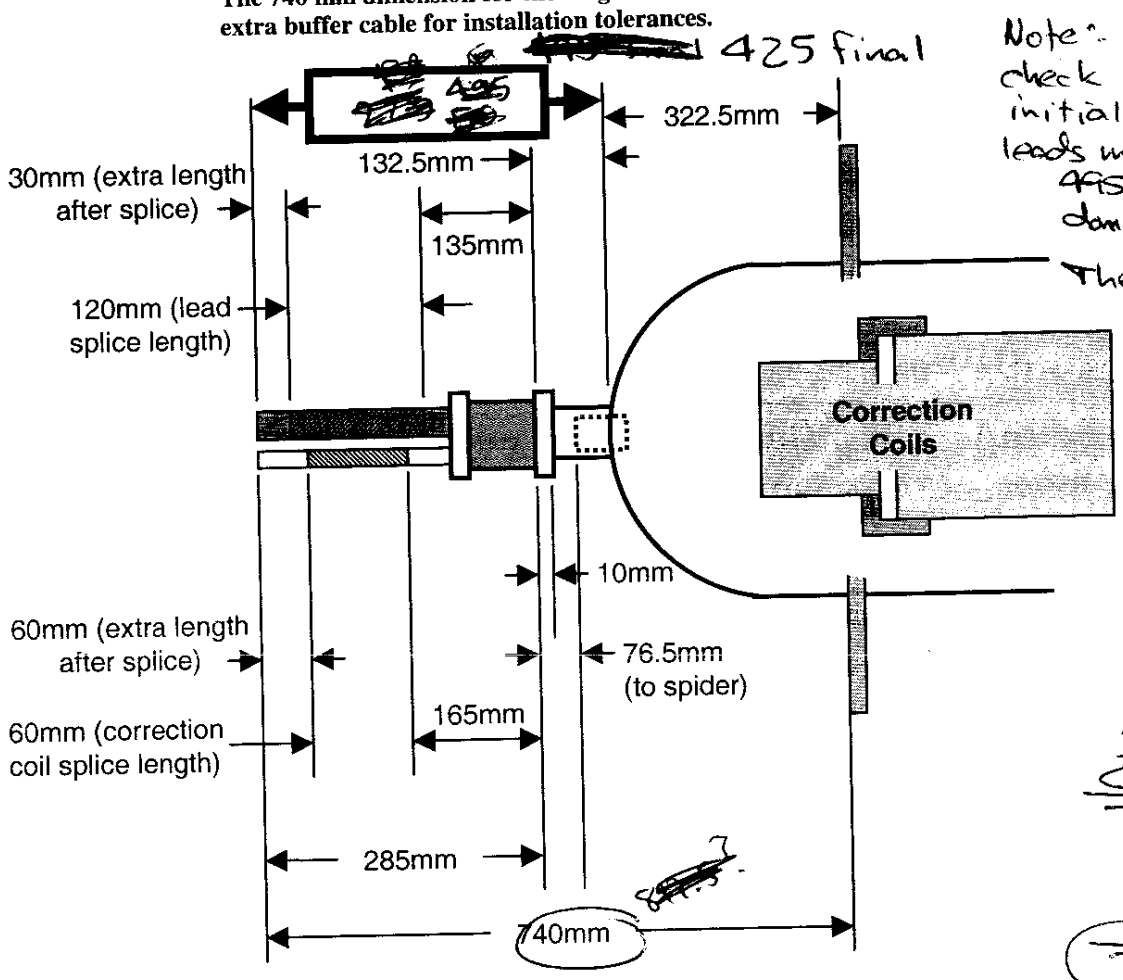


Note: when this check was initially made, leads measured 445 mm from dome flat. They were trimmed, and finally measured to be 425mm

425.0
322.5
747.5
OK

# Non-IP End of Q3

## Figure 5.5-A

Technician(s) _____ Date 8-11-05

STOP

5.6 Verify Step 5.3 (Spider Assembly measurement) and 5.5 (Conductor measurement) are acceptable.

Responsible Authority/Physicists _____ Date 8-10-05

6.0 Magnet End Preparation (IP End)

6.1 Separate, identify, and label the IP Magnet End Corrector leads as per (ME-369900 (sheet 4 of 5)) and figure 6.2-A below (Next Step).

Technician(s) Date 8/11/05

6.2 Locate and identify the two 8KA Bus Leads and the two 5KA Bus Leads.

Checked 7/13

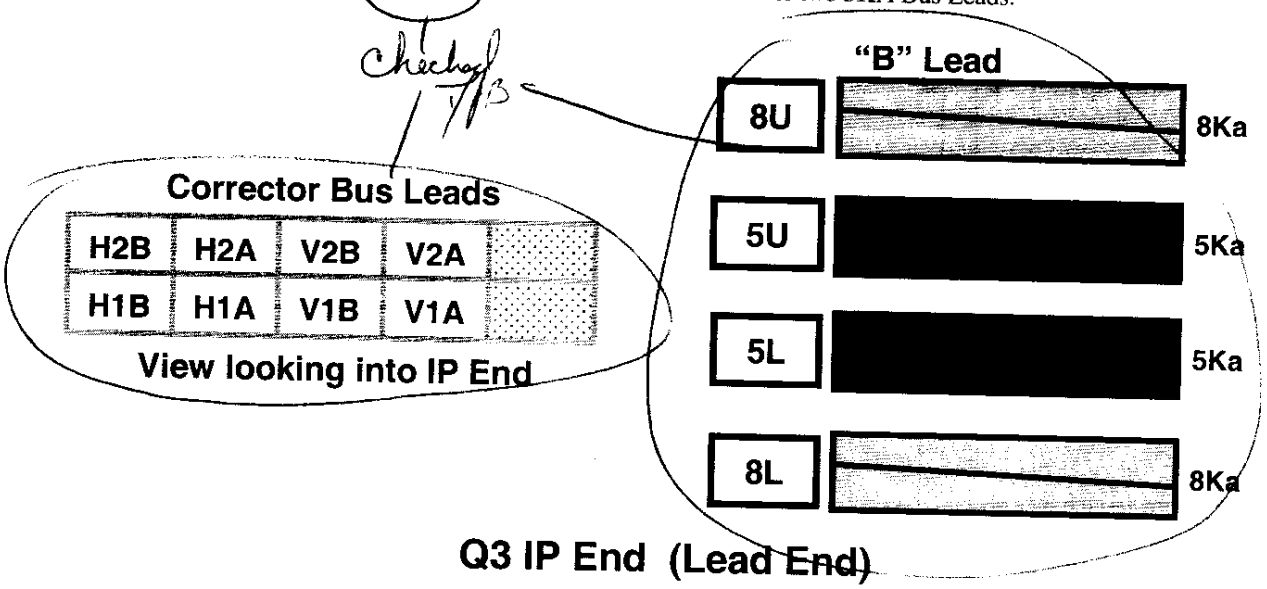


**Q3 IP End (Lead End)**
**Lead Configuration**

**Figure 6.2-A**

Technician(s) Date 8/11/05

6.3 At the IP End, move leads back and forth to ensure that the leads have sufficient travel for thermal expansion. Leads should have travel shown in figure below.
Measure from the outer edge of the End Tube Ring inward toward the magnet center.

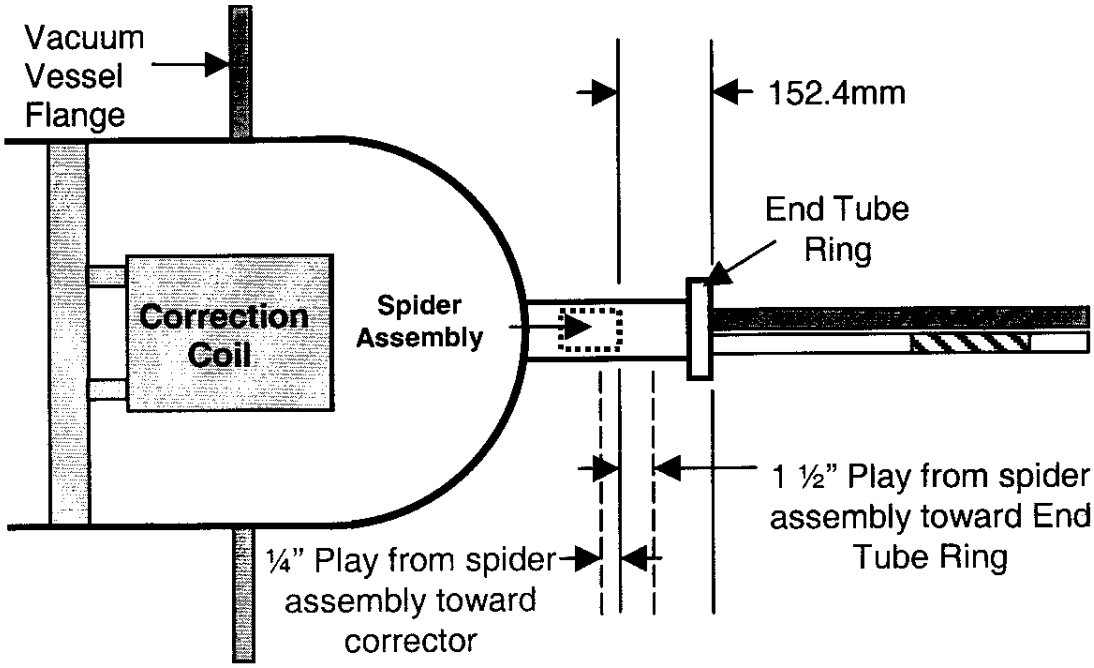


**IP End of Q3**

**Figure 6.3-A**

**Record Travel Distance:** 1 3/4"

Technician(s) Date 8/11/05

STOP

6.4 At the IP End, ensure the conductor and Spider assembly are in the "set" position (152.4mm, see fig. below.) before taking measurement for step 6.5.

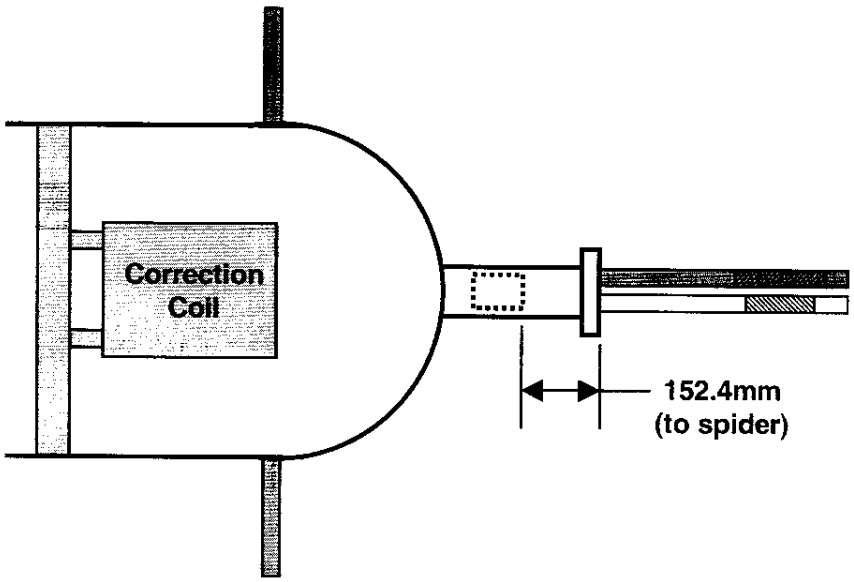


**IP End of Q3**

**Figure 6.4-A**

Rodger Bat
Crew Chief

8-11-05
Date

6.5 At the IP End, measure and record the length of the conductor (in mm) from the 'flat' of the magnet dome to the end of the conductor and record in the box provided below. (+/- 10mm)

**Note(s):**

**The 1540 mm dimension for the magnet leads includes an approximate 30 mm of extra buffer cable for installation tolerances.**

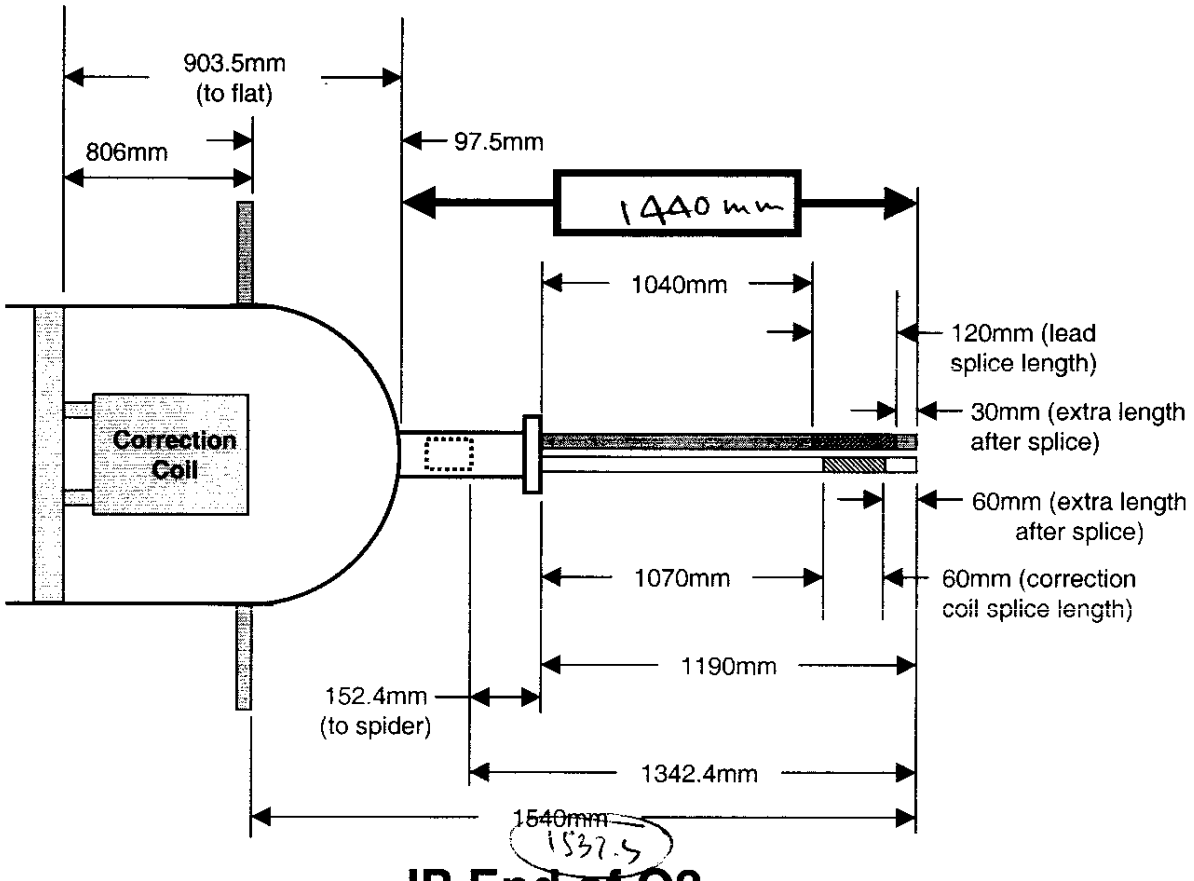


**IP End of Q3**

**Figure 6.5-A**

1440?

Technician(s) 8/11/05 Date

STOP

6.6 Verify Step 6.3 (Spider Assembly measurement) and 6.5 (Conductor measurement) are acceptable.

Responsible Authority/Physicists 8-11-05 Date

7.0 Shipping Preparation

7.1 Install Electrical Bus Shipping Restraint Assembly (MD-390748).

**Note(s):**
**Magnet wires must be inserted into the Shipping Restraint Assembly during installation.**

**Note(s):**
**Shipping Restraint Assembly is to be dry fit assembled, NOT GLUED!!!**

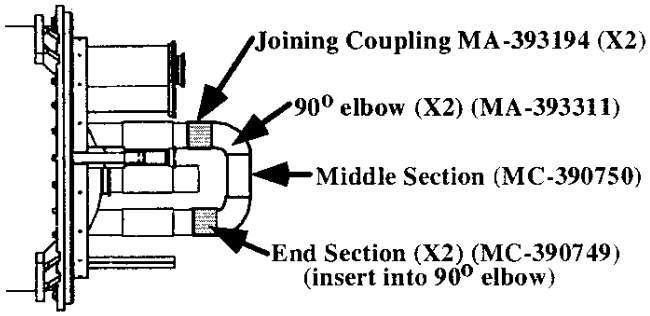


**IP Magnet End**
**Side View**

Technician(s) _____ Date 8/11/05

7.2 Install the Bellows End Sliding Flange Assembly (ME-390021) and the Fixed End Flange (ME-390020) using Bolts on both the Non-IP and IP Magnet Ends.

**Note(s):**
**Protect the Bellows during all stages of production.**

ED Technician(s) _____ Date 8-10-05

7.3 Acquire Q1/Q3 Shipping Restraint Assemblies (ME-390250)(2 ea).

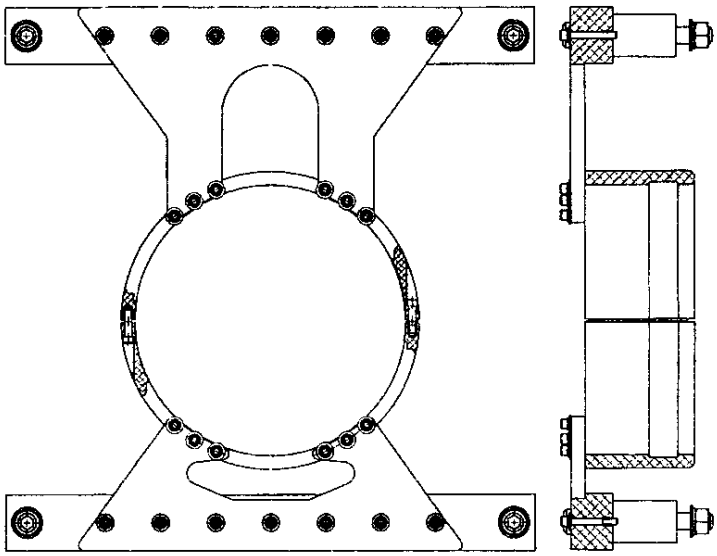

Q1/Q3 Shipping Restraint
End View
ME-390250

Q1/Q3 Shipping Restraint
Side View
ME-390250

Technician(s)

August 10, 2005
Date

7.4 Install the Shipping Restraint on the Non- IP Magnet end.

**Note(s):**

**Installation Shipping Restraint bolts should be only finger tight until complete assembly is installed.**

7.4.1 Install Cold Mass Collar (ME-390202) and secure using Socket Head Cap Screws (MA-393191), Plain Washers (MA-393060) and Lock Washers (MA-393061) per Q3 Shipping Restraint Assembly (ME-390250).

7.4.2 Install Upper Support Cross Bar (MD-390238)(1 ea) with Spacer Bushing (MB-390577) (2 ea) using Bolt (MA-393183 (2 ea), Lock Washer (MA-393186) (4 ea), Plain Washer (MA-393185) (4 ea), and Nut (MA-393184)(2 ea).

7.4.3 Install Lower Support Cross Bar (MD-390238)(1 ea) with Spacer Bushing (MB-390577) (2 ea) using Bolt (MA-393183 (2 ea), Lock Washer (MA-393186) (4 ea), Plain Washer (MA-393185) (4 ea), and Nut (MA-393184)(2 ea).

7.4.4 Install the Upper Bridge (ME-390240) to the Upper Support Bar using Bolt (MA-393187) (7 ea), Lock Washer (MA-393061) (7ea), and Flat Washer (MA-393060) (7ea).

7.4.5 Install the Lower Bridge (ME-390241) to the Lower Support Bar using Bolt (MA-393187) (7 ea), Lock Washer (MA-393061) (7ea), and Flat Washer (MA-393060) (7ea).

7.4.6 Secure Upper Bridge to Cold Mass Collar with Bolt (MA-393191) (6 ea), Lock Washer (MA-393061) (6 ea), and Plain Washer (MA-393060) (6 ea).

7.4.7 Secure Upper Bridge to Cold Mass Collar with Bolt (MA-393191) (6 ea), Lock Washer (MA-393061) (6 ea), and Plain Washer (MA-393060) (6 ea).

7.4.8 Tighten all the Shipping Restraint Bolts.

E. Stepnik [signature]
Technician(s)

August 10, 2005
Date

7.5 Install the Shipping Restraint on the IP Magnet end.

**Note(s):**

**Installation Shipping Restraint bolts should be only finger tight until complete assembly is installed.**

7.5.1 Install Cold Mass Collar (ME-390202) and secure using Socket Head Cap Screws (MA-393191), Plain Washers (MA-393060) and Lock Washers (MA-393061) per Q3 Shipping Restraint Assembly (ME-390250).

7.5.2 Install Upper Support Cross Bar (MD-390238)(1 ea) with Spacer Bushing (MB-390577) (2 ea) using Bolt (MA-393183 (2 ea), Lock Washer (MA-393186) (4 ea), Plain Washer (MA-393185) (4 ea), and Nut (MA-393184)(2 ea).

7.5.3 Install Lower Support Cross Bar (MD-390238)(1 ea) with Spacer Bushing (MB-390577) (2 ea) using Bolt (MA-393183 (2 ea), Lock Washer (MA-393186) (4 ea), Plain Washer (MA-393185) (4 ea), and Nut (MA-393184)(2 ea).

7.5.4 Install the Upper Bridge (ME-390240) to the Upper Support Bar using Bolt (MA-393187) (7 ea), Lock Washer (MA-393061) (7ea), and Flat Washer (MA-393060) (7ea).

7.5.5 Install the Lower Bridge (ME-390241) to the Lower Support Bar using Bolt (MA-393187) (7 ea), Lock Washer (MA-393061) (7ea), and Flat Washer (MA-393060) (7ea).

7.5.6 Secure Upper Bridge to Cold Mass Collar with Bolt (MA-393191) (6 ea), Lock Washer (MA-393061) (6 ea), and Plain Washer (MA-393060) (6 ea).

7.5.7 Secure Upper Bridge to Cold Mass Collar with Bolt (MA-393191) (6 ea), Lock Washer (MA-393061) (6 ea), and Plain Washer (MA-393060) (6 ea).

7.5.8 Tighten all the Shipping Restraint Bolts.

D Murphy
Technician(s)

8-16-05
Date

7.6 Install Electrical Bus Shipping Restraint Short End Cover (MD-390752) into Lower Cold Mass Pipe to protect the Buss Wire.

Technician(s) _____ Date August 10, 2005

7.7 Install Protective End onto PVC Bus Protector Tube.

Technician(s) _____ Date August 10, 2005

7.8 Secure bellows with Bellow Restraint/Protective Cover (MA-390153) using Screws (MA-390180).

**Note(s):**

**Protect the Bellows during all stages of production.**

Technician(s) _____ Date August 10, 2005

7.9 Install the Vinyl Flange Covers (MA-390491), (MA-390492), (MA-390493), (MA-390494), & the Alignment Fiducial Covers (MA-390495).

wayne Technician(s) _____ Date 8/11/05

7.10 Are Accelerometers (Shock Recorders) available for installation?

☒ **Yes - Install Accelerometers as per Responsible Authority and Figure 7.10-A below.**

☐ **No - Accelerometers are <u>NOT</u> available for installation.**

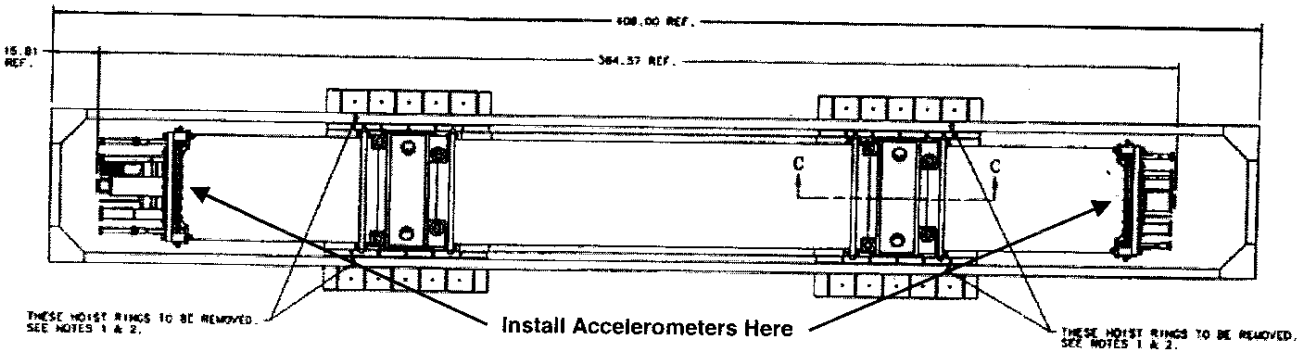


**Figure 7.10-A**

Technician(s) _____ Date 9/11-05

7.11 Install Magnet Identification Labels as per Q3 Identification Labeling Layout (ME-390762).

**Example:**

**If Serial No. at bottom of Traveler is: LQXC02**

**Stencil Serial No. should be: HCLQXC_001-FL000002**

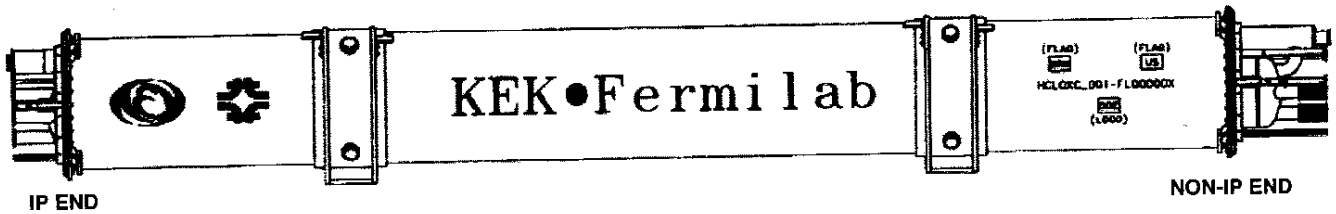


OPPOSITE SIDE VIEW

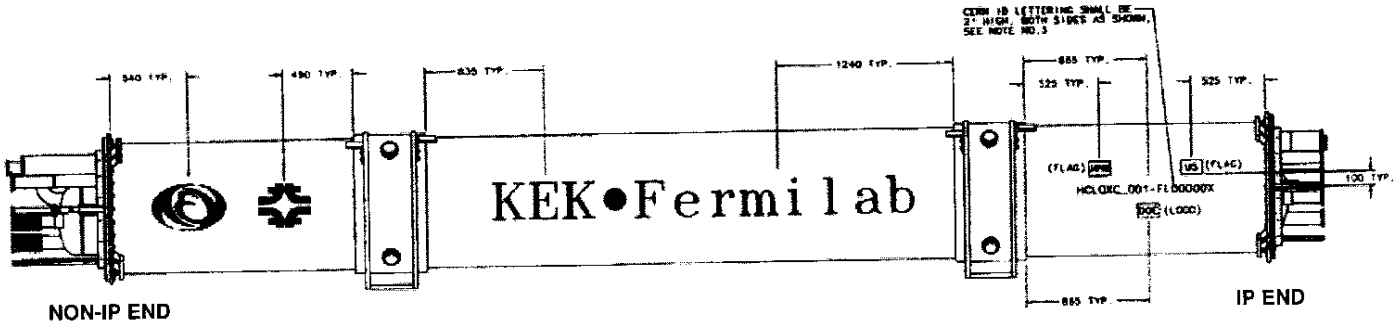


**Q3 IDENTIFICATION LABELING LAYOUT (ME-390762)**

Technician(s) _____ Date 8/12/05

7.12 Verify Magnet has been properly labeled/stenciled, and serial number matches the bottom of this traveler and as per (ME-390762).

**Example:**

**If Serial No. at bottom of Traveler is: LQXC02**

**Stencil Serial No. should be: HCLQXC_001-FL000002**

Lead Person _____ Date 8/12/05

8.0 Final Inspection/Installation

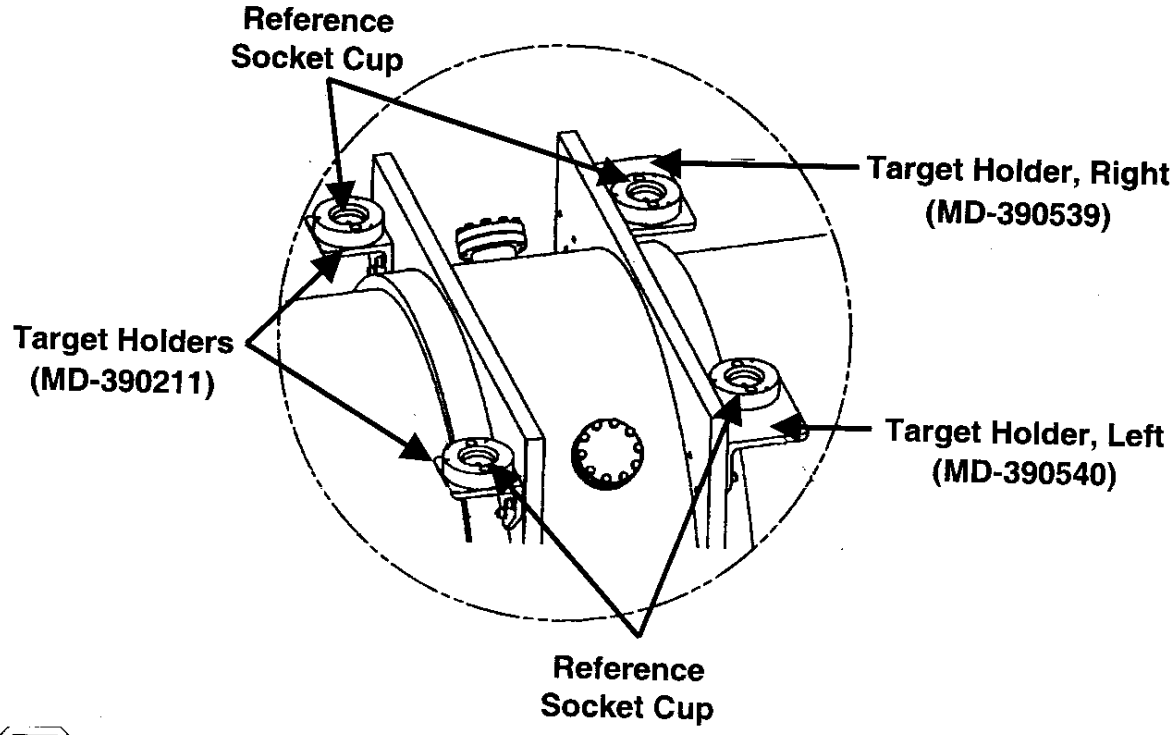


STOP

8.1 Verify Target Holder (MD-390211) (4 ea), Target Holder, Right (MD-390539) (2 ea), and Target Holder, Left (MD-390540) (2 ea) with Reference Socket Cup (MA-390426) (8 ea) and Protective Covers (MA-390495) are installed.

Lead Person _____ Date 8/12/05

STOP

8.2 Verify that the Target Holder had been pinned using Spring Pins (MA-393048) as per Q3 Cryostat General Assembly (ME-390132).

Lead Person _____ Date 8/12/05

9.0 Shipping the Magnet

STOP

☐ **Check box if shipping frame is installed in Shipping Container. Proceed to STEP 10.0.**

☒ **Check box if Shipping Frame is NOT installed already installed in a Shipping Container. Proceed to STEP 9.1**

Lead Person _____ Date 8/12/05

9.1 Acquire the Shipping Frame Assembly (ME-390729).

Technician(s) _____ Date 8/12/05

9.2 Verify that Frame Separator Bars are installed on the Shipping Frame Assembly. Refer to Q1/Q3 and Q2 Fixture Return Shipping Assembly (ME-390798).

NOTE THIS MAGNET IS BEING SHIPPED BY AIR!

☒ **Not Installed, proceed to Step 9.3. Verify Separator Bars are Ordered via Parts Kit. Contact Process Engineering Traveler Coordinator.**

☐ **Installed on Shipping Frame Assembly, Proceed to Step 9.4.**

Technician(s) _____ Date 8/12/05

9.3 Acquire and install the following parts.

| | | |
|---|---|---|
| ~~Separator Bars~~ | ~~ME-390797~~ | ~~3 ea~~ |
| Screw ½" – 13 X 3.5" l | MA-393384 | 6 ea |
| ~~Washer, Flat ½"~~ | ~~MA-393325~~ | ~~6 ea~~ |
| Washer, Bevel ½" | MA-393385 | 6 ea |
| ~~Hex Nut ½" - 13~~ | ~~MA-393298~~ | ~~6 ea~~ |

**Note(s):**

**Ensure Q2 to Q1/Q3 Hardware is also acquired/installed for usage by CERN:**

| | | | |
|---|---|---|---|
| Screw ¾" -10 x 3.5" | MA-393386 | 4 ea | Installed on two end Separator Bars |
| ~~Washer Flat ¾"~~ | ~~MA-393326~~ | ~~4 ea~~ | ~~Installed on two end Separator Bars~~ |
| Hex Nut ¾"- 10 | MA-393387 | 4 ea | Installed on two end Separator Bars |

| | | | |
|---|---|---|---|
| ~~Screw 1"-8 x 4" long~~ | ~~MA-393388~~ | ~~2 ea~~ | ~~Installed on center Separator Bar~~ |
| Washer Flat 1" | MA-393389 | 2 ea | Installed on center Separator Bar |
| ~~Hex Nut 1"-8~~ | ~~MA-393390~~ | ~~2 ea~~ | ~~Installed on center Separator Bar~~ |

Technician(s) N/A _____ Date _____

9.4 Acquire the following shipping hardware:

| | | |
|---|---|---|
| Eyebolt | McMaster-Carr 3016T85 | 4 ea |
| Flat Washer | MA-393328 | 8 ea |
| Chain w/2 Hooks | MA-390702 | 4 ea |
| Flat Washer | MA-393323 | 6 ea |

STEVES _____ Technician(s) 8-12-05 Date

★9.5 Remove the Hoist Rings (4 Total) from the Outer Frame as per Q3 Magnet Shipping Assembly (ME-390728).

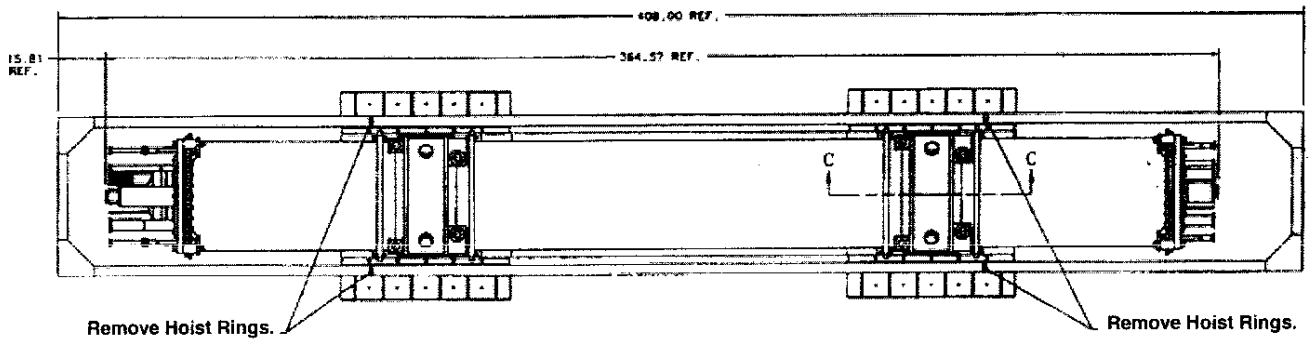


LEAVE HOIST RINGS ON!

N/A Technician(s) _____ Date

★9.6 Transport the Q3 Shipping Fixture (ME-390729) and install into the Shipping Container using approved methods.

N/A Technician(s) _____ Date

NOT USING ★ magnet being shipped by air. J. Spotts

10.0 Magnet to Shipping Frame/Platform Installation

10.1 Transport the magnet to the Magnet Shipping Fixture and install using Bolt (MA-393321)(6 ea), Flat Washer (MA-393323)(6 ea), and Lock Washer (MA-393322)(6 ea).

**Note(s):**

**Apply a small amount of Anti-Seize to all of the bolt threads prior to installing the bolts.**

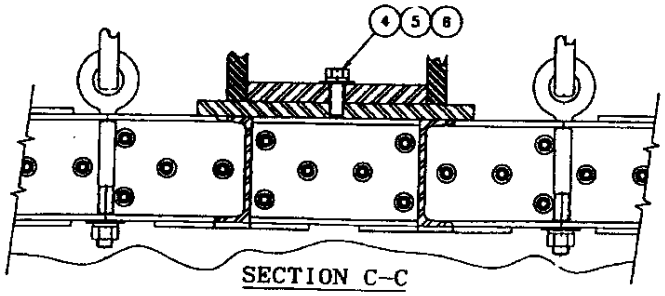


**Q3 Magnet Shipping Assembly**
**(ME-390728)**

Technician(s) _____ Date 8/11/05

10.2 Install Eyebolts, McMaster-Carr #3016T85 (4 ea), Eyebolts, McMaster Carr #3016T87 (4 ea), Flat Washer (MA-393328) (8 ea), and Lock Washer (MA-393329) (8 ea) into Shipping Fixture.

**Note(s):**

**Install all Eyebolts #3016T85 on one side of the shipping fixture. Eyebolts #3016T87 go on the opposite side.**

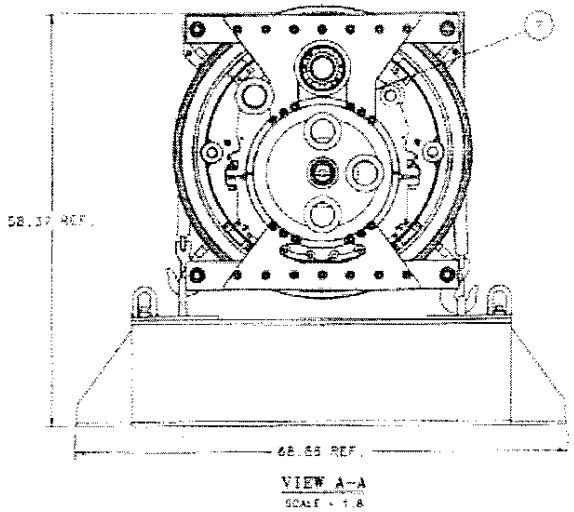


**Q3 Shipping Assembly - End View**

STEVE S Technician(s) _____ Date 8-11-05

10.3 Install the Lift All Pukka Wear Pad Protectors (MA-393345) onto magnet prior to installing Chain Sling.

Steve S. [signature] 8-11-05
Technician(s) Date

10.4 Install chain sling w/2 hooks (MA-390702) (4 ea) into eyebolts.

Steve S. [signature] 8-11-05
Technician(s) Date

10.5 Tighten eyebolts until chains are snug.

Steve S [signature] 8-11-05
Technician(s) Date

10.6 Install an additional nut (double nutting) on each eyebolt and tighten.

Steve S. [signature] 8-11-05
Technician(s) Date

10.7 Wrapping of the magnet.

☒ Performed by Shipping Company, proceed to Step 10.9

☐ Performed by Fermilab, proceed to Step 10.8

[signature] 10/11/05
Lead Person Date

10.8 Wrap the magnet in protective material (VCI Plastic) and seal the seam using approved methods to form a protective bag.

VENDOR Dinth

N/A [initials]
Technician(s) Date

10.9 Install cross braces on the top of the shipping container.

N/A
Technician(s) Date

10.10 Install protective cover on the top of the shipping container and secure.

N/A
Technician(s) Date

These steps are N/A because this magnet is being shipped by air. [signature]

STOP

10.11 Verify the magnet, shipping frame are properly secured, and protected.

[signature] 8-17-05

Responsible Authority/designee Date

STOP

10.12 Close and secure doors on the shipping container.

N/A

Crew Chief Date

THIS MAGNET WAS SHIPPED BY AIR. NO SHIPPING CONTAINER USED.

[signature] 8/17/05

11.0 Documentation Update

11.1 Perform the following:

- ☑ **Update DSR Keywords.**
- ☑ **Location.**
- ☑ **Location Verified Date.**
- ☑ **Status.**
- ☑ **Make entry regarding work performed.**

TD/E&F Production Supervisor/designee

Date 8/17/05

12.0 Production Complete

12.1 Process Engineering; verify that the Traveler is accurate and complete. This shall include a review of all steps to ensure that all operations have been completed and signed off. Ensure that all Discrepancy Reports, Nonconformance Reports, Repair/Rework Forms, Deviation Index and dispositions have been reviewed by the Responsible Authority for conformance before being approved.

Comments:

Bob Johnson

Process Engineering/Designee

Date 5/24/06

# TD - Engineering Fabr' tion Component Kit List

ORIGINAL

RECEIVED
JUL 15 2005
MATERIAL CONTROL/IB4

**Process Engineering**

Component Serial No.: LQXC03
Kit submitted by: John Szostak | Ext. 2003
Fermi ID No.: 02943C
Date submitted: 14-Jul-05
Need date: 22-Jul-05
Deliver to: ICB
Use with Traveler No.: 333732
Job No.: 248
M&S task number: 300 | 1.1.1.3.4
Drawing Title: Q3 MAGNET SHIPPING ASSEMBLY
Drawing No.: ME-390710 | Rev. A

**Material Control**

**Parts available**

Verified by: M. Schmidt MS
Fermi ID No.: 04223N
Date submitted to stockroom: 15-Jul-05

**Parts issued**

Issued by: Ann Hedwin
Fermi ID No.: 14290
Date issued: 7/20/05
Parts received by E&F: J. Szostak
Fermi ID No.: 02943C
Date received by E&F: 7/20/05

| | Description | Dwg Size | Number | Rev | Unit | Quantity Required | Location | Quantity Issued | E&F Verified | Routing Form Number | Spares Number / Comment |
|---|---|---|---|---|---|---|---|---|---|---|---|
| 1 | KAPTON TAPE | MA | 106723 | A | EA | A/R | | | | | |
| 2 | ¾" BLACK SHRINK TUBING | MA | 318797 | A | EA | A/R | | | | | |
| 3 | Q3 CRYOSTAT GENERAL ASSEMBLY | ME | 390132 | G | EA | ICB HAS | | | | | |
| 4 | BELLOWS PROTECTORS | MA | 390153 | * | EA | 6 | R7,2,2 | 6 | | 79773 | 108 pcs. |
| 5 | Q1/Q3 SHIPPING RESTRAINT ASSEMBLY | ME | 390250 | A | EA | 2 | | | | | In Container |
| 6 | CHAIN SLING W/ 2 HOOKS | MA | 390702 | * | EA | 4 | | | | | In Container |
| 7 | Q1/Q3 SHIPPING FIXTURE | ME | 390729 | * | EA | ICB HAS | | | | | |
| 8 | ELECTRICAL BUS SHIPPING RESTRAINT ASSEMBLY | MD | 390748 | * | EA | 1 | R7,3,4 | 1 | | 81801 | 11 pcs. |
| 9 | ELECTRICAL BUS SHORT END COVER | MD | 390752 | * | EA | 1 | R7,3,4 | 1 | | 81802 | 13 pcs. |
| 10 | SCREWS | MA | 393180 | * | EA | 18 | IB4 Bin | 18 | | 79631 | 563 pcs. |
| 11 | 3/4-10 HEX HD. BOLT x 2.50 LG. - GR. 8 STL. | MA | 393321 | * | EA | 6 | | | | | In Container |
| 12 | 3/4 LOCK WASHER - STL. | MA | 393322 | * | EA | 6 | | | | | In Container |

ORIGINAL

ORIGINAL

## TD - Engineering Fabr' tion Component Kit List

| | Description | Dwg Size | Number | Rev | Unit | Quantity Required | Location | Quantity Issued | E&F Verified | Routing Form Number | Spares Number / Comment |
|---|---|---|---|---|---|---|---|---|---|---|---|
| 13 | 3/4 FLAT WASHER - STL. | MA | 393323 | * | EA | 6 | | | | | In Container |
| 14 | 1"-8 HEX NUT - STL. | MA | 393327 | * | EA | 16 | | | | | In Container |
| 15 | 1" FLAT WASHER - STL. | MA | 393328 | * | EA | 8 | | | | | In Container |
| 16 | 1" LOCK WASHER - STL. | MA | 393329 | * | EA | 8 | | | | | In Container |
| 17 | LIFT ALL PUKKA WEAR PAD PROTECTORS | MA | 393345 | * | EA | 4 | | | | | In Container |
| 18 | EYEBOLT - 1"-8 x 12" LG. | | 390731-11 | * | EA | 4 | | | | | In Container |
| 19 | EYEBOLT - 1"-8 x 9" LG. | | 390731-7 | * | EA | 4 | | | | | In Container |
| 20 | ANTI-SEIZE | | | * | EA | A/R | | | | | |
| 21 | ACCELEROMETER | | | * | EA | ICB HAS | | | | | |