Document ID: 7830

LHC Q3 LMQXC Module Assembly Traveler

333729 / Rev. B

Job No:	**248**
E + F Project/Task No.:	**300/1.1.1.6.2**
M + S Project/Task No.:	**300/1.1.1.6.2**

Place This Side Down For Scanning!!!

LMQXC04-0

Document ID:

7830

Job No.:

248

Project/Task No.

300/1.1.1.6.2

Series:

LQXC

Serial No:

LMQXC04

Rework ID:

0

Specification No.:

333729

Revision:

B

LMQXC04-0

Fermi National Accelerator Laboratory
Batavia, IL 60510

LARGE HADRON COLLIDER
Q3 - LMQXC
COLD MASS MODULE ASSEMBLY TRAVELER

Reference Drawing(s):
Q3 Cold Mass Welded Assembly (ME-390529)
Q3 Module Assembly (ME-369900)

Project/Task Number: *300/1.1.1.6.2*

Released By: *John Szostak* **Magnet/Device Series:** *LQXC*

Date Issued: *4/22/2005 1:28:13 PM* **Scanned Pages:** 145

Prepared by: J. Szostak

Title	Signature	Date
TD / E&F Process Engineering	*Jamie Blowers* Bob Jensen / Designee	*3/8/05*
TD / LHC Production Supervisor	*Jim Rife* Jim Rife / Designee	*3/8/05*
TD / LHC Production Engineer	*Rodger Bossert* Rodger Bossert / Designee	*3/8/05*
TD / LHC Project Engineer Cryostat	*Tom Nicol* Tom Nicol / Designee	*3/8/05*
TD / LHC Project Physicist	*Mike Lamm* Michael Lamm / Designee	*3/8/05*
TD / LHC Program Manager	*Jim Kerby* Jim Kerby / Designee	*3/8/05*

Revision Page (1 of 2)

Revision	Step No.	Revision Description	TRR No.	Date
None	N/A	Initial Release	N/A	8/20/04
A	5.0	Modified Step. Modified to reflect production floor process.	1682	12/15/04
	9.2	Modified Step. Changed to Crew Chief signoff.		
	9.3	Modified Step. Changed to Weldor signoff.		
	12.3	Modified Step. Added "...and Figure 12.0."		
	15.2	Modified Step. Changed to "Using the Valhalla 4300B, connect 10mA applied voltage thru the corrector Power Leads. Measure Resistance and record in the table below." Modified Table. Added Picture of Corrector Bus Leads.		
	17.1	Modified Step. Changed (MC-369552) to (MC-369522).		
	17.4	Modified Step. Changed IP to Non-IP.		
	17.6	Modified Step. Changed IP to Non-IP.		
	17.7.2	Modified Step. Changed Non-IP to IP.		
	17.8	Modified Step. Changed Non-IP to IP.		
	17.10	Modified Step. Changed Non-IP to IP.		
	18.9	Added Step. "Tack weld the Extension Tube (MD-390667) to the Cold Mass per (ME-390529)."		
	18.11	Added Step. "Weld the Extension Tube (MD-390667) to the Cold Mass per (ME-390529)."		
	19.9	Modified Step. Changed to "Measure the distance between the Suspension Rings at the bottom of the Threaded Rods and record measurements below. Copy this page and place copy in designated book for later reference. (TR-333730, Q3 Cryostat Final Assembly, Step 5.1)."		
	19.17	Modified Step. Changed Non-IP to IP.		
	19.18	Modified Step. Removed Center – North and Center – South.		
	19.21	Removed Step. "Weld the Shielding Blocks (MB-390534) to the Cold Mass per Q3 Suspension System Installation (ME-390525)." No shielding Blocks		
	19.22	Modified Step. Added 112.5.		
	19.23	Modified Step. Added 337.5.		
	21.1	Modified Step. Modified Resistance Table.		
	21.2	Modified Step. Changed to "Using the Valhalla 4300B, connect 10mA applied voltage thru the corrector Power Leads. Measure Resistance and record in the table below." Modified Table. Added Picture of Corrector Bus Leads.		
	22.2	Added Step. Added "Assemble/Install Hypertronics Connectors, **without Cover** at **IP End** as per Q3 Module Assembly (ME-369900). Pin Numbers for connectors are shown in Table 22.2 below."		
	22.3	Added Step. "Inspect Hypertronics Connector. Ensure that it is free of flux and that Kapton has been installed properly."		
	22.4	Added Step. "After LHC Project Physicist / designee has signed the above step, complete the installation of the Hypertronics."		
	23.2	Modified Step. Changed to "Using the Valhalla 4300B, connect 10mA applied voltage thru the corrector Power Leads. Measure Resistance and record in the table below." Modified Table. Added Picture of Corrector Bus Leads.		
	23.4	Added Step. "Ensure electrical measurements are acceptable and confirm Hypertronics Connector has been installed properly."		

Revision Page (2 of 2)

Revision	Step No.	Revision Description	TRR No.	Date
B	1.6	Added Step. "Protect the bellows during all stages of production." **DR No. HGQ-0500.**	1695	3/4/05
	7.6	Removed Step. Moved to after electrical. New step 7.8.		
	7.0 to 17.0	Modified order of steps per production request. (Subsequent changes to steps will reflect new Step Numbers)		
	7.14	New step. "Splice Cold mass voltage taps to wire bundle. Verify splices electrically." Per LMQXC02.		
	7.15	New step. "Attach wires using putty and install the Voltage Tap Splice Cover Block (MC-430146)." Per LMQXC02.		
	9.5	Added Step. "Solder Corrector Wires per Q3 Module Assembly (ME-369900) and as shown in Figure 9.4-A."		
	9.6	Added Step. "Install voltage taps on MCBXA corrector leads. One tap is to be soldered to the "A" Lead of each corrector element. Wire labels are shown below."		
	11.12	Modified Step. Added check boxes and specifications for measurements taken with Mini-level.		
	12.1	Modified Step. Added picture, (ME-369900 - Rev. A, Sheet 3 of 5), per production request.		
	12.11	Added Step. "Solder MQSX Corrector Wires."		
	12.13	New Step. "At the IP End, attach Spider Assembly (MD-430072) as per Q3 Module Assembly (ME-369900)."		
	15.3	New Step. "At the Non-IP End, attach Spider Assembly (MB-430096) as per Q3 Module Assembly (ME-369900)." **Per DR No. HGQ-0520.**		
	16.2	Modified Step. Added "Record Initial resistance of Corrector Element and record below." Added column to record initial resistance of Corrector Element.		
	16.3	Added Step. "Attach Backing Splines as per Q3 Module Assembly (ME-369900)."		
	16.4	Added Step. "At the IP End (Lead End) wrap the Springboard Assemblies in Kapton and then wrap with Kevlar String (MA-369912) every ½ - ¾" over Kapton as per Q3 Module Assembly (ME-369900)."		
	16.5	Added Step. "At the Non-IP End (Non-Lead End) wrap the Springboard Assemblies in Kapton and then wrap with Kevlar String (MA-369912) every ½ - ¾" over Kapton as per Q3 Module Assembly (ME-369900)."		
	17.3	Modified Step. Moved Step per production request. "Position the Beam Tube (MC-369522) longitudinally per Q3 Cold Mass Welded Assembly (ME-390529)." New Step 20.1		
	19.2	Modified Step. Changed to "Insert the Fixed Support Assembly (ME-390041) into the Vacuum Vessel and position at the IP End."		
	19.5	Modified Step. Changed to "Insert the Sliding Support Assembly (ME-390042) in to the Vacuum Vessel and position at the Non-IP End."		
	20.8	Modified Step. Changed to "Perform a stretched wire measurement of the system to align the Beam Tube Flange within ± .5 mm."		
	21.2	New Step. "Check Q1 & Q2 Instrumentation Bus Wires for Continuity." Added Table.		
	21.3	Modified Step. Added "Record Initial resistance of Corrector Element and record below." Added column to record initial resistance of Corrector Element.		
	22.1	Modified Step. Changed Picture of "Hypertronics Connector Pin Locations (Q3 non-IP end) VIEW: Male (pin) solder cup side" to show correct hookup configuration to DFBX.		
	23.0	Modified Step. Removed electrical checks that are previously performed by MTF, per production request.		

Ensure appropriate memos and specific instructions are placed with the traveler before issuing the sub traveler binder to production.

1.0 General Notes

1.1 All steps that require a sign-off shall include the Technician/Technician(s)s first initial and full last name.

1.2 No erasures or white out will be permitted to any documentation. All incorrectly entered data shall be corrected by placing a single line through the error, initial and date the error before adding the correct data.

1.3 All Discrepancy Reports issued shall be recorded in the left margin next to the applicable step.

1.4 Personnel shall perform all tasks in accordance with current applicable ES&H guidelines and those specified within the step.

1.5 Cover the product/assembly with Green Herculite (Fermi stock 1740-0100) when not being serviced or assembled.

1.6 Protect the Bellows during all stages of production.

2.0 Parts Kit List

2.1 Attach the completed Parts Kit for this production operation to this traveler. Ensure that the serial number on the Parts Kit matches the serial number of this traveler. Verify that the Parts Kit received is complete.

J. Gostofa
Process Engineering/Designee

4/22/05
Date

3.0 Q3 Module Alignment

3.1 Record the serial number for each Magnetic Component Assembly.

Q3 Serial Number: MQXA - 14

MCBXA Corrector Coil Serial Number: MCBXA - 27

MQSX Corrector Coil Serial Number: MQSX-05

MCSOX Corrector Coil Serial Number: MCSOX-05

STOP

Responsible Authority/Physicist — Date: 5/4/05

3.2 Attach the Certificate of Conformity, for vendor supplied components, and the Quality Record, for vendor supplied components, to this traveler.
Verify that the Certificate of Conformity and /or the Quality Record (as required) has been filled out and performed by Fermilab personnel.

STOP

Crew Chief — Date: 5-4-05

4.0 Q3 Magnet Placement (Module Assembly Tooling)

4.1 Configure tooling for Q3 Cold Mass Assembly (ME-390528) per Final Cold Mass Assembly Stat – Support and Clamping Fixture (ME-369768).

Technician(s) _____ Date 5/4/05

4.2 Configure tooling for Corrector Mounting per Cold Mass / Cryostat Station Corrector Support Fixture (ME-369780), 13.780 Diameter Corrector Magnet.

Technician(s) _____ Date 5/4/05

4.3 Configure tooling for End Dome Mounting per Cold Mass Cryostat Station Final Assembly (ME-369765, View E-E).

Technician(s) _____ Date 5/4/05

4.4 Move the Q3 Cold Mass to the Cold Mass Module Assembly Tooling, placing it nearest the West End of ICB, with the Lead End of the Magnet facing west as per Q3 Cold Mass Welded Assembly (ME-390529).

Technician(s) _____ Date 5/4/05

5.0 Bus Assembly Installation

5.1 Measure the length of the Cold Mass and record below.

Cold Mass Length: 22'

Technician(s) L. Ruiz / Ines Romero — Date 5/04/05

5.2 Add four feet (48 inches) to the Cold Mass Length and record below. This will be the top piece.

Cold Mass Length from step 5.1: 22'

Add: + 48 in.

Length of top piece: 26'

Technician(s) L. Ruiz / Ines Romero — Date 5/04/05

STOP

Crew Chief — Date 5-4-05

5.3 Cut a piece of Nomex (MB-430064) equal to the total length recorded in step 5.2. This will be referred to as the top piece.

Technician(s) L. Ruiz / Ines Romero — Date 26 ft. 5/4/05

5.4 Record the total length of the top piece, recorded in step 5.2, below. Multiply the total by 2 and record the number below. This will be the length of the bottom piece.

Length of top piece: 26'

Multiply by 2: x 2

Length of bottom piece: 52'

Technician(s) L. Ruiz / Ines Romero — Date 5/4/05

STOP

Crew Chief — Date 5-4-05

5.5 Cut a piece of Nomex (MB-430064) equal to the total length recorded in step 5.4. This will be referred to as the bottom piece.

Technician(s) _____ Date 5/4/05

5.6 Pull the two pieces of Nomex (MB-430064) through the Bus Slot. Leave two feet of Nomex extending past the end of the Cold Mass at the Lead End and Non-Lead End. Fold top piece over top of Cold Mass and fold bottom piece under bottom of Cold Mass. (As shown n figure 5.6 below)

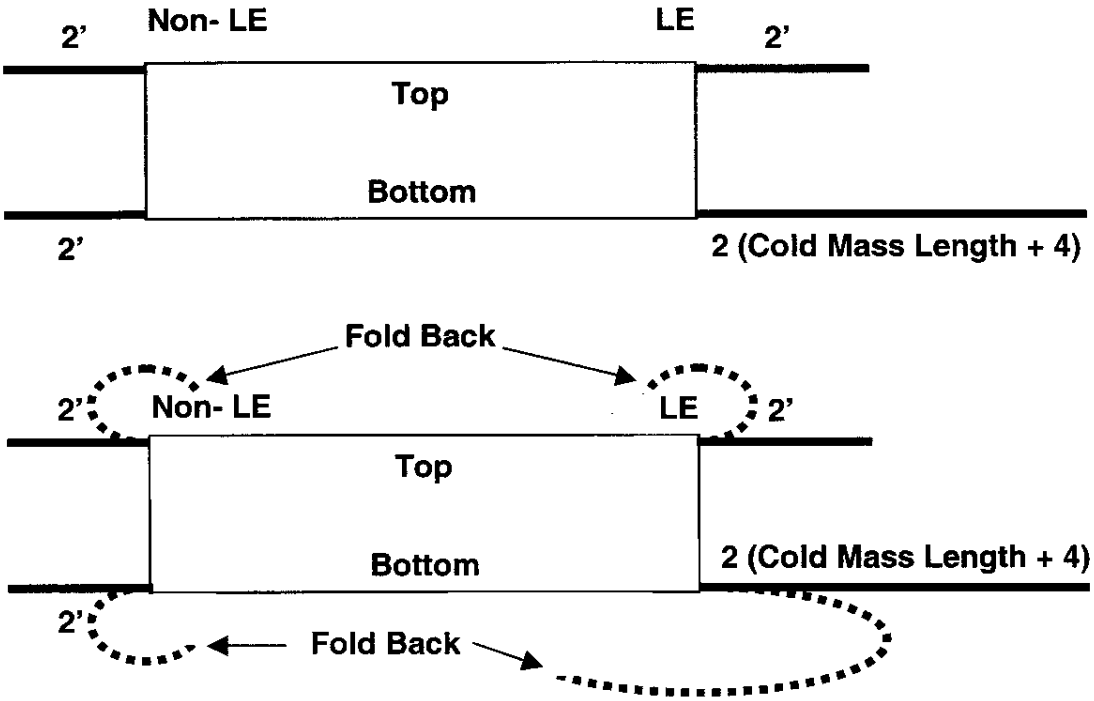

Figure 5.6

Technician(s) _____ Date 5.5.05

5.7 Starting at the Lead End, slide the Lead and Corrector Coil Bus Assembly (MB-430065) into Magnet Bus Slot between the two pieces of Nomex (MB-430064). The bottom piece of Nomex will move with the bus. Pull the bottom piece as it is being fed into the Cold Mass.

Technician(s) _____ Date 5.5.05

5.8 Cut Nomex (MB-430064) equal to the Length of the Cold Mass. (See Step 5.1 for reference)

Technician(s) _____ Date 5-5-05

6.0 Q3 Cold Mass Alignment

6.1 Rotate the Q3 Cold Mass, with the Power Leads facing up, into the proper orientation as shown in Figure 6.1-A.

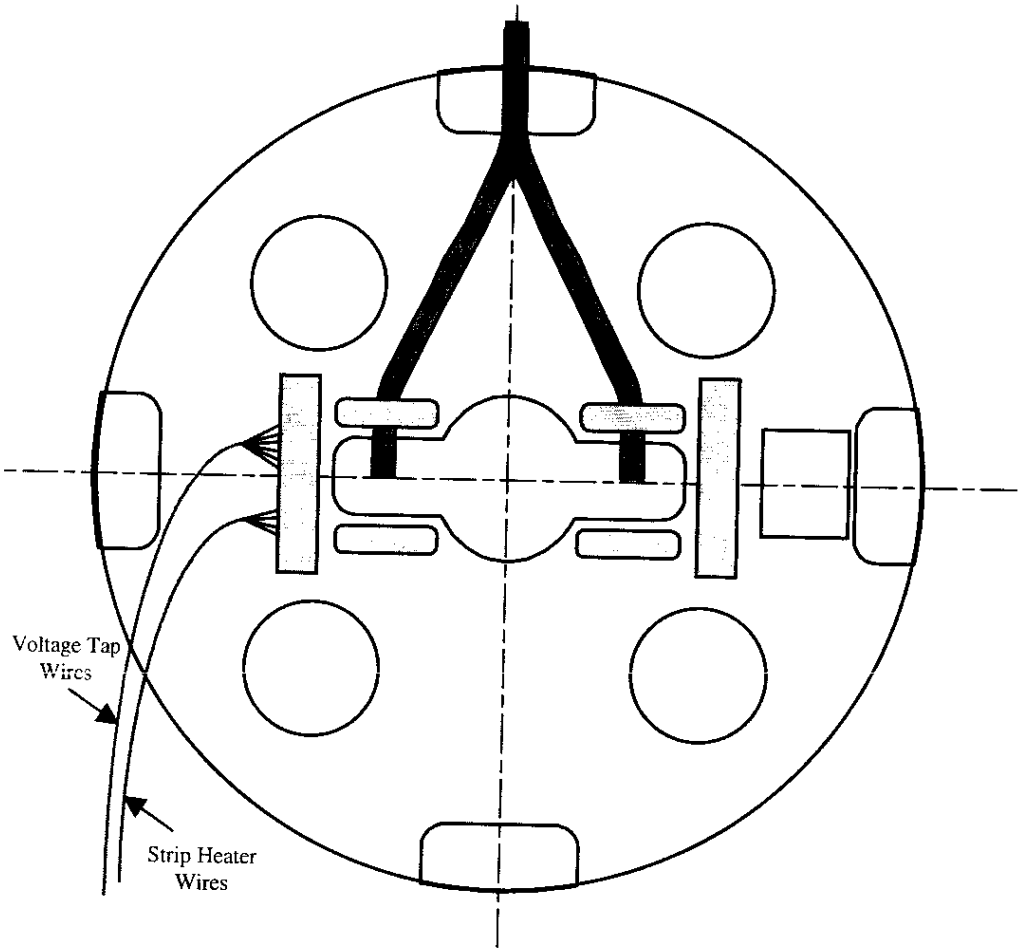

Looking at Lead End of Q3

Figure 6.1-A

Technician(s) _____ Date 5.5.05

6.2 Perform a stretched wire measurement of the system to align the Cold Mass within ± .2 mR.

Responsible Authority/Physicist _____ Date 5/15/05

7.0 Instrumentation Installation

7.1 Prepare Q3 Instrumentation Wire Feed thru (MB-430074). Build per Q3 Module Assembly Instrumentation Wire Feed thru (ME- 430074). Wire Labels and descriptions are shown in Figure 7.1 and per (MB-430074).

Note(s):

USE ONLY CERN LABELS ON WIRES.

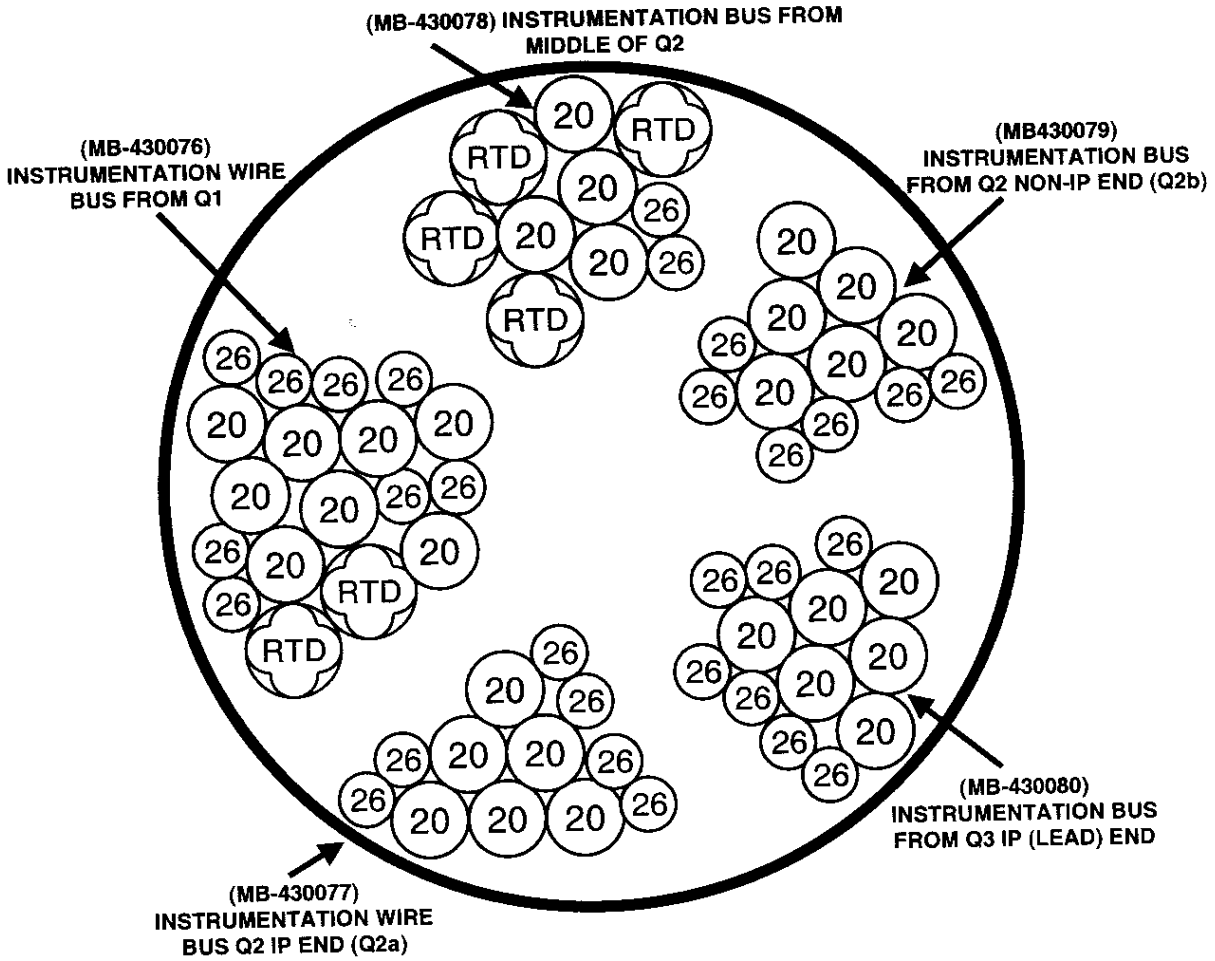

Figure 7.1
INSTRUMENTATION TUBE

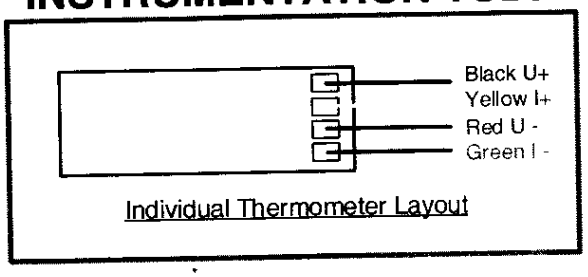

Technician(s) 5-5-05 Date

7.2 Slide Instrumentation Bus Assembly (MB-430074) into the proper Q3 Port as per Q3 Module Assembly (ME-369900). Verify that there is sufficient slack in cable to allow for two inches of differential thermal contraction.

Technician(s) 5-5-05 Date

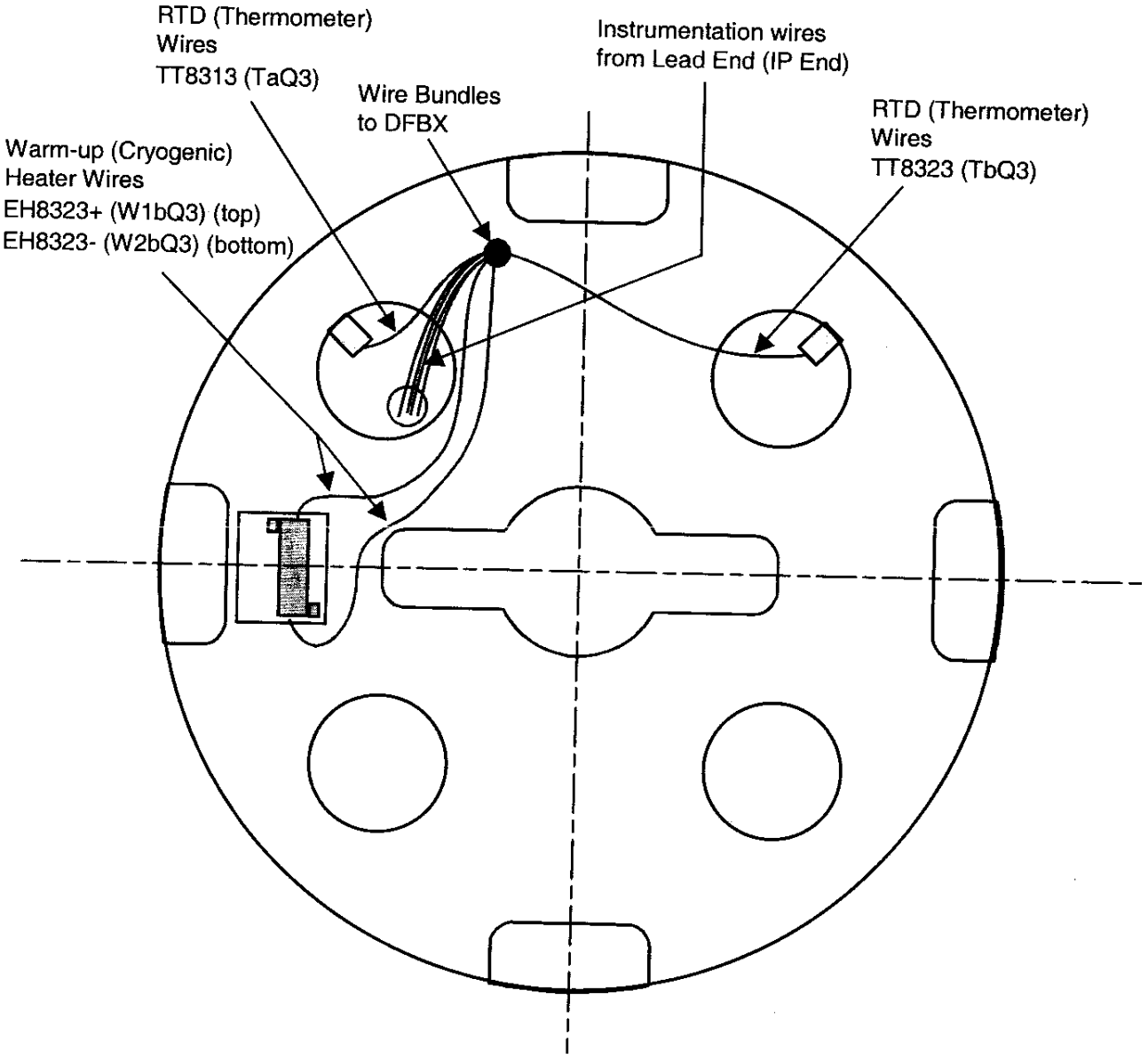

Looking at Non-Lead End (Non-IP End) of Q3

Figure 7.2-A

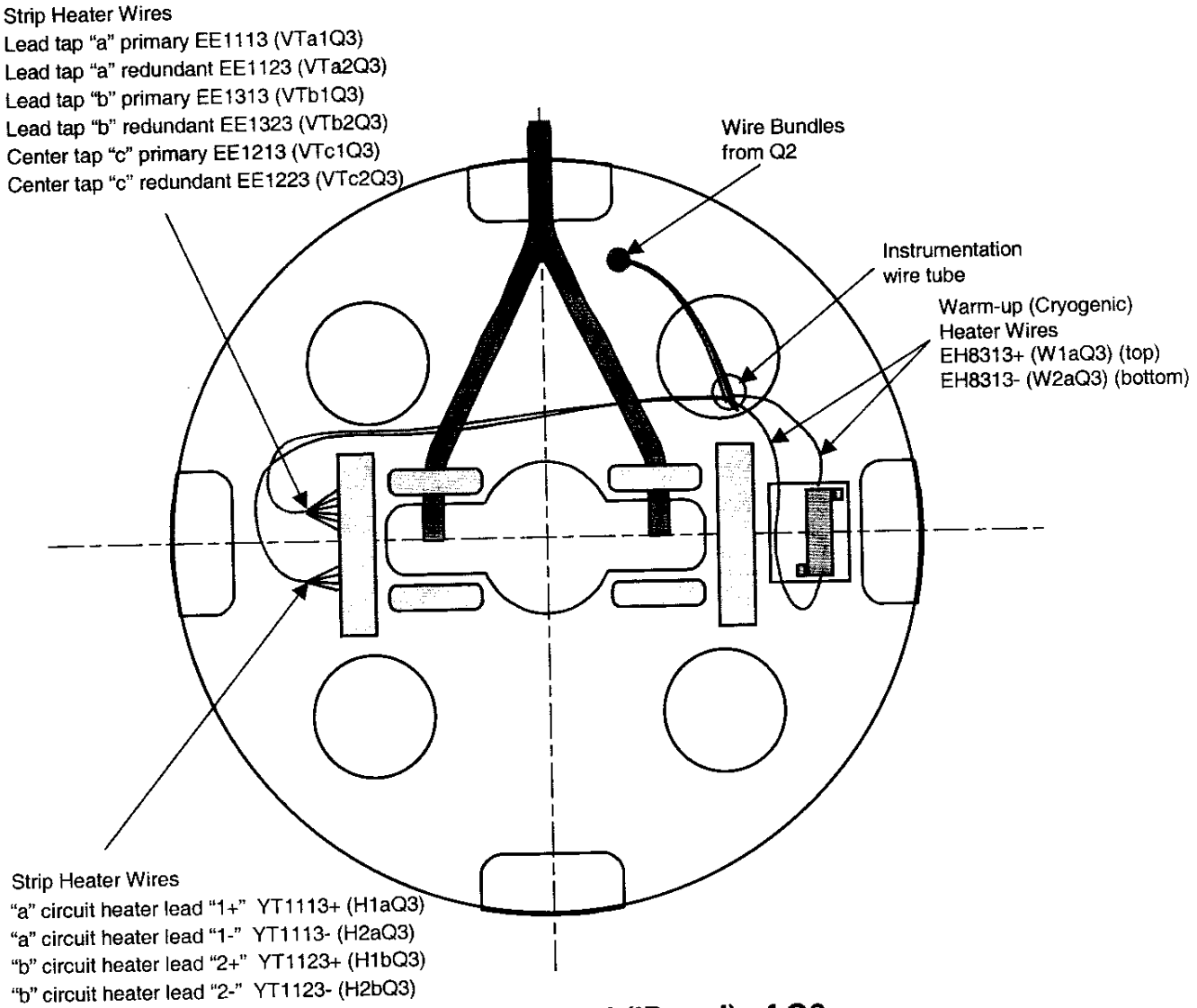

Looking at Lead End (IP end) of Q3

Figure 7.2-B

7.3 Weld Warm-up Heater Base Plates (MA-369997) and RTD Mount Blocks to End Plates as per Q3 Module Assembly (ME-369900).

Weldor(s) _____ Date 5/5/05

7.4 Install Warm-up Heaters (ME-369834) to each end of Q3 as per Q3 Module Assembly (ME-369900).

7.4.1 Install Warm-up Heaters (MA-369834) onto the Warm-up Heater Base Plate (MA-369997).

7.4.2 Solder wires (MA-369832) to the Warm-up Heaters as per (ME-369900).

Technician(s) _____ Date 5/9/05

7.5 Install RTD's as per Q3 Module Assembly (ME-369900). Record Serial Numbers of each RTD in the table below. Attach Data Sheet for each RTD to traveler.

7.5.1 Attach RTD's (MA-369835) (Qty. 4) to Mounting Blocks as per Q3 Module Assembly (ME-369900).

7.5.2 Solder wires (MA-369836) to RTD's as per Q3 Module Assembly (ME-369900). Individual RTD wiring is shown in Figure 7.5.2-A below.

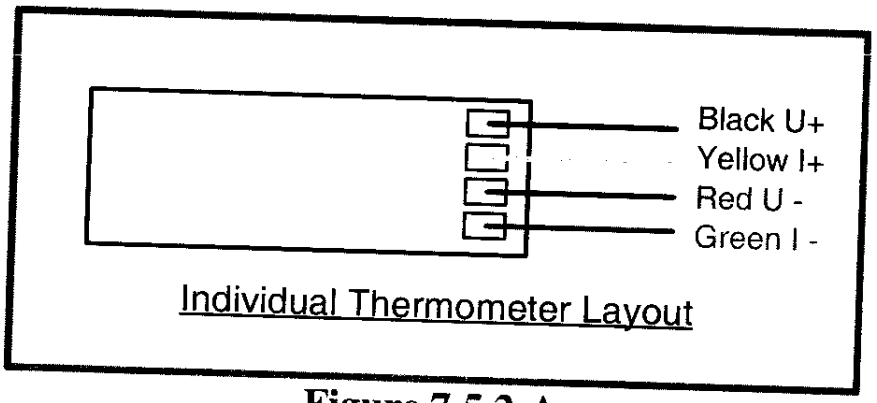

Figure 7.5.2-A

Technician(s) _____ Date 5/12/05

7.6 Perform a continuity check on all RTD's and Warm-Up Heaters. Record the Data below. (1mA). Record the resistance data from the Manufacturer's Traveler below. Compare RTD resistance test results to the resistance results from the Manufacturer's Traveler. Ensure RTD resistances are within **5Ω**. Attach the Manufacturer's RTD papers at the end of this traveler.

To measure the resistance of a Thermometer (RTD):

1. Use Hewlett Packard HP3457A digital multimeter.
2. Record temperature of building within +/- 5 degrees.
3. Press line button to turn line on.
4. Connect wires as shown in Figure below.
5. Push blue button (function key) once.
6. Push OHMF button.
7. Verify arrow in readout is above the 4WΩ (meaning a 4 wire resistance measurement).
8. Read resistance in ohms and record in traveler.

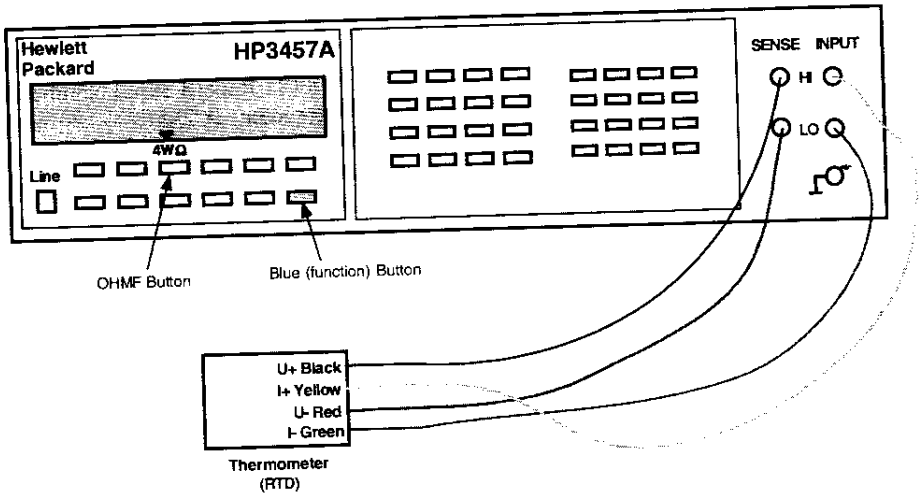

RTD'S			
Building Temperature: 70° F		Time of Test: 2:00	
Serial No.	**Location**	**Measured Ω**	**Mfr. Resistance (Expedition)**
TT8313	Q3 Inst. Bus Side	64.266 Ω	62.190 Ω
TT8323	Q3 Inst. Non-Bus Side	65.989 Ω	64.194 Ω

Cryogenic (Warm-up) Heaters		
Building Temperature: 70° F		Time of Test: 2:00
Location	**Wire No**	**Measured Ω**
Q3 Lead End (IP End)	**EH8313+**	16.6144 Ω
	EH8313-	
Q3 Non-Lead End (Non-IP End)	**EH8323+**	16.2373 Ω
	EH8323-	

Technician(s)

5/9/05
Date

7.7 Hipot RTD's to 100V. Use Droege Serial No. 910 (FNAL Part No. 51330) or equivalent. (Max. Leakage < 0.1 μA)

STOP

Have Crew Chief verify setup and sign below before continuing.

Crew Chief _____ Date 5/9/05

RTD'S		
Building Temperature: 70° F		**Time of Test:** 2:30
Serial No.	**Location**	**Hipot Leakage < 0.1 μA**
TT8313	Q3 Inst. Bus Side	< .1 μA
TT8323	Q3 Inst. Non-Bus Side	< .1 μA

Hipot Cryogenic (Warm-up) Heaters to 300V. Use Droege Serial No. 910 (FNAL Part No. 51330) or equivalent. (Max. Leakage < 0.1 μA)

STOP

Have Crew Chief verify setup and sign below before continuing.

Crew Chief _____ Date 5/9/05

Warm-up Heaters		
Building Temperature: 70 °F		**Time of Test:** 2:30
Location	**Wire No**	**Hipot Leakage < 0.1 μA**
Q3 Lead End (IP End)	**EH8313+**	< .1 μA
	EH8313-	
Q3 Non-Lead End (Non-IP End)	**EH8323+**	< .1 μA
	EH8323-	

Technician(s) _____ Date 5/9/05

7.8 Fill out the Cryogenic Thermometer Traveller that came with the RTD.
Fill out:

- Corrector Tag Name
- Date
- Resistance Measurement
- Temperature (i.e. 77° F)
- Firm/Laboratory (Fermi)
- Checked By (Print Last Name)

Once all information has been filled out, make a copy of the Cryogenic Thermometer Traveller and place the copy in the designated binder.

Technician(s) _____ Date 5/9/05

STOP

Crew Chief _____ Date 5/9/05

7.9 Mount the MCBXA Corrector Mounting Ring (ME-390037) to the MCBXA Corrector Magnet.

Technician(s) _____ Date 5-10-05

7.10 Position and align the MCBXA Corrector Magnet.

L18 (ACTUAL)

Technician(s) _____ Date 5-10-05

*7.11 Tack weld the MCBXA Corrector Mounting Ring (ME-390037) to the Q3 Cold Mass Assembly (ME-390528) per Q3 Cold Mass Welded Assembly (ME-390529).

Weldor _____ Date 5/10/05

7.12 Weld the MCBXA Corrector Mounting Ring (ME-390037) to the Q3 Cold Mass Assembly (ME-390108) Non-Lead End per Q3 Cold Mass Welded Assembly (ME-390529).

Weldor _____ Date 5-24-05

7.13 Disassemble the MCBXA Corrector Magnet from the MCBXA Corrector Mounting Ring (ME-390037).

Technician(s) _____ Date 5-25-05

Cryogenic Thermometer Traveller

DESCRIPTION

Part description:	Cryogenic thermometer	**Top Assembly Identification:**	
Part Identification:	HCQITESCXT-CR013390		
Serial Number:	CX_LS_X17206	**Manufactured By:**	Fermilab

LMQX 04

CABLING

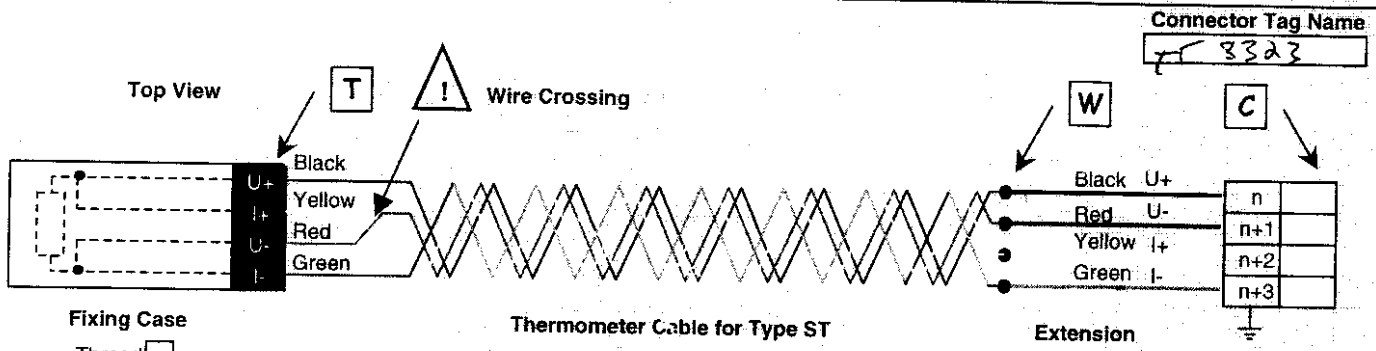

Fixing Case

Thread ☐
Hole ☐
Stud ☐

Thermometer Cable for Type ST

ρ (300 K) = 0.32 Ohm/m
Copper AWG 30
Length = ☐ m

Extension

ρ (300 K) = 0.07 Ohm/m
Copper AWG 24
Length: 0.8 m

CHECKS

Intervention	Date/ DD-MMM-YYYY	Check Point	R(U+,U-,I+,I-) [Ohm] 4W	R(U-,I-) [Ohm] 2W	R(U+,I+) [Ohm] 2W	R(U+,GND) [Ohm] 2W	Temperature [K]	Firm/Laboratory	Checked by
Calibration	04-Feb-2002	T	65.67	n.a	n.a	OVL	Ambient	IPN	Joly
Expedition	12-Mar-2003	T	64.194	0.1	0.1	OVL	293	CERN	Grivat
Reception	9-May-05	T W C	66.98					Fermi	Schewe
		T W C							
		T W C							
		T W C							
		T W C							
		T W C							
		T W C							
		T W C							
		T W C							
		T W C							
		T W C							
		T W C							
		T W C							
		T W C							
		T W C							
		T W C							
		T W C							
		T W C							
		T W C							
		T W C							
		T W C							
		T W C							
		T W C							

Cryogenic Thermometer Traveller

DESCRIPTION

Part description:	Cryogenic thermometer	**Top Assembly Identification:**	
Part Identification:	HCQITESCXT-CR013750		
Serial Number:	CX_LS_X17273	**Manufactured By:**	Fermilab

LMQX 04

CABLING

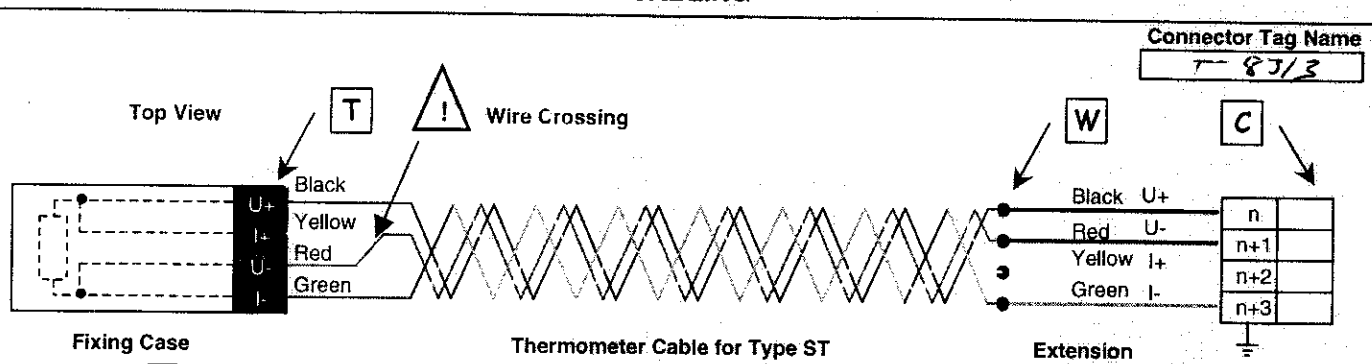

Fixing Case

Thread ☐
Hole ☐
Stud ☐

Thermometer Cable for Type ST

ρ (300 K) = 0.32 Ohm/m
Copper AWG 30
Length = ☐ m

Extension

ρ (300 K) = 0.07 Ohm/m
Copper AWG 24
Length: 0.8 m

CHECKS

Intervention	Date/ DD-MMM-YYYY	Check Point	R(U+,U-,I+,I-) [Ohm] 4W	R(U-,I-) [Ohm] 2W	R(U+,I+) [Ohm] 2W	R(U+,GND) [Ohm] 2W	Temperature [K]	Firm/Laboratory	Checked by
Calibration	04-Feb-2002	T	64.02	n.a	n.a	OVL	Ambient	IPN	Joly
Expedition	12-Mar-2003	T	62.490	0.1	0.1	OVL	293	CERN	Grivat
Reception	9-May-2005	T W C	64.266					Fermi	Schaede
		T W C							
		T W C							
		T W C							
		T W C							
		T W C							
		T W C							
		T W C							
		T W C							
		T W C							
		T W C							
		T W C							
		T W C							
		T W C							
		T W C							
		T W C							
		T W C							
		T W C							
		T W C							
		T W C							
		T W C							
		T W C							
		T W C							

7.14 Splice the Cold Mass voltage taps to the wire bundle. Verify the splices electrically.

Technician(s) _____ Date 5/12/2005

7.15 Attach wires using putty and install the Voltage Tap Splice Cover Block (MC-430146).

Technician(s) _____ Date 5-14-05

7.16 Mount the MQSX Corrector Mounting Ring (MD-390209) to the MQSX Corrector Magnet.

Technician(s) _____ Date 5-9-05

7.17 Position and align the MQSX Corrector Magnet per Q3 Cold Mass Welded Assembly (ME-390529).

Technician(s) _____ Date 5-9-05

7.18 Tack weld the MQSX Corrector Mounting Ring (MD-309209) to the Q3 Cold Mass Assembly (ME-390528) per Q3 Cold Mass Welded Assembly (ME-390529).

Weldor _____ Date 5/10/05

7.19 Weld the MQSX Corrector Mounting Ring (MD-309209) to the Q3 Cold Mass Assembly (ME-390528) Lead End per Q3 Cold Mass Welded Assembly (ME-390529).

Weldor _____ Date 5-24-05

remove 7.20 Disassemble the MQSX Corrector Magnet from the MQSX Corrector Mounting Ring (MD-309209).

Technician(s) _____ Date _____

8.0 Installation of MQSX Corrector Coil

8.1 Move the MQSX Corrector Magnet up against the Mounting Ring on the Q3 Cold Mass and bolt the MQSX Corrector Magnet to the Q3 Cold Mass using the Silver Plated Mounting Screw and torque bolts to 500 in.-lbs. Shim between the corrector and flange as necessary.

Technician(s) _____ Date _____

8.2 Verify alignment of MQSX Corrector Magnet as per Q3 Module Assembly (ME-369900).

STOP

Crew Chief _____ Date 5/25/05

STOP

Responsible Authority/Physicist _____ Date 5/25/05

8.3 Tack weld bolts and washers for mounting MQSX Corrector Magnet into place per Q3 Cold Mass Welded Assembly (ME-390529).

Weldor(s) _____ Date 5/25/05

8.4 Solder Corrector Wires per Q3 Module Assembly (ME-369900) and as shown in Figure 8.5-A.

Technician(s) _____ Date 5-28-05

8.5 Install voltage taps on MQSX corrector leads. One tap is to be soldered to the "A" Lead of each corrector element. Wire label is shown below.

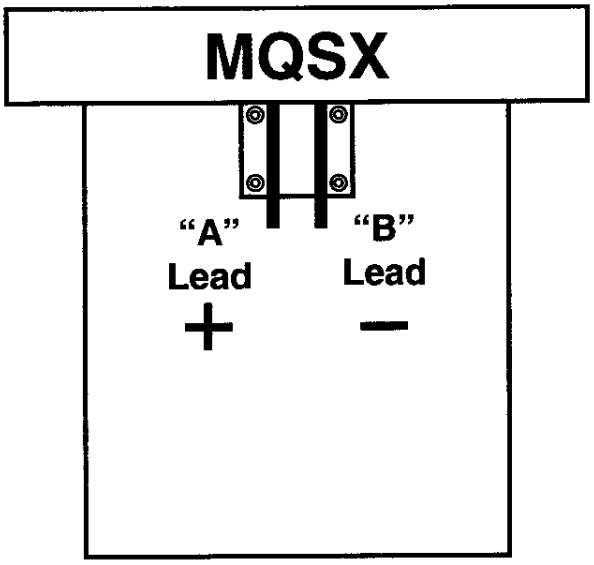

Overhead View

Corrector Assembly	Corrector Element	Label
MQSX	MQSX	A+ lead Q3A2 (skew quadrupole) voltage tap EE8223 (VTA2)

Technician(s) _____ Date 5-28-05

Final corrector preparations

9.0 Installation of MCBXA

9.1 Move the MCBXA Corrector Magnet up against the Mounting Ring on the Q3 Magnet, and bolt the MCBXA Corrector Magnet to the Q3 Cold Mass using the 3" Silver Plated Mounting Screw (MA-390247) and torque bolts to 500 in-lbs. per Note 4 of Q3 Cold Mass Welded Assembly (ME-390529). Shim between the Corrector and Flange as necessary.

Technician(s) _____ Date 5/19/05

9.2 Verify Alignment of MCBXA Corrector Magnet as per Q3 Cold Mass Welded Assembly (ME-390529).

~~Technician(s)~~ _____ Date 5/18/05

STOP

Responsible Authority/Physicist _____ Date 5/18/05

9.3 Tack weld bolts and washers for mounting Corrector into place per Q3 Cold Mass Welded Assembly (ME-390529).

Weldor(s) _____ Date 5/25/05

MCSOX torquing

MQSX torquing

Verify Alignment of MCBXA, MCSOX, MQSX Correctors

9.3 ___ weld MCBXA

X X weld MCSOX

X X weld MQSX

9.4 Route MCBXA Corrector Coil Wires as shown in Figure 9.4-A below and per Q3 Cold Mass Welded Assembly (ME-390529).

Before 9.1

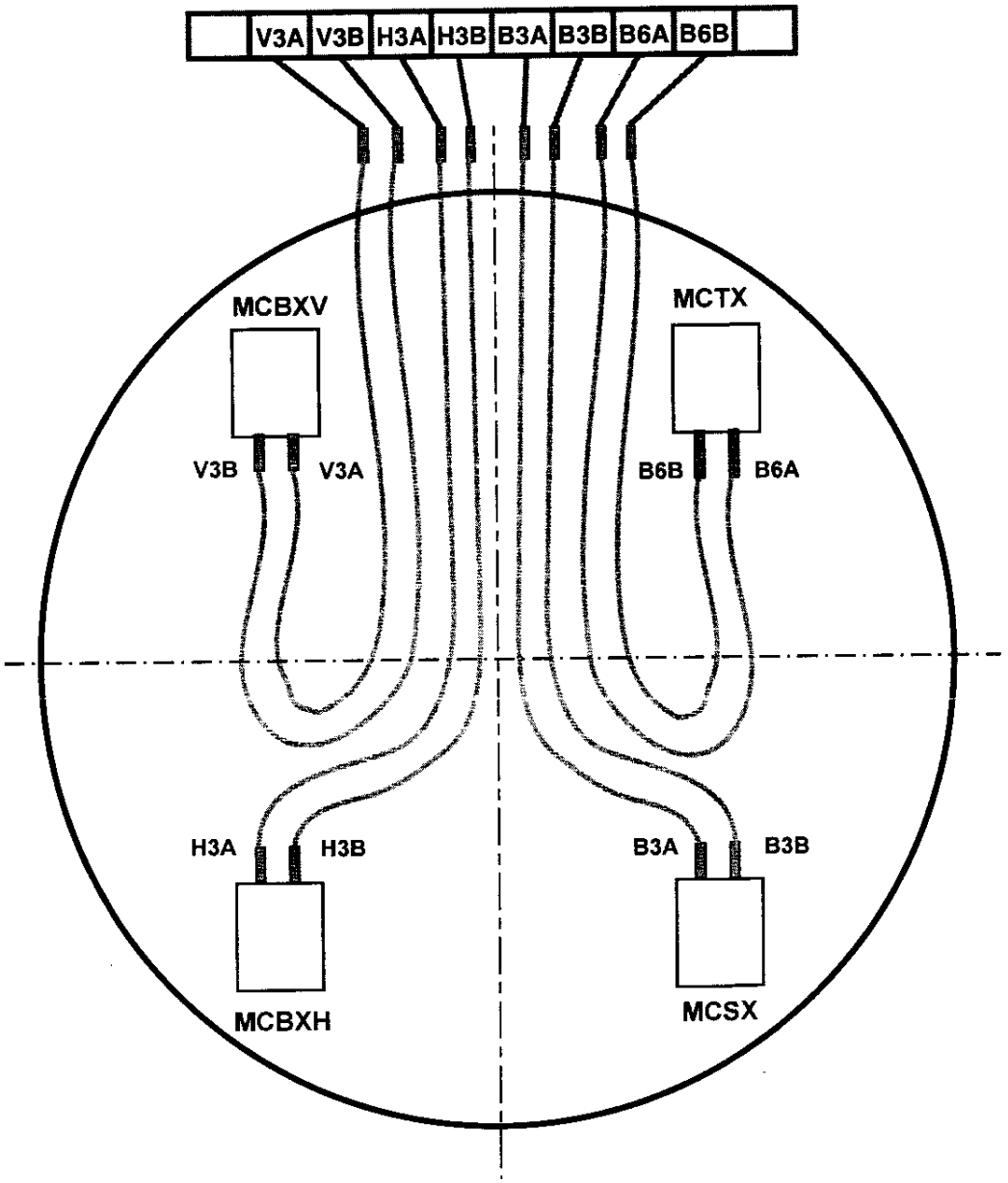

End View of MCBXA for Q3
(in "up" position)

Looking into end of correction coil from DFBX to Q3

Figure 9.4-A

Technician(s) _____ Date 5/12/05

9.5 Solder Corrector Wires per Q3 Module Assembly (ME-369900) and as shown in Figure 9.4-A.

Technician(s) Date 5/12/05

9.6 Install voltage taps on MCBXA corrector leads. One tap is to be soldered to the "A" Lead of each corrector element. Wire labels are shown below.

Corrector Assembly	Corrector Element	Label
MCBXA	MCBXH	A+ lead Q3H3 (skew dipole) voltage tap EE8123 (VTH3)
	MCBXV	A+ lead Q3V3 (normal dipole) voltage tap EE8113 (VTV3)
	MCSX	A+ lead Q3B3 (normal sextupole) voltage tap EE8313 (VTB3)
	MCTX	A+ lead Q3B6 (normal dodecapole) voltage tap EE8613 (VTB6)

Technician(s) Date 5/12/05

10.0 Installation of MCSOX

10.1 Mount the MCSOX Corrector Magnet to the MCSOX Corrector Mounting Ring (ME-390664).

Technician(s) _____ Date 5-12-05

10.2 Slide the MCSOX Corrector Magnet & MCSOX Corrector Mounting Ring (ME-390664) up to the MCBXA Corrector Magnet.

Technician(s) _____ Date 5-13-05

10.3 Position the MCSOX Corrector Magnet ~~radial (Scribe Line at 0°)~~ Using corrector pre Alignment plates

Technician(s) _____ Date 5-13-05

10.4 Position the MCSOX Corrector Magnet longitudinally. (The gap between the MCBXA Magnet and the Mounting Ring should be approximately 15mm.)

Technician(s) _____ Date 5-13-05

10.5 Tack weld MCSOX Corrector Mounting Ring (ME-390664) as per Q3 Cold Mass Welded Assembly (ME-390529).

Weldor(s) _____ Date 5/13/05

10.6 Weld the MCSOX Corrector Mounting Ring (ME-390664) as per Q3 Cold Mass Welded Assembly (ME-390529).

Weldor(s) _____ Date 5/25/05

DR HQQD573 (4208) Done

10.7 Wire the MCSOX Corrector Magnet.

Technician(s) _____ Date 6 30 05

10.8 Verify alignment of the MCSOX Corrector Magnet.

Technician(s) _____ Date 5-25-05

STOP

Responsible Authority/Physicist _____ Date 5/25/05

Tack weld Q3 Cold Mass Welded Assembly (ME-390529) Remove

10.9 Tack weld the MCSOX Corrector Magnet hardware as per Q3 Cold Mass Welded Assembly (ME-390529).

Weldor(s) _____ Date 5/25/05

Done

10.10 Solder Corrector Wires per Q3 Module Assembly (ME-369900).

Technician(s) _____ Date 6 30 05

10.11 Install voltage taps on MCSOX corrector leads. One tap is to be soldered to the "A" Lead of each corrector element. Wire labels are shown below.

Corrector Assembly	Corrector Element	Label
MCSOX	MCOSX	A+ lead Q3A4 (skew octupole) voltage tap EE8423 (VTA4)
	MCOX	A+ lead Q3B4 (normal octupole) voltage tap EE8413 (VTB4)
	MCSSX	A+ lead Q3A3 (skew sextupole) voltage tap EE8323 (VTA3)

Technician(s) _____ Date 6 30 05

Traveler Title:	Specification No:	Revision:	DR No:
LHC Q3 LMQXC Module Assembly Traveler	333729	B	4208

Step No:	Drawing No:	Routing Form No:	Serial No:	Rework ID:
10.7	430065		LMQXC04	0

Discrepancy Description:

While evaluating correct wiring procedures of the MCSOX corrector, it was observed that the entire magnet/corrector bus was built incorrectly.

Originator: Damon Bice

Date: 5/19/2005

Cause of Nonconformance:

Technician Error. Bus was built with the Corrector and Lead sides reversed.

Responsible Authority: Rodger Bossert

Date: 9/1/2005 9:18:33 AM

Disposition:

Remove bus and replace with new bus built to correct configuration. (Re-issued TR-333729 LMQXC04-1 per production request. - John Szostak 6/27/05)

Responsible Authority: Rodger Bossert

Date: 9/1/2005

Corrective Action to Prevent Recurrence:

Add step to Traveler to verify Bus configuration is per Drawing ME-430065. (TRR No. 1766)

Responsible Authority: Rodger Bossert

Date: 9/1/2005

Corrective Action/Disposition Verified By: John Szostak

Date: 9/12/2005 3:11:02 PM

Will Configuration be affected?: ☐ YES ☑ NO

Identified problem area:

☐ Material ☐ Manpower ☑ Method ☐ Machine ☐ Measurement

Reviewed By: Bob Jensen

Date: 9/13/2005

4.0 Q3 Magnet Placement (Module Assembly Tooling)

4.1 Configure tooling for Q3 Cold Mass Assembly (ME-390528) per Final Cold Mass Assembly Stat – Support and Clamping Fixture (ME-369768).

N/A

Technician(s) Date

4.2 Configure tooling for Corrector Mounting per Cold Mass / Cryostat Station Corrector Support Fixture (ME-369780), 13.780 Diameter Corrector Magnet.

N/A

Technician(s) Date

4.3 Configure tooling for End Dome Mounting per Cold Mass Cryostat Station Final Assembly (ME-369765, View E-E).

N/A

Technician(s) Date

4.4 Move the Q3 Cold Mass to the Cold Mass Module Assembly Tooling, placing it nearest the West End of ICB, with the Lead End of the Magnet facing west as per Q3 Cold Mass Welded Assembly (ME-390529).

N/A

Technician(s) Date

5.0 Bus Assembly Installation

5.1 Measure the length of the Cold Mass and record below.

Cold Mass Length: 3

N/A
Technician(s) Date

5.2 Add four feet (48 inches) to the Cold Mass Length and record below. This will be the top piece.

Cold Mass Length from step 5.1: 22'

Add: **+ 48 in.**

Length of top piece: 26'

N/A
Technician(s) Date

STOP

Crew Chief Date 6-27-05

5.3 Cut a piece of Nomex (MB-430064) equal to the total length recorded in step 5.2. This will be referred to as the top piece.

Technician(s) Date 6/27/05

5.4 Record the total length of the top piece, recorded in step 5.2, below. Multiply the total by 2 and record the number below. This will be the length of the bottom piece.

Length of top piece: 26

Multiply by 2: **x 2**

Length of bottom piece: 52

Technician(s) Date 6/27/05

STOP

Crew Chief Date 6-27-05

5.5 Cut a piece of Nomex (MB-430064) equal to the total length recorded in step 5.4. This will be referred to as the bottom piece.

Technician(s) Date 6/27/05

5.6 Pull the two pieces of Nomex (MB-430064) through the Bus Slot. Leave two feet of Nomex extending past the end of the Cold Mass at the Lead End and Non-Lead End. Fold top piece over top of Cold Mass and fold bottom piece under bottom of Cold Mass. (As shown n figure 5.6 below)

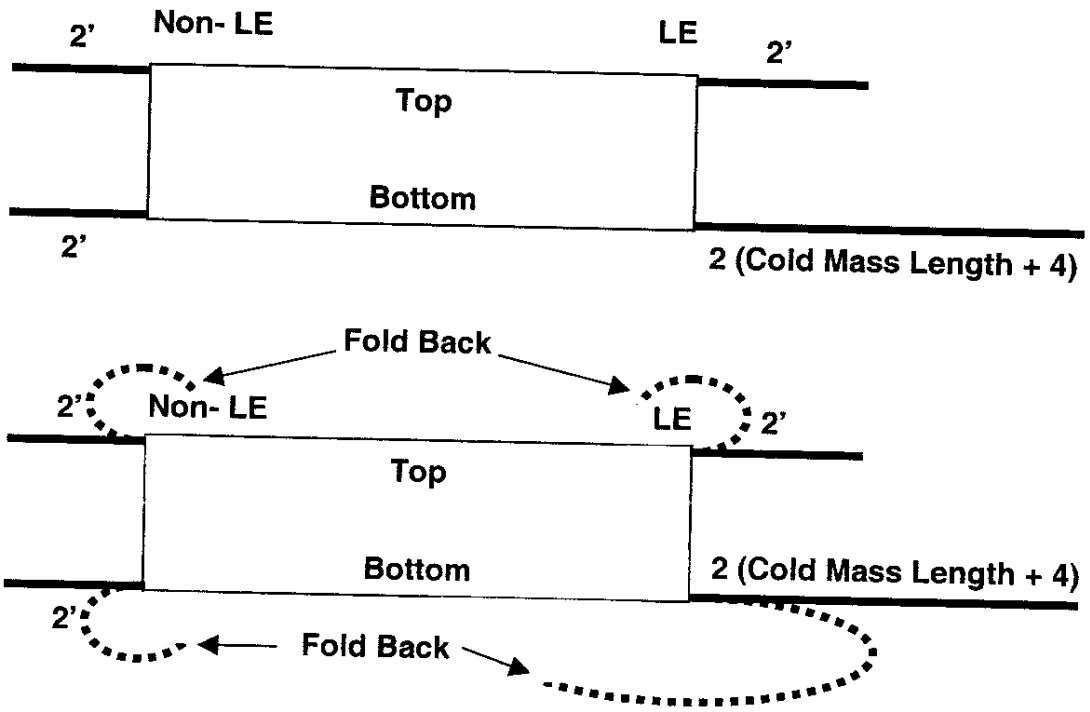

Figure 5.6

Technician(s) Date 6-27-05

5.7 Starting at the Lead End, slide the Lead and Corrector Coil Bus Assembly (MB-430065) into Magnet Bus Slot between the two pieces of Nomex (MB-430064). The bottom piece of Nomex will move with the bus. Pull the bottom piece as it is being fed into the Cold Mass.

Technician(s) Date 6-27-05

5.8 Cut Nomex (MB-430064) equal to the Length of the Cold Mass. (See Step 5.1 for reference)

Technician(s) Date 6/27/05

6.0 Q3 Cold Mass Alignment

6.1 Rotate the Q3 Cold Mass, with the Power Leads facing up, into the proper orientation as shown in Figure 6.1-A.

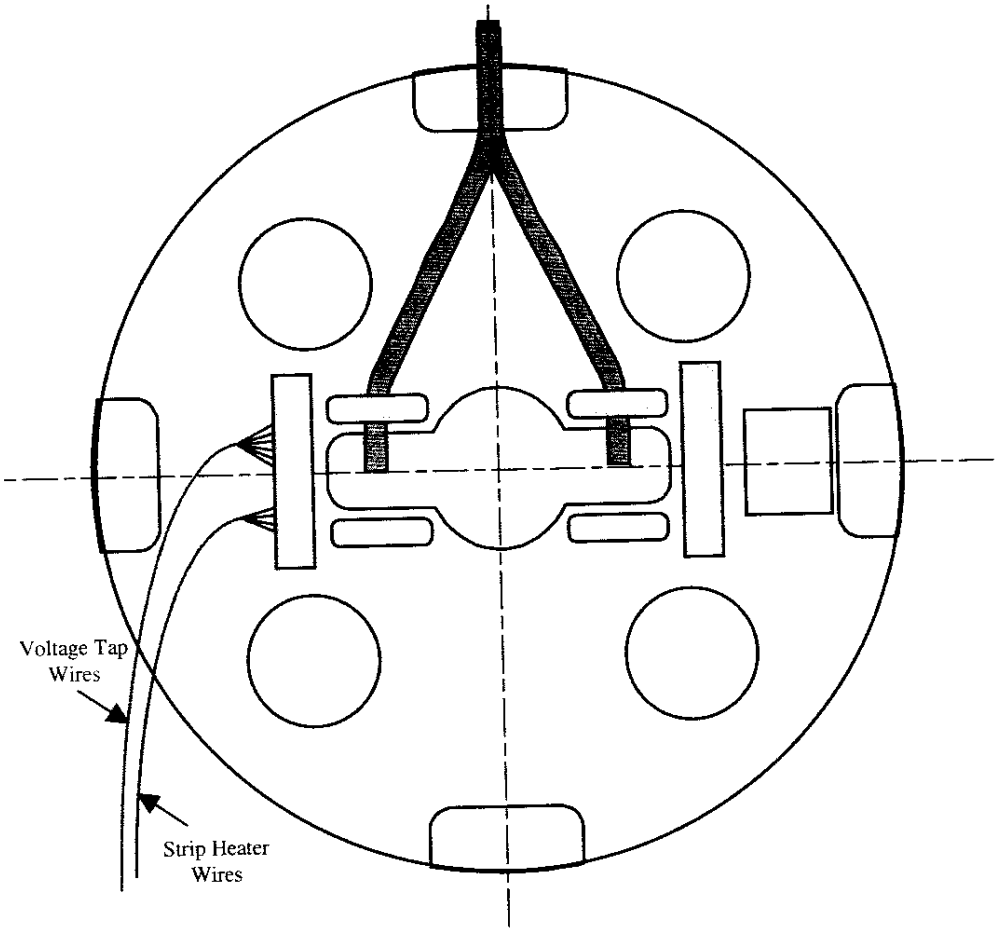

Looking at Lead End of Q3

Figure 6.1-A

N/A
Technician(s) Date

6.2 Perform a stretched wire measurement of the system to align the Cold Mass within ± .2 mR.

N/A
Responsible Authority/Physicist Date

12.0 Splicing the Power Leads

12.1 At the IP End, set up the Power Leads for splicing as shown in the Q3 Module Assembly Drawing (ME-369900).

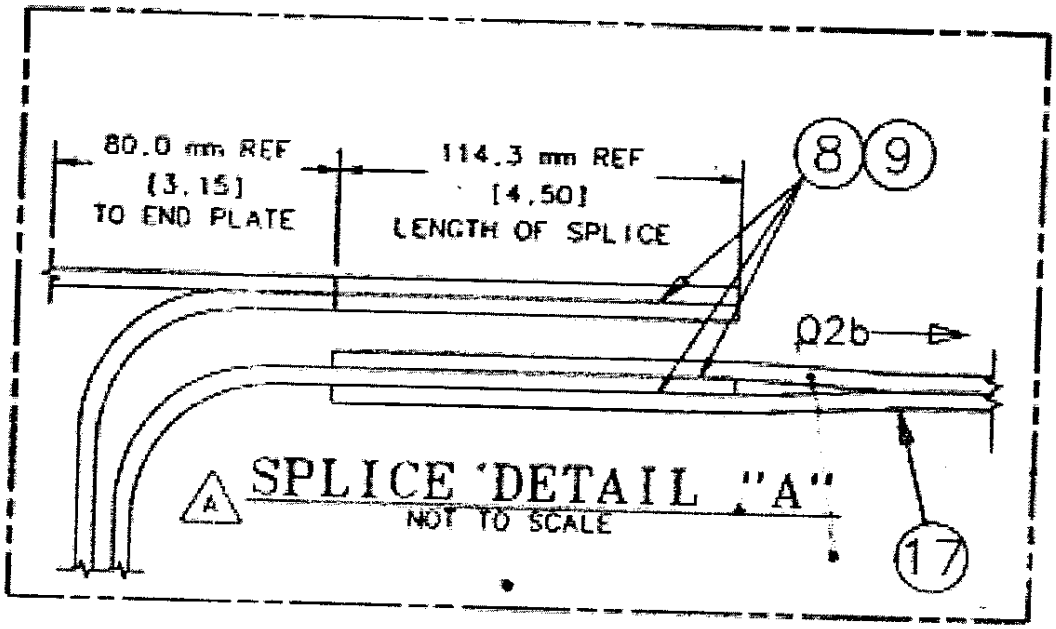

Figure 12.1-A
(ME-369900 - Rev. A, Sheet 3 of 5)

Technician(s) _____ Date 6-27-05

12.2 Construct/ Obtain Expansion Loop Tail per Q3 Module Assembly Insulated Expansion Loop Tail (MB-430145).

Technician(s) _____ Date 6-27-05

12.3 Solder the Lower Lead to the expansion Loop Tail from Step 8.2 as per Q3 Module Assembly Drawing (ME-369900).

Technician(s) _____ Date 6/27/05

12.4 Solder the Upper Magnet Lead (Terminal "A", Quadrant 4) to the Lower 8kA Bus as per Q3 Module Assembly Drawing (ME-369900).

Technician(s) _____ Date 6/27/05

N/A
REST
of Traveler

12.5 Insulate each splice with 2/3 overlap, .002 x 3/8 wide Kapton, (MA-292722).

Technician(s) _____ Date _____

12.6 Insert a piece of .005 Kapton between splices.

Technician(s) _____ Date _____

12.7 Put splices together and insulate splice area with ¾ overlap, .002 x 3/8 wide Kapton (MA-292722).

Technician(s) _____ Date _____

12.8 Attach Q3 Bus Splice Clamp Assembly (MD-430031) to Q3 Lead as per Q3 Module Assembly (ME-369900).

Technician(s) _____ Date _____

12.9 Attach IP (Lead) End Buss Crossover Block Assembly (MD-430095) as per Q3 Module Assembly (ME-369900).

Technician(s) _____ Date _____

12.10 Attach Cable Clamp Assemblies as per Q3 Module Assembly (ME-369900).

Technician(s) _____ Date _____

12.11 Solder MQSX Corrector Wires.

Technician(s) _____ Date _____

N/A

11.0 Dome Setup

11.1 Attach IP End Dome (MD-390221) (Q3) to the End Dome Positioning Fixture (MD-369776).

Technician(s) _____ Date 7-1-05

11.2 Align IP End Dome (MD-390221) as shown in Q3 Cold Mass Welded Assembly (ME-390529).

Technician(s) _____ Date 7-1-05

11.3 Level the IP End Dome (MD-390221) using the Ball Socket (MD-369777) and the Mini Level.

Technician(s) _____ Date 7-1-05

11.4 Mark the IP End Dome (MD-390221) and the End Plate with a Horizontal Witness Line. This Step will be used in Step 13.3 to reposition the Domes prior to Welding.

Technician(s) _____ Date 7-1-05

11.5 Remove the IP End Dome (MD-390221) from the Tooling.

Technician(s) _____ Date 7-1-05

11.6 Attach Non-IP End Dome (MD- 390668) (Q3) to the End Dome Positioning Fixture (MD-369776).

Technician(s) _____ Date 7/1/05

11.7 Align Non-IP End Dome (MD- 390668) as shown in Q3 Cold Mass Welded Assembly (ME-390529).

Technician(s) _____ Date 7/1/05

11.8 Level the Non-IP End Dome (MD- 390668) using the Ball Socket (MD-369777) and the Mini Level.

Technician(s) _____ Date 7/1/05

11.9 Feed the Electrical wires/bus through the proper ports as the Non-IP End Dome (MD- 390668) is brought into position against the End Plate.

Technician(s) _____ Date 7/1/05

11.10 Mark the Non-IP End Dome (MD- 390668) and the End Plate with a Horizontal Witness Line. This Step will be used in Step 18.6 to reposition the Extension Tubes prior to Welding.

Technician(s) _____ Date 7/1/05

11.11 Remove the Non-IP End Dome (MD- 390668) from the Tooling.

Technician(s) _____ Date 7/1/05

11.12 Perform preliminary reference measurements before moving the Cold Mass to an Assembly Table.

Check one (Upper / Lower slash) and then record the reference measurement and Mini-level No.

Upper Slash ☑

Lower Slash ☐

measurement taken from lead end to Non-lead end NO TRAV change needed

Take measurement while looking from Non-Lead End toward the Lead End.

Reference Measurement: 103

Mini-level No. 2

Technician(s) _____ Date 5-10-05

Responsible Authority/Physicist _____ Date 7/5/05

11.13 Move the Cold Mass to an Assembly Table.

Technician(s) _____ Date 5-15-05

12.0 Splicing the Power Leads

12.1 At the IP End, set up the Power Leads for splicing as shown in the Q3 Module Assembly Drawing (ME-369900).

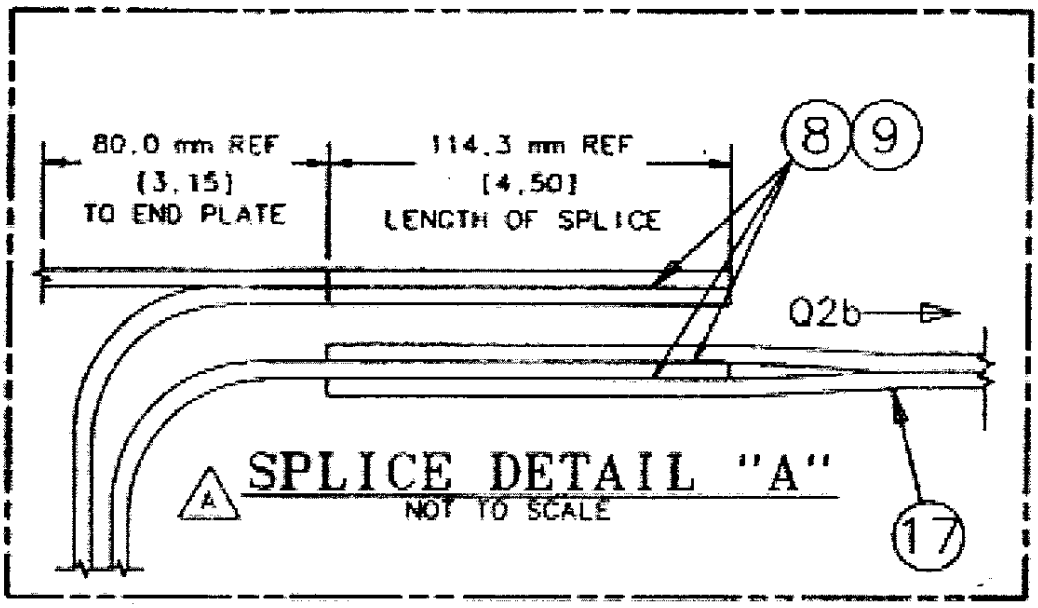

Figure 12.1-A
(ME-369900 - Rev. A, Sheet 3 of 5)

Technician(s) _____ Date 5-10-05

12.2 Construct / Obtain Expansion Loop Tail per Q3 Module Assembly Insulated Expansion Loop Tail (MB-430145).

Technician(s) _____ Date 5-10-05

12.3 Solder the Lower Lead to the expansion Loop Tail from Step 8.2 as per Q3 Module Assembly Drawing (ME-369900).

Technician(s) _____ Date 5-10-05

12.4 Solder the Upper Magnet Lead (Terminal "A", Quadrant 4) to the Lower 8kA Bus as per Q3 Module Assembly Drawing (ME-369900).

Technician(s) _____ Date 5-10-05

12.5 Insulate each splice with 2/3 overlap, .002 x 3/8 wide Kapton, (MA-292722).

Technician(s) _____ Date 6/27/05

12.6 Insert a piece of .005 Kapton between splices.

Technician(s) _____ Date 6/27/05

12.7 Put splices together and insulate splice area with ¾ overlap, .002 x 3/8 wide Kapton (MA-292722).

Technician(s) _____ Date 6/27/05

12.8 Attach Q3 Bus Splice Clamp Assembly (MD-430031) to Q3 Lead as per Q3 Module Assembly (ME-369900).

Technician(s) _____ Date 6-27-05

12.9 Attach IP (Lead) End Buss Crossover Block Assembly (MD-430095) as per Q3 Module Assembly (ME-369900).

Technician(s) _____ Date 6-28-05 ~~6/28/05~~

12.10 Attach Cable Clamp Assemblies as per Q3 Module Assembly (ME-369900).

Technician(s) _____ Date 6/29/05

12.11 Solder MQSX Corrector Wires.

Technician(s) _____ Date 6-28-05

12.12 Route Cable and Corrector Leads on IP (Lead) End as shown below and per Q3 Module Assembly (ME-369900).

Lead Bus Orientation through Q3

R. Bossert 3-29-04

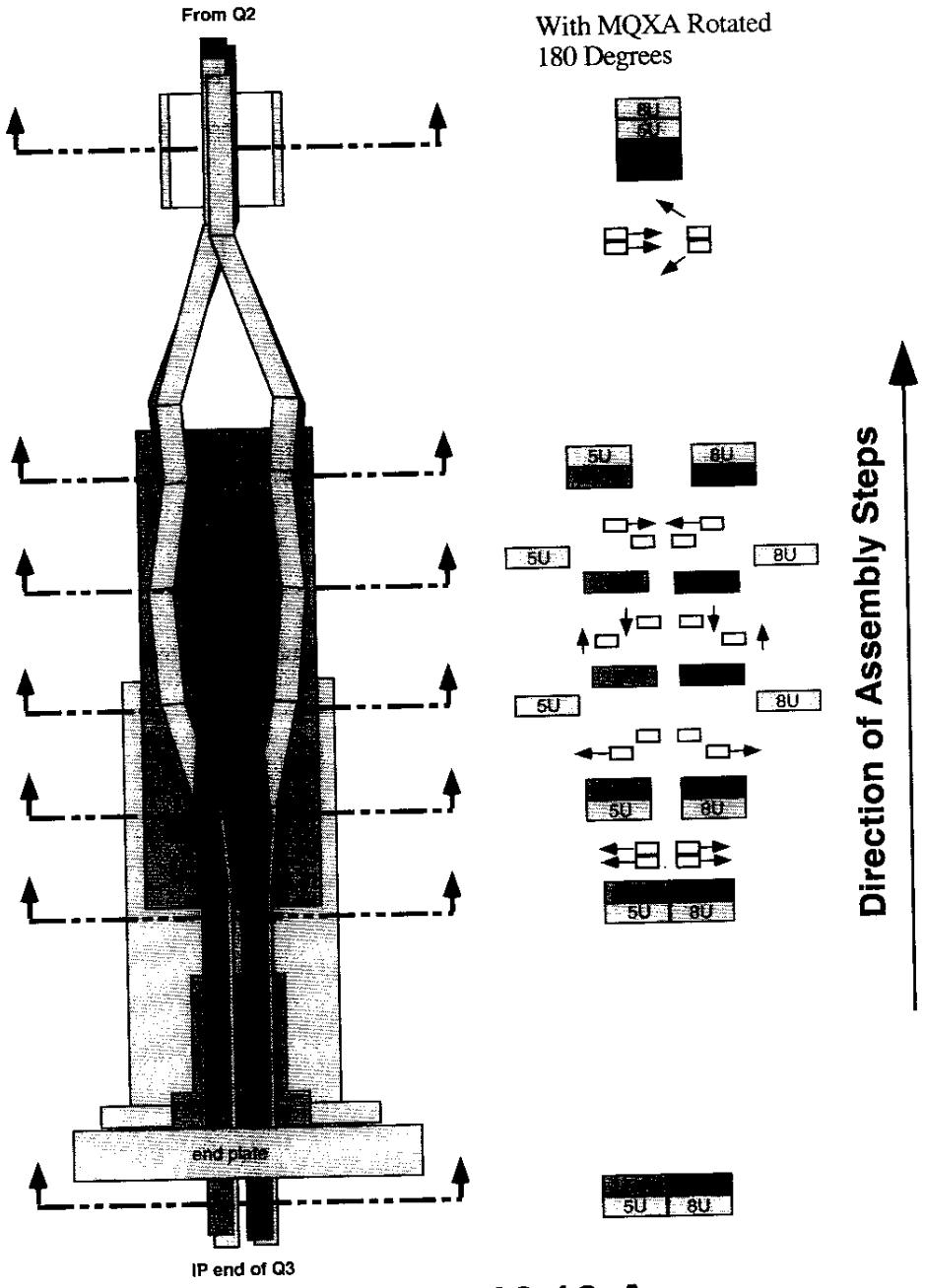

Figure 12.12-A

Technician(s)

Date 6-28-05

12.13 At the IP End, attach Spider Assembly (MD-430072) as per Q3 Module Assembly (ME-369900).

Technician(s) _____ Date 6/28/05

12.14 Attach Non-IP End Bus Crossover Block Assembly (MD-430081) as per Q3 Module Assembly (ME-369900).

Technician(s) _____ Date 6-27-05

13.0 Configure MCSOX Corrector Coil Wires

13.1 Attach the MCSOX Splice Plate Mounting Ring (ME-430129), the MCSOX Corrector Splice Face Plate (ME-430130), and the MCSOX Splice Plate Mounting Bars (ME-430128) as per Q3 Module Assembly (ME-369900).

Technician(s) _____ Date 6-29-05

13.2 Route wires as shown in figure below and per Q3 Module Assembly (ME-369900).

Technician(s) O. Fuang Date 6 30 05

13.3 Solder Wires per Q3 Module Assembly (ME-369900) and Figure 13.0. (Next Page)

Technician(s) O. Fuang Date 6 30 05

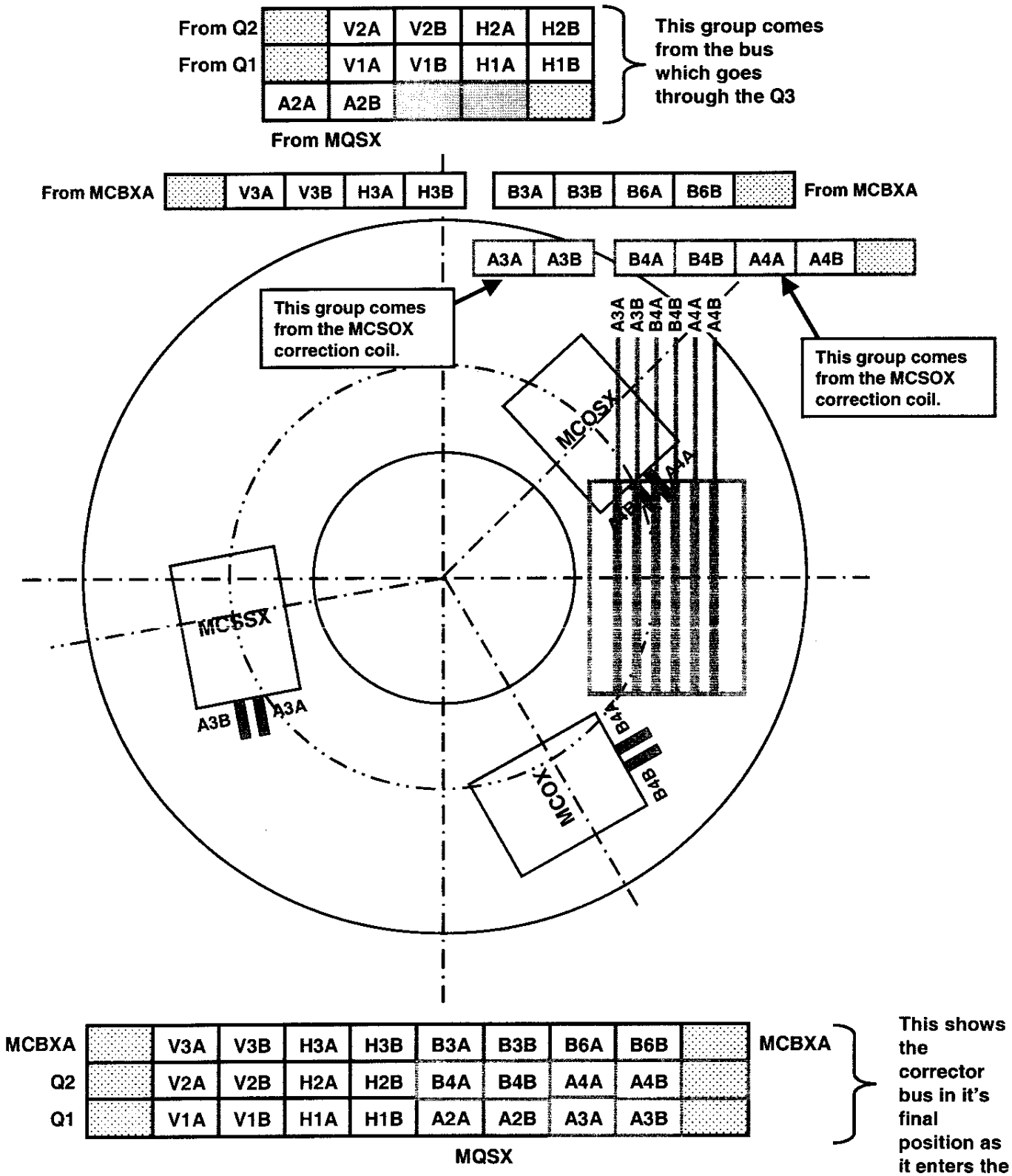

Looking into Non-IP End of Q3

Looking into end of correction coil from DFBX into Q3

Figure 13.0-A

14.0 Mount MCSOX Bus and Expansion Loop Hardware

14.1 Mount the Side Cable Clamp Assembly (ME-430103) as per Q3 Module Assembly (ME-369900).

Technician(s) _____ Date 6/28/05

14.2 Mount the Non-IP (Non-Lead End) Corrector Bus Bundle Bracket (ME-430134) as per Q3 Module Assembly (ME-369900).

Technician(s) _____ Date 6/28/05

15.0 Assemble Bus and Expansion Loop on Non-IP (Non-Lead) End

15.1 Route Non-IP End cables into crossover assembly on Non-IP End as shown in figure 15.1-A.

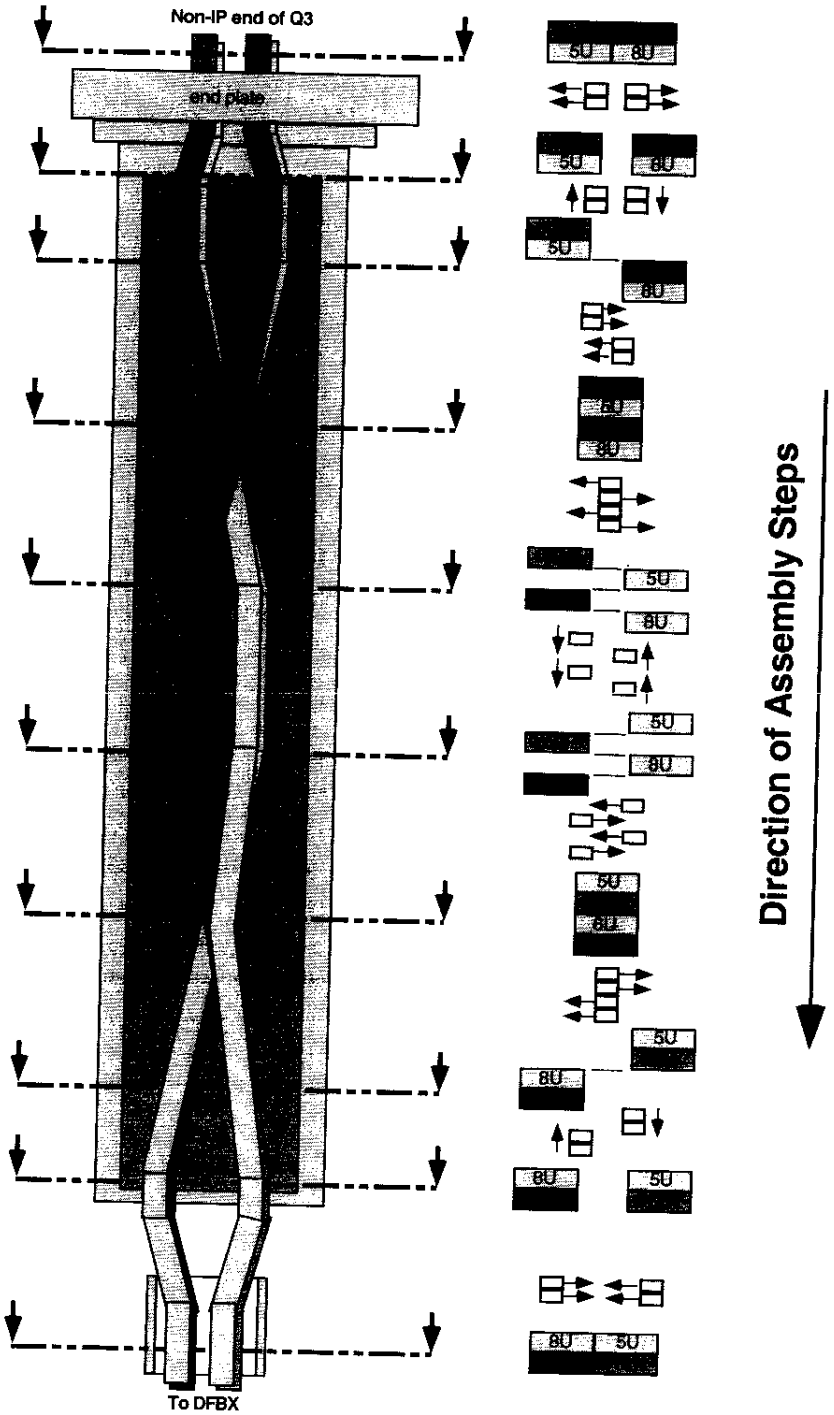

Figure 15.1-A

Technician(s)

6-27-05
Date

15.2 Configure Bus Expansion Loop as per Q3 Module Assembly (ME-369900).

Technician(s) _____ Date 6/29/05

15.3 At the Non-IP End, attach Spider Assembly (MB-430096) as per Q3 Module Assembly (ME-369900).

Technician(s) _____ Date 7/1/05

16.0 Electrical Inspection

16.1 Perform an electrical inspection on each of the Individual Quadrants and the Cold Mass. Refer to the Valhalla and Leader Free Standing Coil Measurement Procedure (ES-292306).

To measure the Resistance of a Q3 Cold Mass:

1. Use Valhalla Scientific 4300B digital micro-ohmmeter.
2. Set Test Current to 0.1 amp.
3. Set Scale to 2V full scale.
4. Turn temperature compensation on.
5. Turn test current off.
6. Connect I_{HI} to "A" Lead as shown in figure 16.1-A.
7. Connect I_{LO} to "B" Lead as shown in figure 16.1-A.
8. Turn test current on.
9. Connect V_{HI} and V_{LO} to voltage taps as shown in resistance table.
10. To measure Total with leads, connect V_{HI} to "A" Lead and V_{LO} to "B" Lead.
11. At the IP End, jumper the 8Ka leads as shown in Figure 16.1-A.
12. Read resistance and record in traveler.

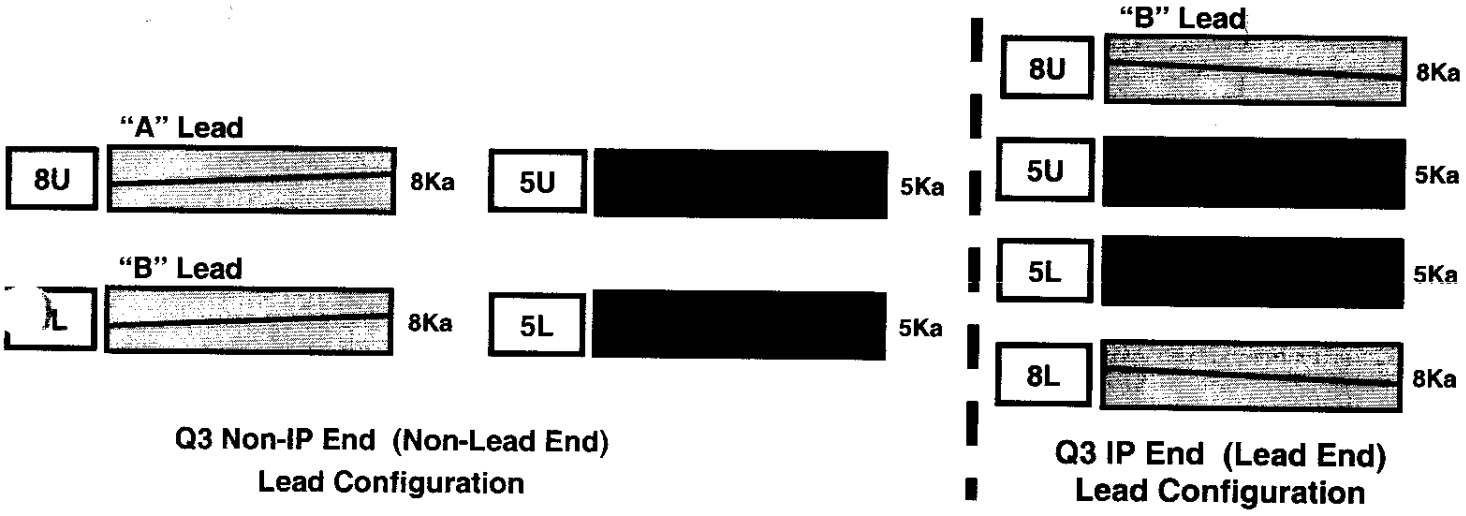

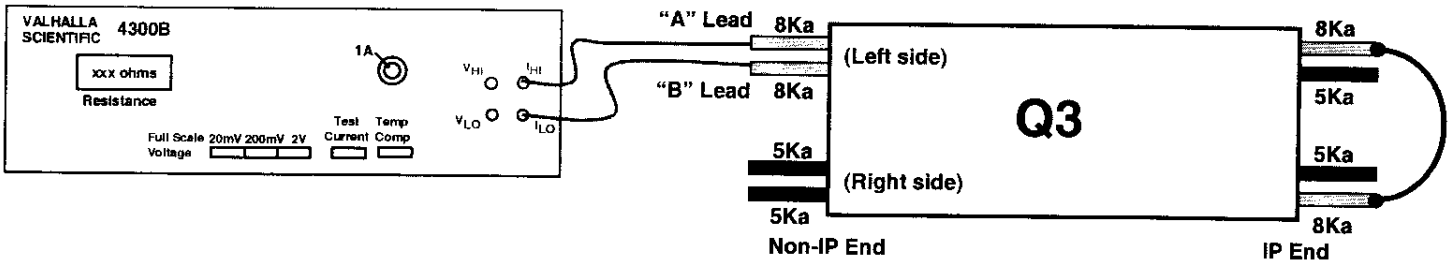

Figure 16.1-A

(Q3) Resistance				Nominal 3.35 to 3.45 Ω
Voltage Tap Serial Numbers				Total Resistance
Connect	Fermi	CERN	KEK	
V_{HI}	VTa1Q3	EE1113	a1	3.441 Ω
V_{LO}	VTc1Q3	EE1213	c1	
V_{HI}	VTc1Q3	EE1213	c1	3.440 Ω
V_{LO}	VTb1Q3	EE1313	b1	
V_{HI}	VTa1Q3	EE1113	a1	6.876 Ω
V_{LO}	VTb1Q3	EE1313	b1	
				Total Resistance with Leads
				Nominal 6.75 to 6.85 Ω
V_{HI}	Q4 Power Lead			6.895 Ω
V_{LO}	Q3 Power Lead			

Both Nominally 6.75 to 6.85.

Technician(s) [signature] / [signature]

Date 6 7/6/05

Check resistance of Redundant Voltage Taps.

Q3 Redundant Voltage Taps				Nominal 3.35 to 3.45 Ω
Connect	Fermi	CERN	KEK	Resistance
V_{HI}	VTa2Q3	EE1123	a2	3.435 Ω
V_{LO}	VTc2Q3	EE1223	c2	
V_{HI}	VTc2Q3	EE1223	c2	3.436 Ω
V_{LO}	VTb2Q3	EE1323	b2	

Technician(s) [signature] / [signature]

Date 7/6/05

To measure Ls and Q of a Q3 Cold Mass:

1. Use Agilent 4263B LCR Meter.
2. Turn power on by pushing line button. Wait 30 seconds until display screen is lit.
3. Recall program #1. To do this, push recall (Rcl), then push #1, then push Enter.
4. Push Auto/Hold button to release hold.
5. Verify that the frequency displayed in the upper right corner of the display screen is 1000 Hz and the level recorded in the lower right corner of the display screen is 1V or 1000 mV.
6. Connect H_{cur} to "A" power lead as shown in figure 16.1-B.
7. Connect L_{cur} to "B" power lead as shown in figure 16.1-B.
8. Connect H_{pot} and L_{pot} buttons to voltage taps as shown below.
9. Read Ls and Q from display and record in table.

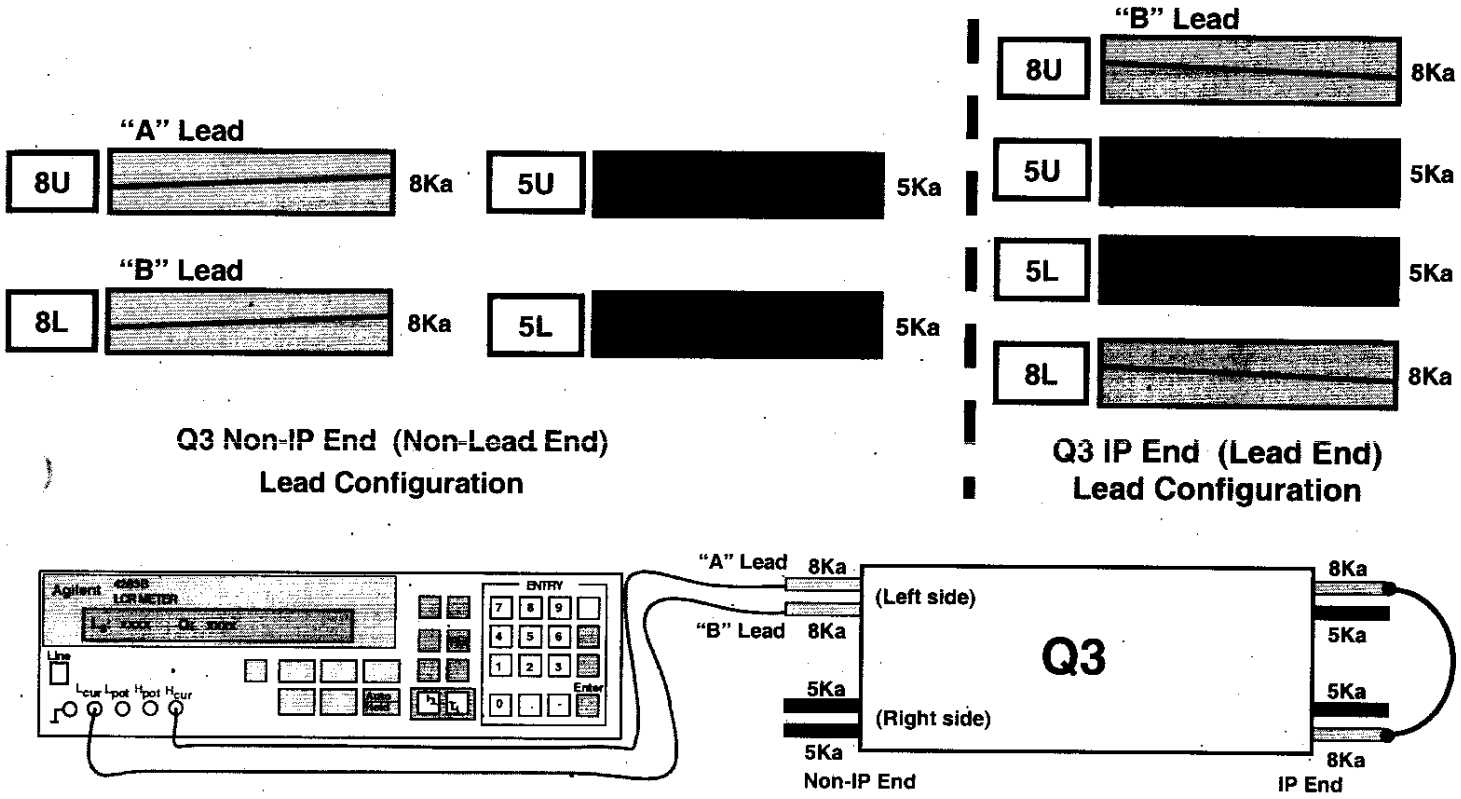

Figure 16.1-B

(Q3) Inductance				Nominal 15 to 16 mH
Voltage Tap Serial Numbers				Total Inductance
Connect	Fermi	CERN	KEK	
H_{POT}	VTa1Q3	EE1113	a1	15.5 mH
L_{POT}	VTc1Q3	EE1213	c1	
H_{POT}	VTc1Q3	EE1213	c1	15.6 mH
L_{POT}	VTb1Q3	EE1313	b1	

				Nominal 30 to 32 mH
				Total Inductance
H_{POT}	VTa1Q3	EE1113	a1	31.1 mH
L_{POT}	VTb1Q3	EE1313	b1	

(Q3) Q-Factor				Nominal 1.0 to 1.2
Voltage Tap Serial Numbers				Total Q
Connect	Fermi	CERN	KEK	
H_{POT}	VTa1Q3	EE1113	a1	1.2
L_{POT}	VTc1Q3	EE1213	c1	
H_{POT}	VTc1Q3	EE1213	c1	1.2
L_{POT}	VTb1Q3	EE1313	b1	

				Nominal 1.0 to 1.2
				Total Inductance
H_{POT}	VTa1Q3	EE1113	a1	IR OF ~~1.7~~ 1.2
L_{POT}	VTb1Q3	EE1313	b1	

Inez Ramos / O. Fuentes
Technician(s)

7/6/05
Date

To measure the resistance of a Thermometer (RTD):

1. Use Hewlett Packard HP3457A digital multimeter.
2. Record temperature of building within +/- 5 degrees.
3. Press line button to turn line on.
4. Connect wires as shown in Figure below.
   U+ (Black) to Sense HI
   I+ (Yellow) to Input HI
   U- (Red) to Sense LO
   I- (Green) to Input LO
5. Push blue button (function key) once.
6. Push OHMF button.
7. Verify arrow in readout is above the 4WΩ (meaning a 4 wire resistance measurement).
8. Read resistance in ohms and record in traveler.

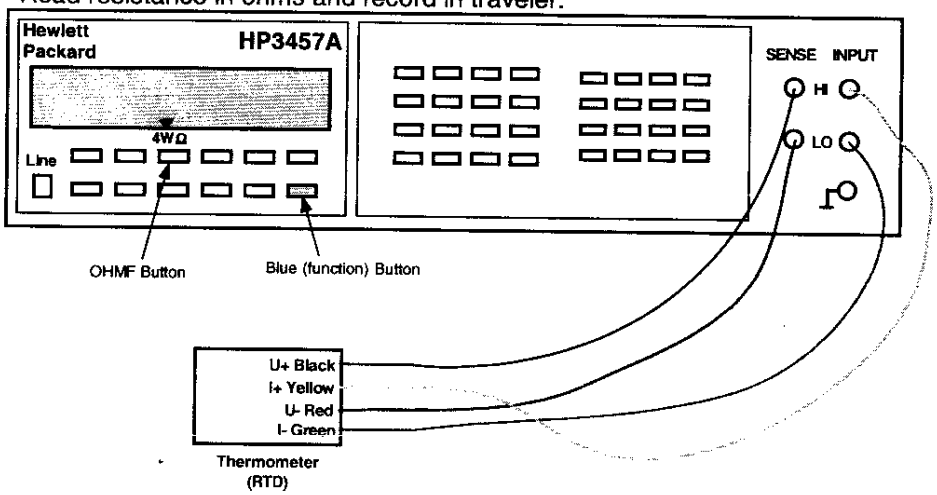

To measure the resistance of a Cryogenic (Warm-up) Heater

1. Use Hewlett Packard HP3457A digital multimeter.
2. Record temperature of building within +/- 5 degrees.
3. Press line button to turn line on.
4. Connect wires as shown in Figure below.
5. Push blue button (function key) once.
6. Push OHMF button.
7. Verify arrow in readout is above the 4WΩ (meaning a 4 wire resistance measurement).
   Note: Although this is technically a 4 wire measurement, it is effectively a 2 wire measurement, since there are only 2 wires connected to each heater.
8. Read resistance in ohms and record in traveler.

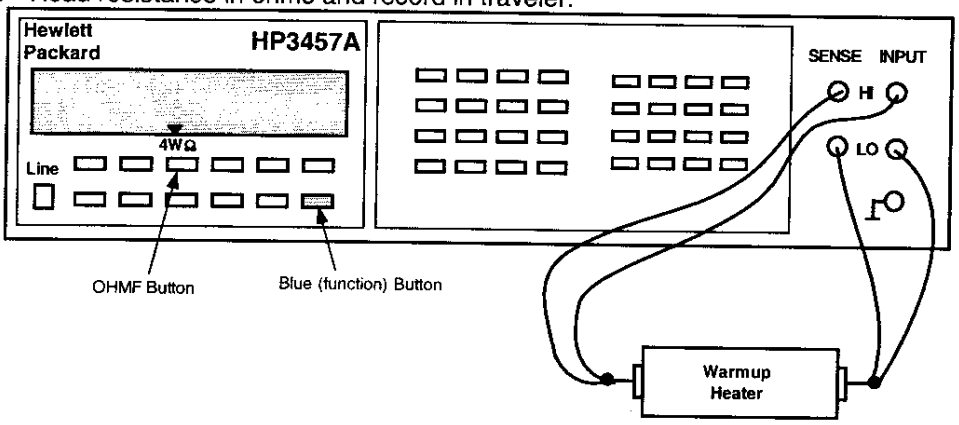

Q3 - RTD's and Cryogenic (warm-up) Heaters				
Temperature of Building (± 5°): _____				
Component	**Fermi**	**CERN**	**Range**	**Resistance**
Q3 RTD, primary	TaQ3	TT8313	**60 to 70 Ω**	64.25 Ω
Q3 RTD, redundant	TbQ3	TT8323	**60 to 70 Ω**	65.97 Ω
Q3 Cryogenic (warm-up) Heater (LE) - wire at top (CERN #1 I+)	W1aQ3	EH8313+	**16 to 18.5 Ω**	16.60 Ω
Q3 Cryogenic (warm-up) Heater (LE) - wire at bottom (CERN #1 I-)	W2aQ3	EH8313-		
Q3 Cryogenic (warm-up) Heater (Non-LE) - wire at top (CERN #2 I+)	W1bQ3	EH8323+	**16 to 18.5 Ω**	16.24 Ω
Q3 Cryogenic (warm-up) Heater (Non-LE) - wire at bottom (CERN #2 I-)	W2bQ3	EH8323-		

Technician(s) _____ Date 7/6/05

Using the Hewlett Packard HP3457A digital multimeter, measure the Protection (Strip) Heater Resistance for Q3.

Q3 Protection (Strip) Heater Resistance					
Fermi	**CERN**	**KEK**	**Description**	**Limit**	**Resistance**
H1aQ3	**YT1113+**	**HA1**	**Circuit A**	**28 to 32 Ω**	28.99 Ω
H2aQ3	**YT1113-**	**HA2**			
H1bQ3	**YT1123+**	**HB1**	**Circuit B**	**28 to 32 Ω**	29.10 Ω
H2bQ3	**YT1123-**	**HB2**			

Technician(s) _____ Date 7/6/05

16.2 Using the Valhalla 4300B, connect 10mA applied voltage thru the corrector Power Leads. Measure Resistance and record in the table below. Record Initial resistance of Corrector Element and record below.

Corrector Bus Leads

	V3A	V3B	H3A	H3B	B3A	B3B	B6A	B6B	
	V2A	V2B	H2A	H2B	B4A	B4B	A4A	A4B	
	V1A	V1B	H1A	H1B	A2A	A2B	A3A	A3B	

(View Looking from DFBX into Q3)

Corrector Assembly	Corrector Element	Readout Labels		Power Labels		Resistance	Initial Resistance
				I_{HI}	I_{LO}		
MQSX	MQSX	A2A	EE8223	A2A	A2B	.06	MQSX
		EE8223	A2B			7.63	
		A2A	A2B			7.69	
MCBXA	MCBXV	V3A	EE8113	V3A	V3B	.02	MCBXV
		EE8113	V3B			17.41	
		V3A	V3B			17.43	
	MCBXH	H3A	EE8123	H3A	H3B	IR ~~21.27~~ .01	MCBXH
		EE8123	H3B			21.35	
		H3A	H3B			21.36	
	MCTX	B6A	EE8613	B6A	B6B	.03	MCTX
		EE8613	B6B			99.20	
		B6A	B6B			99.22	
	MCSX	B3A	EE8313	B3A	B3B	.02	MCSX
		EE8313	B3B			27.90	
		B3A	B3B			27.90	
MCSOX	MCOSX	A4A	EE8423	A4A	A4B	.03	MCOSX
		EE8423	A4B			11.91	
		A4A	A4B			11.92	
	MCOX	B4A	EE8413	B4A	B4B	.01	MCOX
		EE8413	B4B			12.91	
		B4A	B4B			12.92	
	MCSSX	A3A	EE8323	A3A	A3B	.02	MCSSX
		EE8323	A3B			13.46	
		A3A	A3B			13.46	

O. Fucam / Bro Jones
Technician(s)

7 6 05
Date

Q3 LMQXC Cold Mass Module Assembly

LHC Serial No.: LMQXC04-0
Notes:

16.3 Attach Backing Splines as per Q3 Module Assembly (ME-369900).

Technician(s) Date 6-29-05

16.4 At the IP End (Lead End) wrap the Springboard Assemblies in Kapton and then wrap with Kevlar String (MA-369912) every ½ - ¾" over Kapton as per Q3 Module Assembly (ME-369900).

Technician(s) Date 6-29-05

16.5 At the Non-IP End (Non-Lead End) wrap the Springboard Assemblies in Kapton and then wrap with Kevlar String (MA-369912) every ½ - ¾" over Kapton as per Q3 Module Assembly (ME-369900).

Technician(s) Date 6-29-05

17.0 Beam Tube Insertion

17.1 Inspect the Beam Tube (MC-369522) for damage. Clean Beam Tube using lint free Heavy Duty Wipers (Fermi stock 1660-0150) and Isopropyl Alcohol (Fermi stock 1920-0300) as per Insulated Beam Tube Assembly for Q3 (MD-369838).

Technician(s) _____ Date 7-7-05

17.2 Using Insertion Tooling, insert the Beam Tube (MC-369522) into the Magnet Assembly as per Beam Tube Insertion Tooling (MD-369789).

Technician(s) _____ Date 7-7-05

17.4 Place a mark 45mm from the Kapton insulation on Non-IP End of the Beam Tube.

Technician(s) _____ Date 7/7/05

STOP

17.5 Verify that the placement of the mark in Step 17.4 is correct.

Crew Chief _____ Date 7-7-05

17.6 Using the Wachs Cutter, cut the Non-IP End of the Beam Tube at the mark.

Technician(s) _____ Date 7-7-05

17.7 Measure the inside Beam Tube length and record this measurement below.

Step	Description	Measurement
17.7.1	**Beam Tube Length**	8889
	Subtract 8650mm (±2mm)	**- 8650mm**
17.7.2	**(Length to be cut from IP End)**	= 239

Technician(s) _____ Date 7-7-05

17.8 Using the number recorded in Step 17.7.2, measure and place a mark at the IP End of the Beam Tube.

Technician(s) _____ Date 7-7-05

17.9 Verify that the placement of the mark in Step 17.8 is correct.

STOP

Crew Chief _____ Date 7-7-05

17.10 Using the Wachs Cutter, cut the IP End of the Beam Tube at the mark.

Technician(s) _____ Date 7-7-05

17.11 Measure and verify Beam Tube length is 8650 (±2mm). Record Actual Beam Tube Length below.

Actual Beam Tube Length	~~8650~~ 8649

Technician(s) _____ Date 7-7-05

STOP

Responsible Authority/Physicist _____ Date 7/7/05

17.12 Hipot the Beam Tube to coil, heaters and ground. (5kV) (Max. Leakage < 0.5μA)

STOP

Have Crew Chief verify setup and sign below before continuing.

Crew Chief _____ Date 7-7-05

Hipot	Leakage or Failure Voltage	Pass	Fail
Beam Tube to coil, heaters and ground	227nA	✓	

Technician(s) _____ Date 7/7/05

STOP

Responsible Authority/Physicist _____ Date 7-7-2005

18.0 Dome Installation

18.1 Tack weld the corrector mounting hardware in place as per Q3 Cold Mass Welded Assembly (ME-390529).

N/A

Weldor(s) _____ Date _____

18.2 Mount and adjust the Shipping restraint screws.

Note(s):

Weld to corrector if necessary.

N/A

Technician(s) _____ Date _____

18.3 Reposition the IP End Dome as shown in Q3 Cold Mass Welded Assembly (ME-390529) using the Horizontal Witness Line from step 11.4.

N/A

Technician(s) _____ Date _____

18.4 Tack weld the IP End Dome in place at approximately 6-8 places around the Dome per Q3 Cold Mass Welded Assembly (ME-390529).

N/A

Weldor(s) _____ Date _____

18.5 Ensure Spider Assembly (MB-430096) is installed properly as per Q3 Module Assembly (ME-369900).

N/A

Responsible Authority _____ Date _____

18.6 Weld the IP End Dome, skip weld around to minimize distortion per Q3 Cold Mass Welded Assembly (ME-390529).

N/A

Weldor(s) _____ Date _____

18.7 Reposition the Non-IP End Extension Tube as shown in Q3 Cold Mass Welded Assembly (ME-390529) using the Horizontal Witness Line from step 11.10.

N/A
Technician(s) Date

18.8 Tack weld the Extension Tube (MD-390667) to the Cold Mass per (ME-390529).

N/A
Weldor(s) Date

18.9 Verify that the Expansion Loop has not been damaged and is functioning properly.

Technician(s) 8-5-05
Date

18.10 Reposition the Non-IP End Extension Tube while feeding the Electrical wires/Bus through the proper ports as the Non-IP End Extension Tube is brought into position against the End Plate.

N/A
Technician(s) Date

18.11 Tack weld the Non-IP End Dome in place at approximately 6-8 places around the Dome as per Q3 Cold Mass Welded Assembly (ME-390529).

Bart
Weldor(s) 8/5/05
Date

18.12 Verify that the Spider Assembly (MB-430096) has not been damaged and is functioning properly.

Technician(s) 8-5-05
Date

18.13 Weld the Extension Tube (MD-390667) to the Cold Mass per (ME-390529).

N/A
Weldor(s) Date

18.14 Weld the Non-IP End Dome, skip weld around to minimize distortion as per Q3 Cold Mass Welded Assembly (ME-390529).

Bart
Weldor(s) 8/5/05
Date

18.0 Dome Installation

4th 18.1 Tack weld the corrector mounting hardware in place as per Q3 Cold Mass Welded Assembly (ME-390529).

Weldor(s) _____ Date 7-20-05

~~5th~~ 6th 18.2 Mount and adjust the Shipping restraint screws.

Note(s):
Weld to corrector if necessary.

Technician(s) _____ Date 7-20-05

1st → 18.3 Reposition the IP End Dome as shown in Q3 Cold Mass Welded Assembly (ME-390529) using the Horizontal Witness Line from step 11.4.

Technician(s) _____ Date 7-20-05

~~6th~~ ~~7th~~ 8th 18.4 Tack weld the IP End Dome in place at approximately 6-8 places around the Dome per Q3 Cold Mass Welded Assembly (ME-390529).

Weldor(s) _____ Date 7-20-05

2ND 18.5 Ensure Spider Assembly (MB-430096) is installed properly as per Q3 Module Assembly (ME-369900).

Responsible Authority _____ Date 7-20-05

~~7th~~ ~~8th~~ 9th 18.6 Weld the IP End Dome, skip weld around to minimize distortion per Q3 Cold Mass Welded Assembly (ME-390529).

Weldor(s) _____ Date 7-20-05

3rd REMOVE IP END DOME

5th PUTTY / STYCAST ALL BOLTS + NUTS & THAT REMAIN UNWELDED

7th REINSTALL IP END DOME

1st 18.7 Reposition the Non-IP End Extension Tube as shown in Q3 Cold Mass Welded Assembly (ME-390529) using the Horizontal Witness Line from step 11.10.

Technician(s) _____ Date 7-20-05

2nd 18.8 Tack weld the Extension Tube (MD-390667) to the Cold Mass per (ME-390529).

Weldor(s) _____ Date 7-20-05

3rd 18.9 Verify that the Expansion Loop has not been damaged and is functioning properly.

Technician(s) _____ Date 7-20-05

4th 18.10 Reposition the Non-IP End ~~Extension Tube while feeding the Electrical wires/Bus through the proper ports as the Non-IP End Extension Tube is brought into position against the End Plate.~~ DOME

Technician(s) _____ Date 7-20-05

6th 18.11 Tack weld the Non-IP End Dome in place at approximately 6-8 places around the Dome as per Q3 Cold Mass Welded Assembly (ME-390529).

Weldor(s) _____ Date 7-20-05

5th 18.12 Verify that the Spider Assembly (MB-430096) has not been damaged and is functioning properly.

~~Technician(s)~~ RESPONSIBLE _____ Date 7-20-05

7th 18.13 Weld the Extension Tube (MD-390667) to the Cold Mass per (ME-390529).

Weldor(s) _____ Date 7-20-05

8th 18.14 Weld the Non-IP End Dome, skip weld around to minimize distortion as per Q3 Cold Mass Welded Assembly (ME-390529).

Weldor(s) _____ Date 8-4-05

19.0 Suspension System Assembly

19.1 Clean the Suspension System with Ethyl Alcohol (Fermi stock 1920-0550) and Kimwipes (Fermi stock 1660-2500) or equivalent.

Part Name	Part Number	Quantity	Completed
Fixed Support Assembly	**(ME-390041)**	**1**	✓
Sliding Support Assembly	**(ME-390042)**	**1**	✓
Tie Bar Assembly	**(ME-390400)**	**2**	✓
Tie Bar Shim, 6.4mm (.250")	**(ME-390118)**	**4**	✓
Tie Bar Shim, 2.4mm (.093")	**(ME-390119)**	**4**	✓
Tie Bar Shim, 0.8mm (.031")	**(ME-390120)**	**4**	✓
Suspension System Adjusting Screw	**(MB-390039)**	**8**	✓
M16 x 70mm SHCS	**(MA-393021)**	**8**	✓
Washer (.656" ID x 1.38" OD x .13" THK STN STEEL)	**(MA-390377)**	**8**	✓

Label the IP End and the Non-IP End of the Vacuum Vessel with a temporary sticker or equivalent.

Technician(s) _____ Date 7-26-05

19.2 Insert the Fixed Support Assembly (ME-390041) into the Vacuum Vessel and position at the IP End.

Technician(s) _____ Date 7-26-05

19.3 Install the Suspension System Adjusting Screws (MB-390039) and Washer (MA-390377) into the Vacuum Vessel to hold the Fixed Support Assembly in place. Coat all screw threads with Molybdenum Disulfide prior to installation.

[redacted]

Technician(s) _____ Date 7-26-05

19.4 Adjust the Vertical and rotational alignment of the Supports using the Suspension System Adjusting Screws (MB-390039). Ensure all four screws are in contact with the Support and that Diametrically Opposing Support Lugs are equidistant from the Vacuum Vessel Wall.

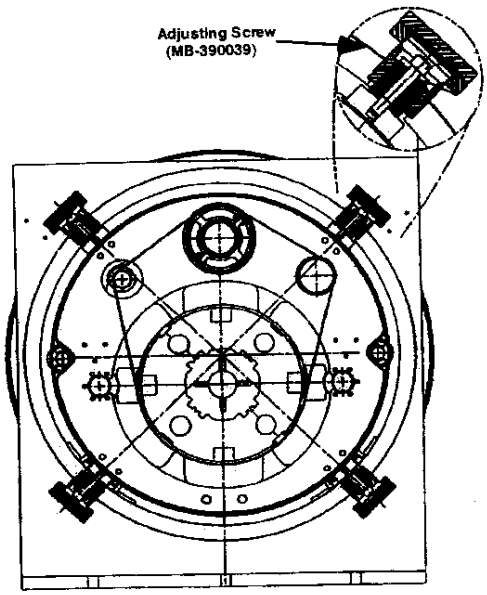

Technician(s) _____ Date 7-26-05

19.5 Insert the Sliding Support Assembly (ME-390042) in to the Vacuum Vessel and position at the Non-IP End.

Technician(s) _____ Date 7-26-05

19.6 Install the Suspension System Adjusting Screws (MB-390039) and Washer (MA-390377) into the Vacuum Vessel to hold the Fixed Support Assembly in place. Coat all screw threads with Molybdenum disulfide prior to installation.

Technician(s) _____ Date 7.26.05

19.7 Adjust the Vertical and rotational alignment of the Supports using the Suspension System Adjusting Screws (MB-390039). Ensure all four screws are in contact with the Support and that Diametrically Opposing Support Lugs are equidistant from the Vacuum Vessel Wall.

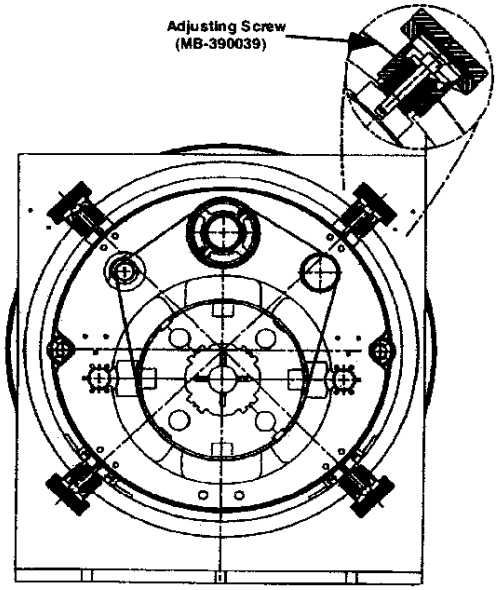

Technician(s) _____ Date 7-26-05

19.8 Assemble the Suspension System using the Fixed Support Assembly (ME-390041), the Sliding Support Assemblies (ME-390042) and the Tie Bar Assemblies (MC-390167). Insert Tie Bar Shims (MC-390118), (MB-390119) and (MB-390120) between the Sliding Support Assemblies (ME-390042) and the Tie Bar Assemblies (MC-390400) as required.
(Reference drawing: ME-390525).

Technician(s) _____ Date 7-26-05

19.9 Measure the distance between the Suspension Rings at the bottom of the Threaded Rods and record measurements below. Copy this page and place copy in designated book for later reference. (TR-333730, Q3 Cryostat Final Assembly, Step 5.1).

Non-IP North to IP North 4177 mm

Non-IP South to IP South 4178 mm

Technician(s) _____ Date 7/26/05

19.10 Measure from the face of the IP end vacuum vessel flange to the inside surface of the IP end suspension system.

Record measurement here: 2007 mm

Technician(s) _____ Date 7/27/05

19.11 Measure from the face of the Non-IP end vacuum vessel flange to the inside surface of the Non-IP end suspension system.

Record measurement here: 2010 mm

Technician(s) _____ Date 7/27/05

19.12 Label the IP End Support and the Non-IP End Support.
(Writing on the G-11 Support is acceptable).

Technician(s) _____ Date 7-27-05

19.13 Loosen each Suspension System Adjusting Screw (MB-390039) 1/2 turn and remove the Suspension System from the Vacuum Vessel.

Technician(s) _____ Date 7-27-05

19.14 Configure the Suspension Tooling for Q3 Assembly per Cryostat Layout Tooling & Assembly (ME-364604). Place Suspension Assembly on the tooling and make necessary adjustments to the tooling.

Technician(s) _____ Date 7-27-05

19.15 Assemble the Suspension Mounting Brackets (MD-390279) to the Support Assemblies.

Technician(s) _____ Date 7.27.05

19.16 Slide the Suspension System over the Cold Mass and place on tooling. The Suspension system may be disassembled during this step. Record shim sizes and locations prior to disassembly.

Note(s):

Ensure that the Suspension System is configured properly to the Cold Mass with respect to the IP and Non-IP Ends.

Technician(s) _____ Date 7.27.05

STOP

19.17 Verify locking collars exist only at IP End support.

Crew Chief _____ Date 7.27.05

19.18 Establish alignment between the Cold Mass and the Support system. Install shims between the Brass Slide Bars and the Stainless Steel Blocks on each support as needed.

Record Shim size and location below.

East-North 74 mil **East South** 74 mil

West-North 74 mil **West-South** 74 mil

Technician(s) _____ Date 7.27.05

STOP

19.19 Verify the Alignment of the Cold Mass and the Support System.

Crew Chief _____ Date 7-27-05

19.20 Weld the Cold Mass to the Outboard Cold Mass Brackets (MB-430082) as per Q3 Module Assembly (ME-390900).

Weldor(s) _____ Date 7-27-05

19.22 Add 112.5mm to the number recorded in Step 19.10 and record below.

Recorded measurement from Step 19.10: 2007

Add: + **112.5 mm**

Record New Total: 2119.5

Technician(s) 7-28-05 Date

19.23 Add 337.5mm to the number recorded in Step 19.11 and record below.

Recorded Measurement from Step 19.11: 2010

Add: + **337.5 mm**

Record New Total: 2347.5

Technician(s) 7-28-05 Date

19.24 Position the IP End of the Beam Tube at the distance recorded in Step 19.22 from the inside surface of the IP G-10 support.

Technician(s) 7-28-05 Date

19.25 Measure the Non-IP End of the Beam Tube from the inside surface of the Non-IP End support. Compare this number to the number recorded in Step 19.23.

Note(s):
These numbers should be the same to within 1 mm. If these numbers differ greater than 1 mm, contact Responsible Authority/Physicist.

Record measurement here: 2345.5

Recorded measurement from Step 19.23: 2347.5

Technician(s) 7-28-05 Date

19.26 Measure from the IP End of the Beam Tube to the Spot Face on the IP End Dome. Record below.

Record measurement here: 18 mm

Technician(s) 7-28-05 Date

19.27 Subtract 15mm from the number recorded in Step 19.26. This is the Spacer width for the IP End. Record below.

Recorded Measurement from Step 19.26: 18 mm

Subtract: **- 15mm**

Spacer width for the IP End: 3 mm

Technician(s) 7-28-05 Date

19.28 Measure from the Non-IP End of the Beam Tube to the Spot Face on the Non-IP End Dome. Record below.

Record measurement here: 23 mm

Technician(s) 7-28-05 Date

TAR

19.29 Subtract 15mm from the number recorded in Step ~~19.26~~ 19.28. This is the Spacer width for the Non-IP End. Record below.

Recorded Measurement from Step 19.28: 23 mm

Subtract: **- 15mm**

Spacer width for the Non-IP End: 8 mm

Technician(s) 7-28-05 Date

20.0 Cold Bore

20.1 Position the Beam Tube (MC-369522) longitudinally per Q3 Cold Mass Welded Assembly (ME-390529).

Technician(s) _____ Date 7/29/05

20.2 Flare both ends of the Beam Tube using Flaring Tool (MC-390416) per Q3 Cold Mass Welded Assembly (ME-390529).

Technician(s) _____ Date 7/29/05

20.3 Add Spacer between Beam Tube Flange and IP End Dome, if necessary.

Spacer Added? Yes ☐ No ☐

Technician(s) _____ Date 7/29/05

20.4 Position Beam Tube Flange (MC-390538) over the Beam Tube and onto IP End Dome per Q3 Cold Mass Welded Assembly (ME-390529).

Technician(s) _____ Date 7/29/05

20.5 Weld the Beam Tube to the Flange at IP End as per Q3 Cold Mass Welded Assembly (ME-390529).

Weldor(s) _____ Date 7/29/05

20.6 Position the Beam Tube Flange (MC-390538) over the Beam Tube and onto the Non-IP End Dome (Q3) per Q3 Cold Mass Welded Assembly (ME-390529).

Technician(s) _____ Date 7/29/05

20.7 Weld Beam Tube to Flange at Non-IP End as per Q3 Cold Mass Welded Assembly (ME-390529).

Weldor(s) _____ Date 7/29/05

20.8 Perform a stretched wire measurement of the system to align the Beam Tube Flange within ± .5 mm.

J. Dia

Responsible Authority/Physicist _____ Date 8/8/05

20.9 Align Beam Tube and the Flange at IP End per Q3 Cold Mass Welded Assembly (ME-390529).

Technician(s) _____ Date 8-12-05

20.10 Weld the Flange to the IP End Dome as per Q3 Cold Mass Welded Assembly (ME-390529).

Weldor(s) _____ Date 8/12/05

20.11 Align Beam Tube and Flange at NON-IP End per Q3 Cold Mass Welded Assembly (ME-390529).

Technician(s) _____ Date 8-12-05

20.12 Weld the Flange to the Non-IP End Dome as per Q3 Cold Mass Welded Assembly (ME-390529).

Weldor(s) _____ Date 8/12/05

21.0 Electrical Inspection

21.1 Perform an electrical inspection on each of the Individual Quadrants and the Cold Mass. Refer to the Valhalla and Leader Free Standing Coil Measurement Procedure (ES-292306).

To measure the Resistance of a Q3 Cold Mass:

1. Use Valhalla Scientific 4300B digital micro-ohmmeter.
2. Set Test Current to 0.1 amp.
3. Set Scale to 2V full scale.
4. Turn temperature compensation on.
5. Turn test current off.
6. Connect I_{HI} to "A" Lead as shown in figure 21.1-A.
7. Connect I_{LO} to "B" Lead as shown in figure 21.1-A.
8. Turn test current on.
9. Connect V_{HI} and V_{LO} to voltage taps as shown in resistance table.
10. To measure Total with leads, connect V_{HI} to "A" Lead and V_{LO} to "B" Lead.
11. At the IP End, jumper the 8Ka leads as shown in Figure 21.1-A.
12. Read resistance and record in traveler.

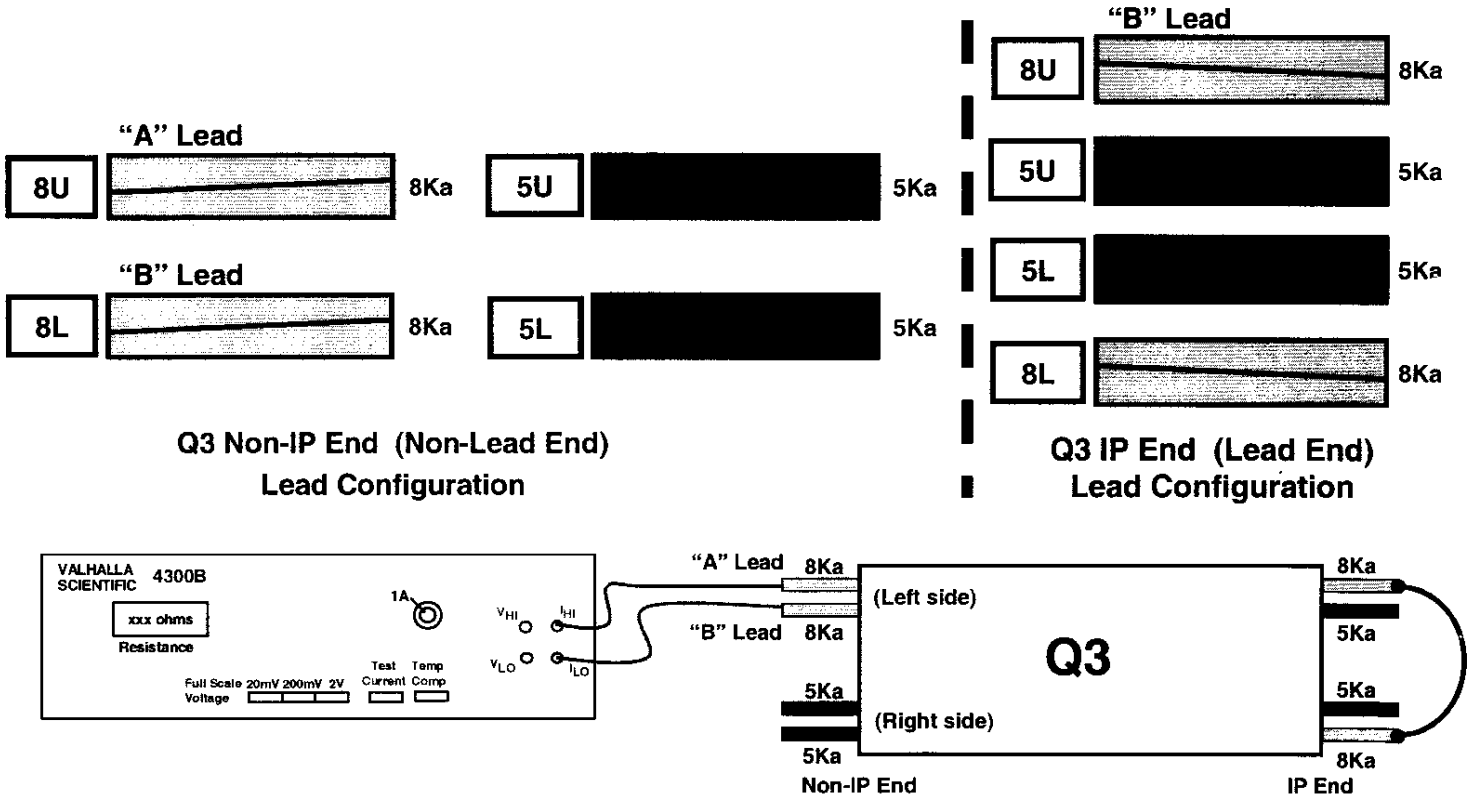

Figure 21.1-A

(Q3) Resistance				Nominal 3.35 to 3.45 Ω
Voltage Tap Serial Numbers				Total Resistance
Connect	Fermi	CERN	KEK	
V_{HI}	VTa1Q3	EE1113	a1	3.43 Ω
V_{LO}	VTc1Q3	EE1213	c1	
V_{HI}	VTc1Q3	EE1213	c1	3.43 Ω
V_{LO}	VTb1Q3	EE1313	b1	

				Total Resistance with Leads
				Nominal 6.75 to 6.85
V_{HI}	VTa1Q3	EE1113	a1	6.87 Ω
V_{LO}	VTb1Q3	EE1313	b1	
V_{HI}	Q4 Power Lead			6.90 Ω
V_{LO}	Q3 Power Lead			

D Murcyk
Technician(s)

7-30-05
Date

Check resistance of Redundant Voltage Taps.

Q3 Redundant Voltage Taps				Nominal 3.35 to 3.45 Ω
Connect	Fermi	CERN	KEK	Resistance
V_{HI}	VTa2Q3	EE1123	a2	3.43 Ω
V_{LO}	VTc2Q3	EE1223	c2	
V_{HI}	VTc2Q3	EE1223	c2	3.43 Ω
V_{LO}	VTb2Q3	EE1323	b2	

D Murcyk
Technician(s)

7-30-05
Date

To measure Ls and Q of a Q3 Cold Mass:

1. Use Agilent 4263B LCR Meter.
2. Turn power on by pushing line button. Wait 30 seconds until display screen is lit.
3. Recall program #1. To do this, push recall (Rcl), then push #1, then push Enter.
4. Push Auto/Hold button to release hold.
5. Verify that the frequency displayed in the upper right corner of the display screen is 1000 Hz and the level recorded in the lower right corner of the display screen is 1V or 1000 mV.
6. Connect H_{cur} to "A" power lead as shown in figure 21.1-B.
7. Connect L_{cur} to "B" power lead as shown in figure 21.1-B.
8. Connect H_{pot} and L_{pot} buttons to voltage taps as shown below.
9. Read Ls and Q from display and record in table.

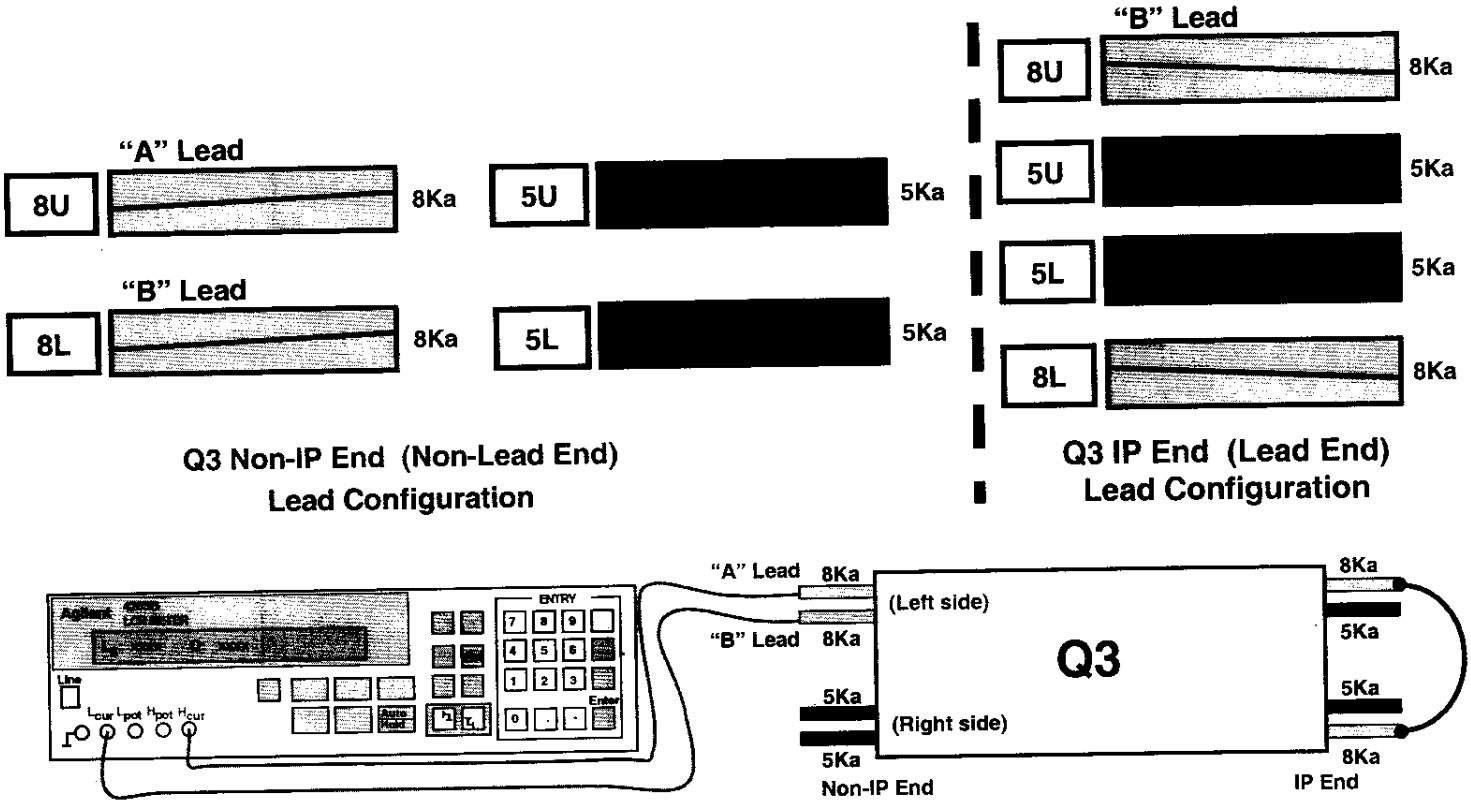

Figure 21.1-B

(Q3) Inductance				Nominal 15 to 16 mH
Voltage Tap Serial Numbers				Total Inductance
Connect	Fermi	CERN	KEK	
H_{POT}	VTa1Q3	EE1113	a1	15.542 mH
L_{POT}	VTc1Q3	EE1213	c1	
H_{POT}	VTc1Q3	EE1213	c1	15.403 mH
L_{POT}	VTb1Q3	EE1313	b1	

				Nominal 30 to 32 mH
				Total Inductance
H_{POT}	VTa1Q3	EE1113	a1	30.940 mH
L_{POT}	VTb1Q3	EE1313	b1	

(Q3) Q-Factor				Nominal 1.0 to 1.2
Voltage Tap Serial Numbers				Total Q
Connect	Fermi	CERN	KEK	
H_{POT}	VTa1Q3	EE1113	a1	1.2
L_{POT}	VTc1Q3	EE1213	c1	
H_{POT}	VTc1Q3	EE1213	c1	1.1
L_{POT}	VTb1Q3	EE1313	b1	

				Nominal 1.0 to 1.2
				Total Q
H_{POT}	VTa1Q3	EE1113	a1	1.2
L_{POT}	VTb1Q3	EE1313	b1	

Technician(s)

7-30-05
Date

To measure the resistance of a Thermometer (RTD):

1. Use Hewlett Packard HP3457A digital multimeter.
2. Record temperature of building within +/- 5 degrees.
3. Press line button to turn line on.
4. Connect wires as shown in Figure below.
   U+ (Black) to Sense HI
   I+ (Yellow) to Input HI
   U- (Red) to Sense LO
   I- (Green) to Input LO
5. Push blue button (function key) once.
6. Push OHMF button.
7. Verify arrow in readout is above the 4WΩ (meaning a 4 wire resistance measurement).
8. Read resistance in ohms and record in traveler.

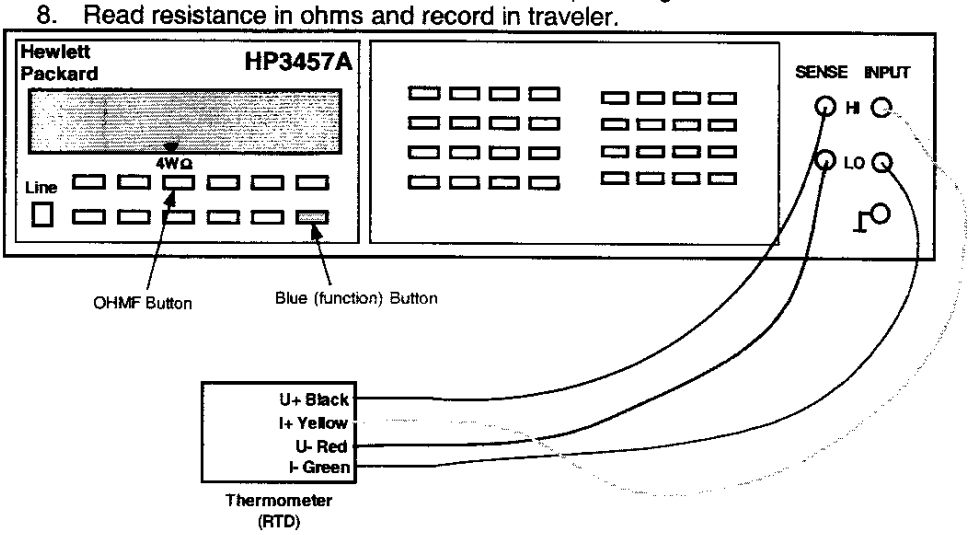

To measure the resistance of a Cryogenic (Warm-up) Heater

1. Use Hewlett Packard HP3457A digital multimeter.
2. Record temperature of building within +/- 5 degrees.
3. Press line button to turn line on.
4. Connect wires as shown in Figure below.
5. Push blue button (function key) once.
6. Push OHMF button.
7. Verify arrow in readout is above the 4WΩ (meaning a 4 wire resistance measurement).
   Note: Although this is technically a 4 wire measurement, it is effectively a 2 wire measurement, since there are only 2 wires connected to each heater.
8. Read resistance in ohms and record in traveler.

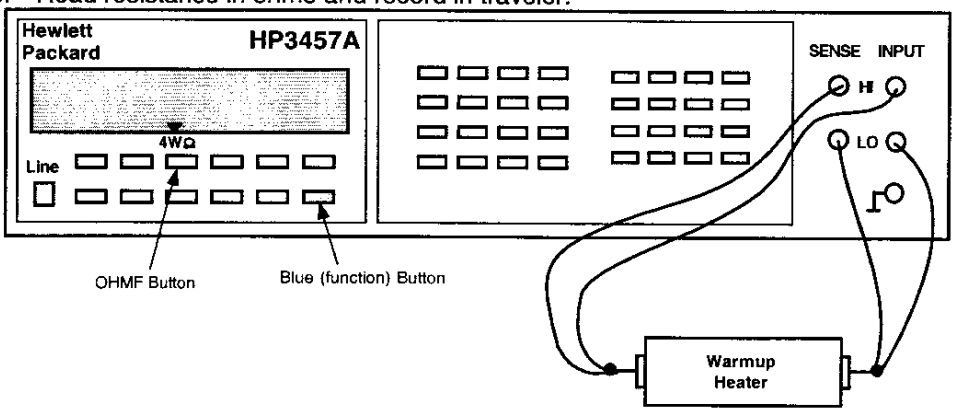

Q3 - RTD's and Cryogenic (warm-up) Heaters				
Temperature of Building (± 5°): _____				
Component	Fermi	CERN	Range	Resistance
Q3 RTD, primary	TaQ3	TT8313	60 to 70 Ω	64.17 Ω
Q3 RTD, redundant	TbQ3	TT8323	60 to 70 Ω	65.88 Ω
Q3 Cryogenic (warm-up) Heater (LE) - wire at top (CERN #1 I+)	W1aQ3	EH8313+	16 to 18.5 Ω	16.57 Ω
Q3 Cryogenic (warm-up) Heater (LE) - wire at bottom (CERN #1 I-)	W2aQ3	EH8313-		
Q3 Cryogenic (warm-up) Heater (Non-LE) - wire at top (CERN #2 I+)	W1bQ3	EH8323+	16 to 18.5 Ω	16.17 Ω
Q3 Cryogenic (warm-up) Heater (Non-LE) - wire at bottom (CERN #2 I-)	W2bQ3	EH8323-		

Technician(s) _____ Date 7-30-05

Using the Hewlett Packard HP3457A digital multimeter, measure the Protection (Strip) Heater Resistance for Q3.

Q3 Protection (Strip) Heater Resistance					
Fermi	CERN	KEK	Description	Limit	Resistance
H1aQ3	YT1113+	HA1	Circuit A	28 to 32 Ω	28.99 Ω
H2aQ3	YT1113-	HA2			
H1bQ3	YT1123+	HB1	Circuit B	28 to 32 Ω	29.07 Ω
H2bQ3	YT1123-	HB2			

Technician(s) _____ Date 7-30-05

21.2 Check Q1 & Q2 Instrumentation Bus Wires for Continuity.

Module	Pin	Fermi	CERN	KEK	Description	Done
M2	1	VTa1Q1	EE1111	a1	Q1 Lead Voltage Tap "a" , primary	✓
M2	2	VTa2Q1	EE1121	a2	Q1 Lead Voltage Tap "a", redundant	✓
M2	3	VTc1Q1	EE1211	c1	Q1 Center Voltage Tap "c", primary	✓
M2	4	VTc2Q1	EE1221	c2	Q1 Center Voltage Tap "c", redundant	✓
M2	5	VTb1Q1	EE1311	b1	Q1 Lead Voltage Tap "b", primary	✓
M3	1	VTc1Q2a	EE1212		Q2a Center Voltage Tap "c", primary	✓
M3	3	VTa2Q2a	EE1122		Q2a lead Voltage Tap "a", redundant	✓
M3	4	VTa1Q2a	EE1112		Q2a Lead Voltage Tap "a", primary	✓
M3	5	VTb2Q1	EE1321	b2	Q1 Lead Voltage Tap "b", redundant	✓
M4	1	VTc2Q2a	EE1222		Q2a Center Voltage Tap "c", redundant	✓
M4	3	VTb1Q2a	EE1312		Q2a Lead Voltage Tap "b", primary	✓
M4	4	VTb2Q2a	EE1322		Q2a Lead Voltage Tap "b", redundant	✓
M4	5	VTb1Q2b	EE1612		Q2b lead Voltage Tap "b", primary	✓
M5	2	VTc2Q2b	EE1522		Q2b Center Voltage Tap "c", redundant	✓
M5	3	VTc1Q2b	EE1512		Q2b Center Voltage Tap "c", primary	✓
M5	5	VTb2Q2b	EE1622		Q2b Lead Voltage Tap "b" redundant	✓
M6	1	VTa1Q2b	EE1412		Q2b Lead Voltage Tap "a", primary	✓
M6	2	VTa2Q2b	EE1422		Q2b Lead Voltage Tap "a", redundant	✓
M8	1	VTH1	EE8121		Corrector voltage tap Q1-H1 (skew dipole) (on MCBX, MCBXH, A+ lead)	✓
M8	2	VTV1	EE8111		Corrector voltage tap Q1-V1 (normal dipole) (on MCBX, MCBXV A+ lead)	✓
M8	3	VTH2	EE8122		Corrector voltage tap Q2-H2 (skew dipole) (on MCBX, MCBXH, A+ lead)	✓
M8	4	VTV2	EE8112		Corrector voltage tap Q2-V2 (normal dipole) (on MCBX, MCBXV, A+ lead)	✓
M10	1	W1aQ1	EH8311+		Q1 Cryogenic Heater lead end - wire at top (CERN #1 I+)	✓
M10	2	W2aQ1	EH8311-		Q1 Cryogenic Heater lead end - wire at bottom (CERN #1 I-)	✓
M10	3	W1bQ1	EH8321+		Q1 Cryogenic Heater non-lead end - wire at top (CERN #2 I+)	✓
M10	4	W2bQ1	EH8321-		Q1 Cryogenic Heater non-lead end - wire at bottom (CERN #2 I-)	✓
M11	1	W1aQ2A	EH8312+		Q2A Cryogenic Heater lead end - wire toward cold mass end plate (CERN #1 I+)	✓
M11	2	W2aQ2A	EH8312-		Q2A Cryogenic Heater lead end - wire toward cold mass mag center (CERN #1 I-)	✓
M11	3	W1bQ2A	EH8322+		Q2A Cryogenic Heater non-lead end- wire toward cold mass end plate (CERN #2 I+)	✓

Module	Pin	Fermi	CERN	KEK	Description	Done
M11	4	W2bQ2A	EH8322-		Q2A Cryogenic Heater non-lead end- wire toward cold mass mag center (CERN #2 I-)	✓
M12	1	W1aQ2B	EH8332+		Q2B Cryogenic Heater lead end - wire toward cold mass end plate (CERN #1 I+)	✓
M12	2	W2aQ2B	EH8332-		Q2B Cryogenic Heater lead end - wire toward cold mass mag center (CERN #1 I-)	✓
M12	3	W1bQ2B	EH8342+		Q2B Cryogenic Heater non-lead end- wire toward cold mass end plate (CERN #2 I+)	✓
M12	4	W2bQ2B	EH8342-		Q2B Cryogenic Heater non-lead end- wire toward cold mass mag center (CERN #2 I-)	✓
M14	1	H1aQ1	YT1111+	HA1	Q1 Protection (Strip) Heater, ("a" circuit) (CERN lead #1+)	✓
M14	3	H2aQ1	YT1111-	HA2	Q1Protection (Strip) Heater, ("a" circuit) (CERN lead #1-)	✓
M14	5	H1bQ1	YT1121+	HB1	Q1 Protection (Strip) Heater, ("b" circuit) (CERN lead #2+)	✓
M15	2	H1aQ2a	YT1112+		Q2a Protection (Strip) Heater, 1-4 & 2-3 circuit (FNAL lead A+) (CERN lead #1+)	✓
M15	4	H2bQ1	YT1121-	HB2	Q1 Protection (Strip) Heater, ("b" circuit) (CERN lead #2-)	✓
M16	1	H2aQ2a	YT1112-		Q2a Protection (Strip) Heater, 1-4 & 2-3 circuit (FNAL lead A-) (CERN lead #1-)	✓
M16	3	H1bQ2a	YT1122+		Q2a Protection (Strip) Heater, 1-2 & 3-4 circuit (FNAL lead B+) (CERN lead#2+)	✓
M16	5	H2bQ2a	YT1122-		Q2a Protection (Strip) Heater, 1-2 & 3-4 circuit (FNAL lead B-) (CERN lead #2-)	✓
M17	2	H2aQ2b	YT1132-		Q2b Protection (Strip) Heater, 1-4 & 2-3 circuit (FNAL lead A-) (CERN lead #1-)	✓
M17	4	H1aQ2b	YT1132+		Q2b Protection (Strip) Heater, 1-4 & 2-3 circuit (FNAL lead A+) (CERN lead #1+)	✓
M18	1	H1bQ2b	YT1142+		Q2b Protection (Strip) Heater, 1-2 & 3-4 circuit (FNAL lead B+) (CERN lead#2+)	✓
M18	3	H2bQ2b	YT1142-		Q2b Protection (Strip) Heater, 1-2 & 3-4 circuit (FNAL lead B-) (CERN lead #2-)	✓
M20	1	TaQ1_I+	TT8311 I+		Q1 RTD, primary Wire color: Yellow	✓
M20	2	TaQ1_I-	TT8311 I-		Q1 RTD, primary Wire color: Green	✓
M20	3	TaQ1_V+	TT8311 U+		Q1 RTD, primary Wire color: Black	✓
M20	4	TaQ1_V-	TT8311 U-		Q1 RTD, primary Wire color: Red	✓
M20	5	TbQ1_I+	TT8321 I+		Q1 RTD, redundant: Wire color: Yellow	✓
M20	6	TbQ1_I-	TT8321 I-		Q1 RTD, redundant: Wire color: Green	✓
M20	11	TbQ1_V+	TT8321 U+		Q1 RTD, redundant: Wire color: Black	✓
M20	10	TbQ1_V-	TT8321 U-		Q1 RTD, redundant: Wire color: Red	✓
M20	9	TaQ2a_I+	TT8312 I+		Q2a RTD, primary Wire color: Yellow	✓
M20	8	TaQ2a_I-	TT8312 I-		Q2a RTD, primary Wire color: Green	✓

Module	Pin	Fermi	CERN	KEK	Description	Done
M20	7	TaQ2a_V+	TT8312 U+		Q2a RTD, primary Wire color: Black	✓
M20	12	TaQ2a_V-	TT8312 U-		Q2a RTD, primary Wire color: Red	✓
M20	13	TbQ2a_I+	TT8322 I+		Q2a RTD, redundant: Wire color: Yellow	✓
M20	14	TbQ2a_I-	TT8322 I-		Q2a RTD, redundant: Wire color: Green	✓
M20	15	TbQ2a_V+	TT8322 U+		Q2a RTD, redundant: Wire color: Black	✓
M20	16	TbQ2a_V-	TT8322 U-		Q2a RTD, redundant: Wire color: Red	✓
M21	1	TaQ2b_I+	TT8332 I+		Q2b RTD, primary Wire color: Yellow	✓
M21	2	TaQ2b_I-	TT8332 I-		Q2b RTD, primary Wire color: Green	✓
M21	3	TaQ2b_V+	TT8332 U+		Q2b RTD, primary Wire color: Black	✓
M21	4	TaQ2b_V-	TT8332 U-		Q2b RTD, primary Wire color: Red	✓
M21	5	TbQ2b_I+	TT8342 I+		Q2b RTD, redundant: Wire color: Yellow	✓
M21	6	TbQ2b_I-	TT8342 I-		Q2b RTD, redundant: Wire color: Green	✓
M21	11	TbQ2b_V+	TT8342 U+		Q2b RTD, redundant: Wire color: Black	✓
M21	10	TbQ2b_V-	TT8342 U-		Q2b RTD, redundant: Wire color: Red	✓

Technician(s) — Date: 7-30-05

Responsible Authority/Physicist — Date: 1-AUG-2005

21.3 Using the Valhalla 4300B, connect 10mA applied voltage thru the corrector Power Leads. Measure Resistance and record in the table below. Record Initial resistance of Corrector Element and record below.

Corrector Bus Leads

	V3A	V3B	H3A	H3B	B3A	B3B	B6A	B6B	
	V2A	V2B	H2A	H2B	B4A	B4B	A4A	A4B	
	V1A	V1B	H1A	H1B	A2A	A2B	A3A	A3B	

(View Looking from DFBX into Q3)

Corrector Assembly	Corrector Element	Readout Labels		Power Labels I_{HI}	Power Labels I_{LO}	Resistance	Initial Resistance
MQSX	MQSX	A2A	EE8223	A2A	A2B	.06	MQSX
		EE8223	A2B			7.64	
		A2A	A2B			7.70	
MCBXA	MCBXV	V3A	EE8113	V3A	V3B	.02	MCBXV
		EE8113	V3B			17.43	
		V3A	V3B			17.45	
	MCBXH	H3A	EE8123	H3A	H3B	.01	MCBXH
		EE8123	H3B			21.40	
		H3A	H3B			21.42	
	MCTX	B6A	EE8613	B6A	B6B	.02	MCTX
		EE8613	B6B			99.47	
		B6A	B6B			99.50	
	MCSX	B3A	EE8313	B3A	B3B	.02	MCSX
		EE8313	B3B			27.94	
		B3A	B3B			27.96	
MCSOX	MCOSX	A4A	EE8423	A4A	A4B	.01	MCOSX
		EE8423	A4B			11.97	
		A4A	A4B			11.98	
	MCOX	B4A	EE8413	B4A	B4B	~~23.38~~ .01	MCOX
		EE8413	B4B			7.64	
		B4A	B4B			7.70	
	MCSSX	A3A	EE8323	A3A	A3B	~~13.52~~ .01	MCSSX
		EE8323	A3B			13.52	
		A3A	A3B			13.53	

Technician(s) _____ Date 8-1-05

Q3 LMQXC Cold Mass Module Assembly

LHC Serial No.: LMQXC04-0
Notes:

DR # 4278

21.4 Hipot the Cable Busses according to tables below. Hipots are done @ 3kV. Hold for 30 seconds.

Ramp Rate	Hi Potential (3000 V)	Grounded	Leakage
10 V/sec	8L	Everything else	82nA
10 V/sec	5L	Everything else	
10 V/sec	5U	Everything else	
3 V/sec. Coil - Ground Coil - Strip Htrs	8U	Everything else	
3 V/sec. Strip Htrs - Ground Strip Htrs - Coil	Strip Heaters	Everything else	

failure

Technician(s) _____ Date _____

5L - every

5U - every

Reinstall end dome

20.0 Cold Bore

20.1 Position the Beam Tube (MC-369522) longitudinally per Q3 Cold Mass Welded Assembly (ME-390529).

N/A
Technician(s) Date

20.2 Flare both ends of the Beam Tube using Flaring Tool (MC-390416) per Q3 Cold Mass Welded Assembly (ME-390529).

N/A
Technician(s) Date

20.3 Add Spacer between Beam Tube Flange and IP End Dome, if necessary.

Spacer Added? Yes ☐ No ☐

N/A
Technician(s) Date

20.4 Position Beam Tube Flange (MC-390538) over the Beam Tube and onto IP End Dome per Q3 Cold Mass Welded Assembly (ME-390529).

N/A
Technician(s) Date

20.5 Weld the Beam Tube to the Flange at IP End as per Q3 Cold Mass Welded Assembly (ME-390529).

N/A
Weldor(s) Date

20.6 Position the Beam Tube Flange (MC-390538) over the Beam Tube and onto the Non-IP End Dome (Q3) per Q3 Cold Mass Welded Assembly (ME-390529).

Technician(s) 8-5-05
Date

20.7 Weld Beam Tube to Flange at Non-IP End as per Q3 Cold Mass Welded Assembly (ME-390529).

Weldor(s) 8/5/05
Date

20.8 Perform a stretched wire measurement of the system to align the Beam Tube Flange within ± .5 mm.

N/A
Responsible Authority/Physicist Date

N/A

20.9 Align Beam Tube and the Flange at IP End per Q3 Cold Mass Welded Assembly (ME-390529).

_____ _____
Technician(s) Date

20.10 Weld the Flange to the IP End Dome as per Q3 Cold Mass Welded Assembly (ME-390529).

_____ _____
Weldor(s) Date

20.11 Align Beam Tube and Flange at NON-IP End per Q3 Cold Mass Welded Assembly (ME-390529).

_____ _____
Technician(s) Date

20.12 Weld the Flange to the Non-IP End Dome as per Q3 Cold Mass Welded Assembly (ME-390529).

_____ _____
Weldor(s) Date

21.0 Electrical Inspection

21.1 Perform an electrical inspection on each of the Individual Quadrants and the Cold Mass. Refer to the Valhalla and Leader Free Standing Coil Measurement Procedure (ES-292306).

To measure the Resistance of a Q3 Cold Mass:

1. Use Valhalla Scientific 4300B digital micro-ohmmeter.
2. Set Test Current to 0.1 amp.
3. Set Scale to 2V full scale.
4. Turn temperature compensation on.
5. Turn test current off.
6. Connect I_{HI} to "A" Lead as shown in figure 21.1-A.
7. Connect I_{LO} to "B" Lead as shown in figure 21.1-A.
8. Turn test current on.
9. Connect V_{HI} and V_{LO} to voltage taps as shown in resistance table.
10. To measure Total with leads, connect V_{HI} to "A" Lead and V_{LO} to "B" Lead.
11. At the IP End, jumper the 8Ka leads as shown in Figure 21.1-A.
12. Read resistance and record in traveler.

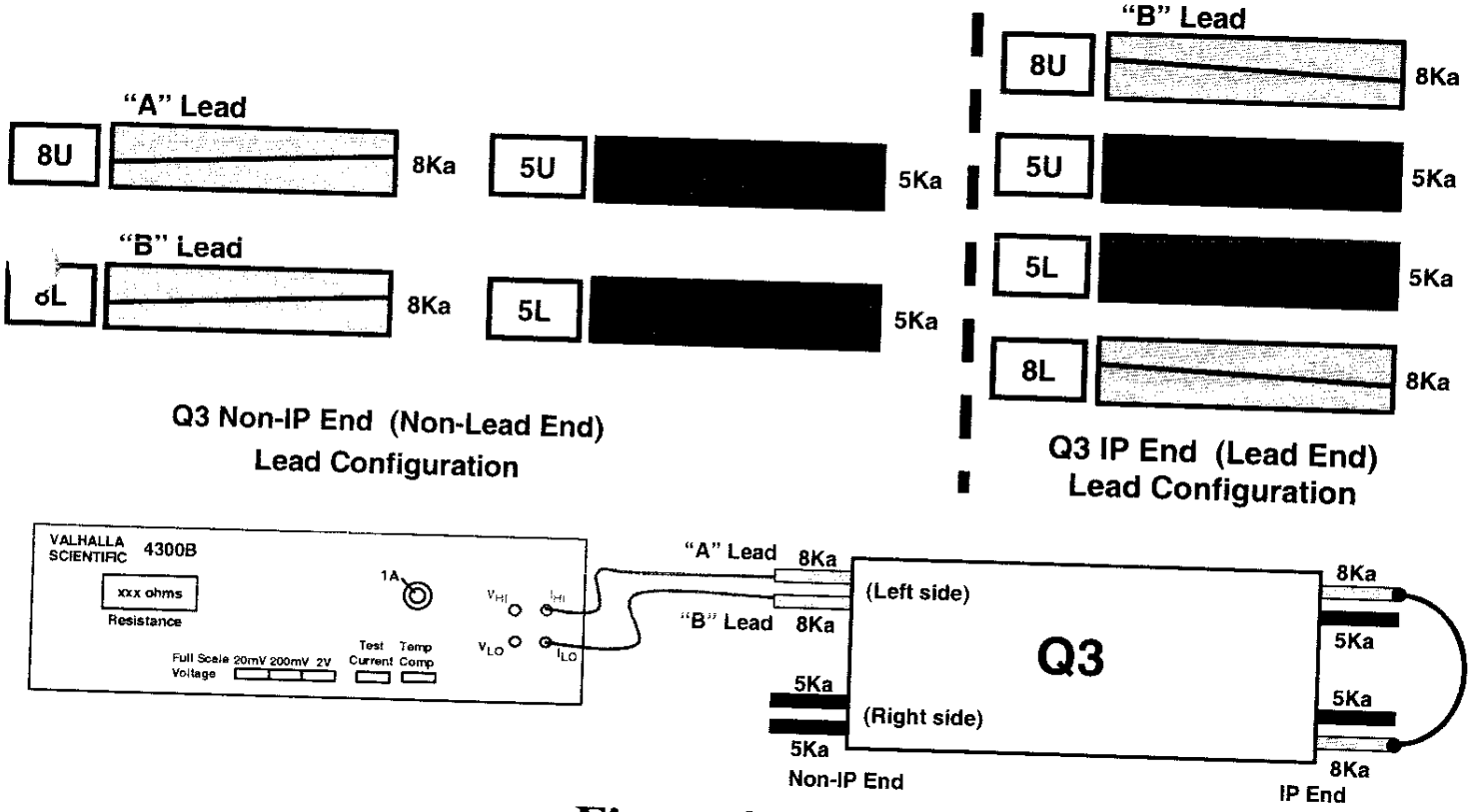

Figure 21.1-A

(Q3) Resistance				Nominal 3.35 to 3.45 Ω
Voltage Tap Serial Numbers				Total Resistance
Connect	Fermi	CERN	KEK	
V_{HI}	VTa1Q3	EE1113	a1	3.424 Ω
V_{LO}	VTc1Q3	EE1213	c1	
V_{HI}	VTc1Q3	EE1213	c1	3.428 Ω
V_{LO}	VTb1Q3	EE1313	b1	

				Total Resistance with Leads
				Nominal 6.75 to 6.85
V_{HI}	VTa1Q3	EE1113	a1	6.874 Ω
V_{LO}	VTb1Q3	EE1313	b1	
V_{HI}	Q4 Power Lead			6.873 Ω
V_{LO}	Q3 Power Lead			

Technician(s)

8-6-05
Date

Check resistance of Redundant Voltage Taps.

Q3 Redundant Voltage Taps				Nominal 3.35 to 3.45 Ω
Connect	Fermi	CERN	KEK	Resistance
V_{HI}	VTa2Q3	EE1123	a2	3.424 Ω
V_{LO}	VTc2Q3	EE1223	c2	
V_{HI}	VTc2Q3	EE1223	c2	3.424 Ω
V_{LO}	VTb2Q3	EE1323	b2	

Technician(s)

8-6-05
Date

To measure Ls and Q of a Q3 Cold Mass:

1. Use Agilent 4263B LCR Meter.
2. Turn power on by pushing line button. Wait 30 seconds until display screen is lit.
3. Recall program #1. To do this, push recall (Rcl), then push #1, then push Enter.
4. Push Auto/Hold button to release hold.
5. Verify that the frequency displayed in the upper right corner of the display screen is 1000 Hz and the level recorded in the lower right corner of the display screen is 1V or 1000 mV.
6. Connect H_{cur} to "A" power lead as shown in figure 21.1-B.
7. Connect L_{cur} to "B" power lead as shown in figure 21.1-B.
8. Connect H_{pot} and L_{pot} buttons to voltage taps as shown below.
9. Read Ls and Q from display and record in table.

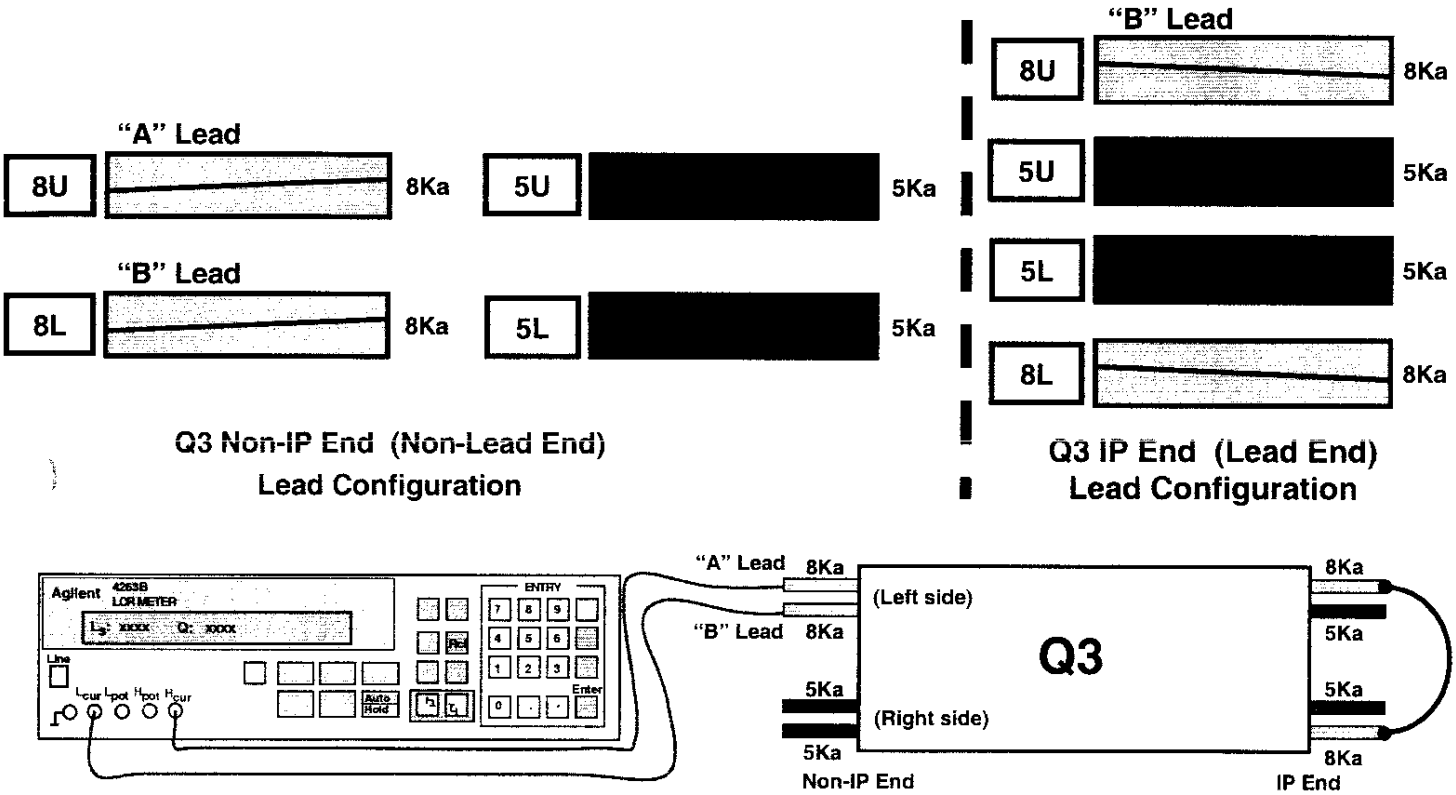

Figure 21.1-B

(Q3) Inductance				Nominal 15 to 16 mH
Voltage Tap Serial Numbers				Total Inductance
Connect	Fermi	CERN	KEK	
H_{POT}	VTa1Q3	EE1113	a1	15.231 mH
L_{POT}	VTc1Q3	EE1213	c1	
H_{POT}	VTc1Q3	EE1213	c1	15.181 mH
L_{POT}	VTb1Q3	EE1313	b1	

				Nominal 30 to 32 mH
				Total Inductance
H_{POT}	VTa1Q3	EE1113	a1	30.955 mH
L_{POT}	VTb1Q3	EE1313	b1	

(Q3) Q-Factor				Nominal 1.0 to 1.2
Voltage Tap Serial Numbers				Total Q
Connect	Fermi	CERN	KEK	
H_{POT}	VTa1Q3	EE1113	a1	1.2 ~~30.954~~ 1.5
L_{POT}	VTc1Q3	EE1213	c1	
H_{POT}	VTc1Q3	EE1213	c1	1.1
L_{POT}	VTb1Q3	EE1313	b1	

				Nominal 1.0 to 1.2
				Total Q
H_{POT}	VTa1Q3	EE1113	a1	1.1
L_{POT}	VTb1Q3	EE1313	b1	

Technician(s)

8-5-05
Date

To measure the resistance of a Thermometer (RTD):

1. Use Hewlett Packard HP3457A digital multimeter.
2. Record temperature of building within +/- 5 degrees.
3. Press line button to turn line on.
4. Connect wires as shown in Figure below.
   U+ (Black) to Sense HI
   I+ (Yellow) to Input HI
   U- (Red) to Sense LO
   I- (Green) to Input LO
5. Push blue button (function key) once.
6. Push OHMF button.
7. Verify arrow in readout is above the 4WΩ (meaning a 4 wire resistance measurement).
8. Read resistance in ohms and record in traveler.

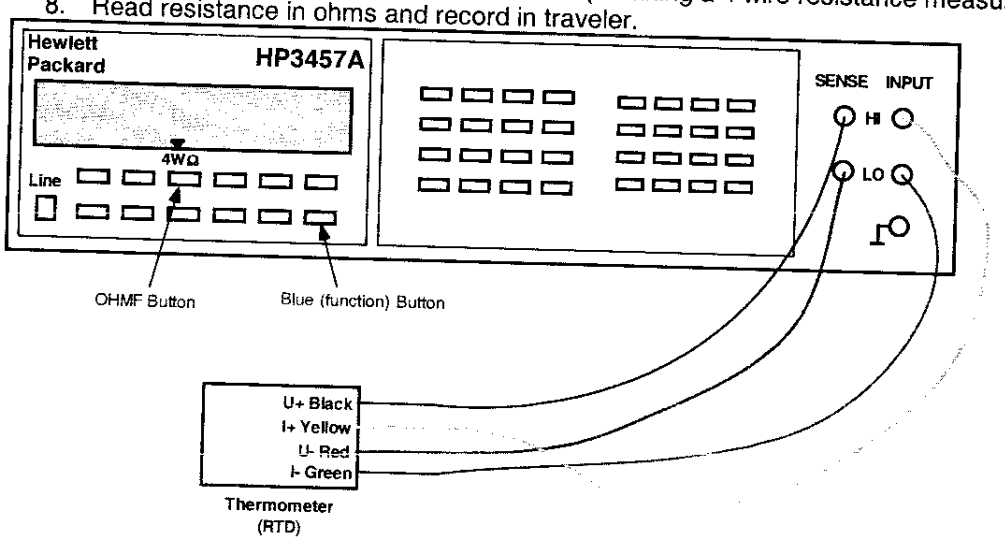

To measure the resistance of a Cryogenic (Warm-up) Heater

1. Use Hewlett Packard HP3457A digital multimeter.
2. Record temperature of building within +/- 5 degrees.
3. Press line button to turn line on.
4. Connect wires as shown in Figure below.
5. Push blue button (function key) once.
6. Push OHMF button.
7. Verify arrow in readout is above the 4WΩ (meaning a 4 wire resistance measurement).
   Note: Although this is technically a 4 wire measurement, it is effectively a 2 wire measurement, since there are only 2 wires connected to each heater.
8. Read resistance in ohms and record in traveler.

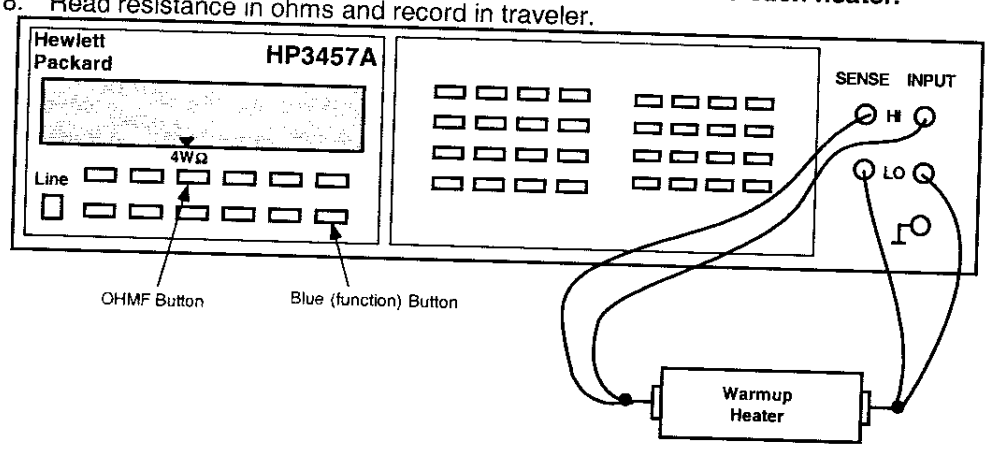

Q3 - RTD's and Cryogenic (warm-up) Heaters				
Temperature of Building (± 5°): _____				
Component	Fermi	CERN	Range	Resistance
Q3 RTD, primary	TaQ3	TT8313	60 to 70 Ω	64.17 Ω
Q3 RTD, redundant	TbQ3	TT8323	60 to 70 Ω	64.23 Ω
Q3 Cryogenic (warm-up) Heater (LE) - wire at top (CERN #1 I+)	W1aQ3	EH8313+	16 to 18.5 Ω	16.61 Ω
Q3 Cryogenic (warm-up) Heater (LE) - wire at bottom (CERN #1 I-)	W2aQ3	EH8313-		
Q3 Cryogenic (warm-up) Heater (Non-LE) - wire at top (CERN #2 I+)	W1bQ3	EH8323+	16 to 18.5 Ω	16.21 Ω
Q3 Cryogenic (warm-up) Heater (Non-LE) - wire at bottom (CERN #2 I-)	W2bQ3	EH8323-		

Technician(s) _____ Date 8-5-05

Using the Hewlett Packard HP3457A digital multimeter, measure the Protection (Strip) Heater Resistance for Q3.

Q3 Protection (Strip) Heater Resistance					
Fermi	CERN	KEK	Description	Limit	Resistance
H1aQ3	YT1113+	HA1	Circuit A	28 to 32 Ω	27.98 Ω
H2aQ3	YT1113-	HA2			
H1bQ3	YT1123+	HB1	Circuit B	28 to 32 Ω	28.15 Ω
H2bQ3	YT1123-	HB2			

Technician(s) _____ Date 8-5-05

21.2 Check Q1 & Q2 Instrumentation Bus Wires for Continuity.

Module	Pin	Fermi	CERN	KEK	Description	Done
M2	1	VTa1Q1	EE1111	a1	Q1 Lead Voltage Tap "a" , primary	✓
M2	2	VTa2Q1	EE1121	a2	Q1 Lead Voltage Tap "a", redundant	✓
M2	3	VTc1Q1	EE1211	c1	Q1 Center Voltage Tap "c", primary	✓
M2	4	VTc2Q1	EE1221	c2	Q1 Center Voltage Tap "c", redundant	✓
M2	5	VTb1Q1	EE1311	b1	Q1 Lead Voltage Tap "b", primary	✓
M3	1	VTc1Q2a	EE1212		Q2a Center Voltage Tap "c", primary	✓
M3	3	VTa2Q2a	EE1122		Q2a lead Voltage Tap "a", redundant	✓
M3	4	VTa1Q2a	EE1112		Q2a Lead Voltage Tap "a", primary	✓
M3	5	VTb2Q1	EE1321	b2	Q1 Lead Voltage Tap "b", redundant	✓
M4	1	VTc2Q2a	EE1222		Q2a Center Voltage Tap "c", redundant	✓
M4	3	VTb1Q2a	EE1312		Q2a Lead Voltage Tap "b", primary	✓
M4	4	VTb2Q2a	EE1322		Q2a Lead Voltage Tap "b", redundant	✓
M4	5	VTb1Q2b	EE1612		Q2b lead Voltage Tap "b", primary	✓
M5	2	VTc2Q2b	EE1522		Q2b Center Voltage Tap "c", redundant	✓
M5	3	VTc1Q2b	EE1512		Q2b Center Voltage Tap "c", primary	✓
M5	5	VTb2Q2b	EE1622		Q2b Lead Voltage Tap "b" redundant	✓
M6	1	VTa1Q2b	EE1412		Q2b Lead Voltage Tap "a", primary	✓
M6	2	VTa2Q2b	EE1422		Q2b Lead Voltage Tap "a", redundant	✓
M8	1	VTH1	EE8121		Corrector voltage tap Q1-H1 (skew dipole) (on MCBX, MCBXH, A+ lead)	✓
M8	2	VTV1	EE8111		Corrector voltage tap Q1-V1 (normal dipole) (on MCBX, MCBXV A+ lead)	✓
M8	3	VTH2	EE8122		Corrector voltage tap Q2-H2 (skew dipole) (on MCBX, MCBXH, A+ lead)	✓
M8	4	VTV2	EE8112		Corrector voltage tap Q2-V2 (normal dipole) (on MCBX, MCBXV, A+ lead)	✓
M10	1	W1aQ1	EH8311+		Q1 Cryogenic Heater lead end - wire at top (CERN #1 I+)	✓
M10	2	W2aQ1	EH8311-		Q1 Cryogenic Heater lead end - wire at bottom (CERN #1 I-)	✓
M10	3	W1bQ1	EH8321+		Q1 Cryogenic Heater non-lead end - wire at top (CERN #2 I+)	✓
M10	4	W2bQ1	EH8321-		Q1 Cryogenic Heater non-lead end - wire at bottom (CERN #2 I-)	✓
M11	1	W1aQ2A	EH8312+		Q2A Cryogenic Heater lead end - wire toward cold mass end plate (CERN #1 I+)	✓
M11	2	W2aQ2A	EH8312-		Q2A Cryogenic Heater lead end - wire toward cold mass mag center (CERN #1 I-)	✓
M11	3	W1bQ2A	EH8322+		Q2A Cryogenic Heater non-lead end- wire toward cold mass end plate (CERN #2 I+)	✓

Module	Pin	Fermi	CERN	KEK	Description	Done
M11	4	W2bQ2A	EH8322-		Q2A Cryogenic Heater non-lead end- wire toward cold mass mag center (CERN #2 I-)	✓
M12	1	W1aQ2B	EH8332+		Q2B Cryogenic Heater lead end - wire toward cold mass end plate (CERN #1 I+)	✓
M12	2	W2aQ2B	EH8332-		Q2B Cryogenic Heater lead end - wire toward cold mass mag center (CERN #1 I-)	✓
M12	3	W1bQ2B	EH8342+		Q2B Cryogenic Heater non-lead end- wire toward cold mass end plate (CERN #2 I+)	✓
M12	4	W2bQ2B	EH8342-		Q2B Cryogenic Heater non-lead end- wire toward cold mass mag center (CERN #2 I-)	✓
M14	1	H1aQ1	YT1111+	HA1	Q1 Protection (Strip) Heater, ("a" circuit) (CERN lead #1+)	✓
M14	3	H2aQ1	YT1111-	HA2	Q1Protection (Strip) Heater, ("a" circuit) (CERN lead #1-)	✓
M14	5	H1bQ1	YT1121+	HB1	Q1 Protection (Strip) Heater, ("b" circuit) (CERN lead #2+)	✓
M15	2	H1aQ2a	YT1112+		Q2a Protection (Strip) Heater, 1-4 & 2-3 circuit (FNAL lead A+) (CERN lead #1+)	✓
M15	4	H2bQ1	YT1121-	HB2	Q1 Protection (Strip) Heater, ("b" circuit) (CERN lead #2-)	✓
M16	1	H2aQ2a	YT1112-		Q2a Protection (Strip) Heater, 1-4 & 2-3 circuit (FNAL lead A-) (CERN lead #1-)	✓
M16	3	H1bQ2a	YT1122+		Q2a Protection (Strip) Heater, 1-2 & 3-4 circuit (FNAL lead B+) (CERN lead#2+)	✓
M16	5	H2bQ2a	YT1122-		Q2a Protection (Strip) Heater, 1-2 & 3-4 circuit (FNAL lead B-) (CERN lead #2-)	✓
M17	2	H2aQ2b	YT1132-		Q2b Protection (Strip) Heater, 1-4 & 2-3 circuit (FNAL lead A-) (CERN lead #1-)	✓
M17	4	H1aQ2b	YT1132+		Q2b Protection (Strip) Heater, 1-4 & 2-3 circuit (FNAL lead A+) (CERN lead #1+)	✓
M18	1	H1bQ2b	YT1142+		Q2b Protection (Strip) Heater, 1-2 & 3-4 circuit (FNAL lead B+) (CERN lead#2+)	✓
M18	3	H2bQ2b	YT1142-		Q2b Protection (Strip) Heater, 1-2 & 3-4 circuit (FNAL lead B-) (CERN lead #2-)	✓
M20	1	TaQ1_I+	TT8311 I+		Q1 RTD, primary Wire color: Yellow	✓
M20	2	TaQ1_I-	TT8311 I-		Q1 RTD, primary Wire color: Green	✓
M20	3	TaQ1_V+	TT8311 U+		Q1 RTD, primary Wire color: Black	✓
M20	4	TaQ1_V-	TT8311 U-		Q1 RTD, primary Wire color: Red	✓
M20	5	TbQ1_I+	TT8321 I+		Q1 RTD, redundant: Wire color: Yellow	✓
M20	6	TbQ1_I-	TT8321 I-		Q1 RTD, redundant: Wire color: Green	✓
M20	11	TbQ1_V+	TT8321 U+		Q1 RTD, redundant: Wire color: Black	✓
M20	10	TbQ1_V-	TT8321 U-		Q1 RTD, redundant: Wire color: Red	✓
M20	9	TaQ2a_I+	TT8312 I+		Q2a RTD, primary Wire color: Yellow	✓
M20	8	TaQ2a_I-	TT8312 I-		Q2a RTD, primary Wire color: Green	✓

Module	Pin	Fermi	CERN	KEK	Description	Done
M20	7	TaQ2a_V+	TT8312 U+		Q2a RTD, primary Wire color: Black	✓
M20	12	TaQ2a_V-	TT8312 U-		Q2a RTD, primary Wire color: Red	✓
M20	13	TbQ2a_I+	TT8322 I+		Q2a RTD, redundant: Wire color: Yellow	✓
M20	14	TbQ2a_I-	TT8322 I-		Q2a RTD, redundant: Wire color: Green	✓
M20	15	TbQ2a_V+	TT8322 U+		Q2a RTD, redundant: Wire color: Black	✓
M20	16	TbQ2a_V-	TT8322 U-		Q2a RTD, redundant: Wire color: Red	✓
M21	1	TaQ2b_I+	TT8332 I+		Q2b RTD, primary Wire color: Yellow	✓
M21	2	TaQ2b_I-	TT8332 I-		Q2b RTD, primary Wire color: Green	✓
M21	3	TaQ2b_V+	TT8332 U+		Q2b RTD, primary Wire color: Black	✓
M21	4	TaQ2b_V-	TT8332 U-		Q2b RTD, primary Wire color: Red	✓
M21	5	TbQ2b_I+	TT8342 I+		Q2b RTD, redundant: Wire color: Yellow	✓
M21	6	TbQ2b_I-	TT8342 I-		Q2b RTD, redundant: Wire color: Green	✓
M21	11	TbQ2b_V+	TT8342 U+		Q2b RTD, redundant: Wire color: Black	✓
M21	10	TbQ2b_V-	TT8342 U-		Q2b RTD, redundant: Wire color: Red	✓

Technician(s) — Date: 8-8-05

Responsible Authority/Physicist — Date: 8-AUG-2005

21.3 Using the Valhalla 4300B, connect 10mA applied voltage thru the corrector Power Leads. Measure Resistance and record in the table below. Record Initial resistance of Corrector Element and record below.

Corrector Bus Leads

	V3A	V3B	H3A	H3B	B3A	B3B	B6A	B6B	
	V2A	V2B	H2A	H2B	B4A	B4B	A4A	A4B	
	V1A	V1B	H1A	H1B	A2A	A2B	A3A	A3B	

(View Looking from DFBX into Q3)

Corrector Assembly	Corrector Element	Readout Labels		Power Labels		Resistance	Initial Resistance
				I_{HI}	I_{LO}		
MQSX	MQSX	A2A	EE8223	A2A	A2B	.06	MQSX
		EE8223	A2B			7.61	
		A2A	A2B			7.67	
MCBXA	MCBXV	V3A	EE8113	V3A	V3B	.02	MCBXV
		EE8113	V3B			17.44	
		V3A	V3B			17.46	
	MCBXH	H3A	EE8123	H3A	H3B	.02	MCBXH
		EE8123	H3B			21.4	
		H3A	H3B			21.42	
	MCTX	B6A	EE8613	B6A	B6B	.02	MCTX
		EE8613	B6B			99.51	
		B6A	B6B			99.52	
	MCSX	B3A	EE8313	B3A	B3B	.01	MCSX
		EE8313	B3B			27.96	
		B3A	B3B			27.98	
MCSOX	MCOSX	A4A	EE8423	A4A	A4B	.02	MCOSX
		EE8423	A4B			11.96	
		A4A	A4B			11.97	
	MCOX	B4A	EE8413	B4A	B4B	.02	MCOX
		EE8413	B4B			7.65	
		B4A	B4B			7.68	
	MCSSX	A3A	EE8323	A3A	A3B	.01	MCSSX
		EE8323	A3B			13.44	
		A3A	A3B			13.47	

Technician(s) _____ Date 8-5-05

21.5 Hipot according to tables below.

Final Q3 Corrector and Bus Hipots

Looking into Non-IP End of Q3

Looking from DFBX to Q3

Gray – 500V

Others – 0V

Others – 0V

MCBXA		V3A	V3B	H3A	H3B	B3A	B3B	B6A	B6B	
Q2		V2A	V2B	H2A	H2B	B4A	B4B	A4A	A4B	
Q1		V1A	V1B	H1A	H1B	A2A	A2B	A3A	A3B	
						MQSX		MCSOX		

MCBXA
MCSOX

This shows the corrector bus in its final configuration as it enters the DFBX

Need to verify that there is no continuity between any of these paths

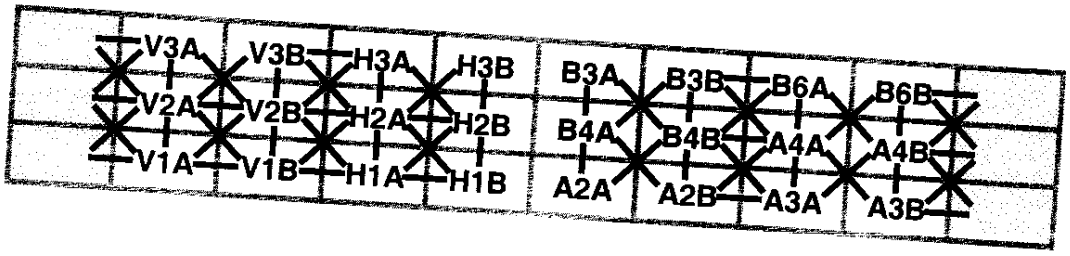

Measurement

Hipot #1
Gray – 500V
Others – 0V

	V3A	V3B	H3A	H3B	B3A	B3B	B6A	B6B	
					B4A	B4B	A4A	A4B	
	V1A	V1B	H1A	H1B	A2A	A2B	A3A	A3B	

.030 μA

Hipot #2
Gray – 500V
Others – 0V

	V3A	V3B	H3A	H3B	B3A	B3B	B6A	B6B	
	V2A	V2B	H2A	H2B	B4A	B4B	A4A	A4B	
	V1A	V1B	H1A	H1B	A2A	A2B	A3A	A3B	

.045 μA

Hipot #3
Gray – 500V
Others – 0V

	V3A	V3B	H3A	H3B	B3A	B3B	B6A	B6B	
	V2A	V2B	H2A	H2B	B4A	B4B	A4A	A4B	
	V1A	V1B	H1A	H1B	A2A	A2B	A3A	A3B	

.050 μA

Hipot #4
Gray – 500V
Others – 0V

	V3A	V3B	H3A	H3B	B3A	B3B	B6A	B6B	
	V2A	V2B	H2A	H2B	B4A	B4B	A4A	A4B	
	V1A	V1B	H1A	H1B	A2A	A2B	A3A	A3B	

.187 μA

Final Q3 Corrector and Bus Hipots

Looking into Non-IP End of Q3

Looking from DFBX to Q3

Measurement

Hipot #5
Gray – 500V
Others – 0V

	V3A	V3B	H3A	H3B	B3A	B3B	B6A	B6B
	V2A	V2B	H2A	H2B			A4A	A4B
	V1A	V1B	H1A	H1B	A2A	A2B	A3A	A3B

.032 µA

Hipot #6
Gray – 500V
Others – 0V

	V3A	V3B	H3A	H3B	B3A	B3B	B6A	B6B
	V2A	V2B	H2A	H2B	B4A	B4B		
	V1A	V1B	H1A	H1B	A2A	A2B	A3A	A3B

.037 µA

Hipot #7
Gray – 500V
Others – 0V

	V3A	V3B	H3A	H3B	B3A	B3B	B6A	B6B
	V2A	V2B	H2A	H2B	B4A	B4B	A4A	A4B
	V1A	V1B	H1A	H1B	A2A	A2B		

.052 µA

Technician(s)

8-3-05
Date

Physicist / Resp. Auth.

10-AUG-2005
DATE

TPR NEEDED

LHC Serial No.: LMQXC04-0
Notes:

22.0 Installation of Hypertronics

22.1 Assemble/Install Hypertronics Connectors, **without Cover** at **Non-IP End** as per Q3 Module Assembly (ME-369900). Pin Numbers for connectors are shown in Table 22.1 below.

Table 22.1

Module	Pin	Fermilab Label	CERN Label	KEK Label	Description
M1	1				Blank Module
M1	2				
M1	3				
M1	4				
M1	5				
M2	1	VTa1Q1	EE1111	a1	Q1 Lead Voltage Tap "a" , primary
M2	2	VTa2Q1	EE1121	a2	Q1 Lead Voltage Tap "a", redundant
M2	3	VTc1Q1	EE1211	c1	Q1 Center Voltage Tap "c", primary
M2	4	VTc2Q1	EE1221	c2	Q1 Center Voltage Tap "c", redundant
M2	5	VTb1Q1	EE1311	b1	Q1 Lead Voltage Tap "b", primary
M3	1	VTc2Q2a	EE1222		Q2a Center Voltage Tap "c" , redundant
M3	2	VTc1Q2a	EE1212		Q2a Center Voltage Tap "c" , primary
M3	3	VTa2Q2a	EE1122		Q2a Lead Voltage Tap "a", redundant
M3	4	VTa1Q2a	EE1112		Q2a Lead Voltage Tap "a", primary
M3	5	VTb2Q1	EE1321	b2	Q1 Lead Voltage Tap "b",redundant
M4	1	VTb1Q2a	EE1312		Q2a Lead Voltage Tap "b", primary
M4	2	VTb2Q2a	EE1322		Q2a Lead Voltage Tap "b", redundant
M4	3	VTb1Q2b	EE1612		Q2b Lead Voltage Tap "b", primary
M4	4	VTb2Q2b	EE1622		Q2b Lead Voltage Tap "b", redundant
M4	5	VTc1Q2b	EE1512		Q2b Center Voltage Tap "c" , primary
M5	1	VTa2Q3	EE1123	a2	Q3 Lead Voltage Tap "a", redundant
M5	2	VTa1Q3	EE1113	a1	Q3 Lead Voltage Tap "a", primary
M5	3	VTa2Q2b	EE1422		Q2b Lead Voltage Tap "a", redundant
M5	4	VTa1Q2b	EE1412		Q2b Lead Voltage Tap "a", primary
M5	5	VTc2Q2b	EE1522		Q2b Center Voltage Tap "c" , redundant
M6	1	VTc1Q3	EE1213	c1	Q3 Center Voltage Tap "c" , primary
M6	2	VTc2Q3	EE1223	c2	Q3 Center Voltage Tap "c" , redundant
M6	3	VTb1Q3	EE1313	b1	Q3 Lead Voltage Tap "b" , primary
M6	4	VTb2Q3	EE1323	b2	Q3 Lead Voltage Tap "b" , redundant
M6	5	Empty	Empty		No connection
M7	1				Blank Module
M7	2				
M7	3				
M7	4				
M7	5				

Table 22.1 (continued)

Module	Pin	Fermilab Label	CERN Label	KEK Label	Description
M8	1	VTH1	EE8121		Corrector voltage tap Q1-H1 (skew dipole) (on MCBX, MCBXH, A+ lead)
M8	2	VTV1	EE8111		Corrector voltage tap Q1-V1 (normal dipole) (on MCBX, MCBXV A+ lead)
M8	3	VTH2	EE8122		Corrector voltage tap Q2-H2 (skew dipole) (on MCBX, MCBXH, A+ lead)
M8	4	VTV2	EE8112		Corrector voltage tap Q2-V2 (normal dipole) (on MCBX, MCBXV, A+ lead)
M8	5	Empty	Empty		No connection
M9	1	VTH3	EE8123		Corrector voltage tap Q3-H3 (skew dipole) (on
M9	2	VTV3	EE8113		Corrector voltage tap Q3-V3 (normal dipole) (on
M9	3	VTA2	EE8223		Corrector voltage tap Q3-A2 (skew quadrupole) (on
M9	4	VTA3	EE8323		Corrector voltage tap Q3-A3 (skew sextupole) (on
M9	5	Empty	Empty		No Connection
M10	1	VTB3	EE8313		Corrector voltage tap Q3-B3 (normal sextupole)(on
M10	2	VTA4	EE8423		Corrector voltage tap Q3-A4 (skew octupole) (on
M10	3	VTB4	EE8413		Corrector voltage tap Q3-B4 (normal octupole) (on
M10	4	VTB6	EE8613		Corrector voltage tap Q3-B6 (normal dodecapole)
M10	5	Empty	Empty		No Connection
M11	1				Blank Module
M11	2				
M11	3				
M11	4				
M11	5				
M12	1	W1aQ1	EH8311+		Q1 Cryogenic Heater lead end - wire at top (CERN
M12	2	W2aQ1	EH8311-		Q1 Cryogenic Heater lead end - wire at bottom
M12	3	W1bQ1	EH8321+		Q1 Cryogenic Heater non-lead end - wire at top
M12	4	W2bQ1	EH8321-		Q1 Cryogenic Heater non-lead end - wire at bottom
M12	5	Empty	Empty		No Connection

Table 22.1 (continued)

Module	Pin	Fermilab Label	CERN Label	KEK Label	Description
M13	1	W1aQ2A	EH8312+		Q2A Cryogenic Heater lead end - wire toward cold mass end plate (CERN #1 I+)
M13	2	W2aQ2A	EH8312-		Q2A Cryogenic Heater lead end - wire toward cold mass mag center (CERN #1 I-)
M13	3	W1bQ2A	EH8322+		Q2A Cryogenic Heater non-lead end- wire toward cold mass end plate (CERN #2 I+)
M13	4	W2bQ2A	EH8322-		Q2A Cryogenic Heater non-lead end- wire toward cold mass mag center (CERN #2 I-)
M13	5	Empty	Empty		No connection
M14	1	W1aQ2B	EH8332+		Q2B Cryogenic Heater lead end - wire toward cold mass end plate (CERN #1 I+)
M14	2	W2aQ2B	EH8332-		Q2B Cryogenic Heater lead end - wire toward cold mass mag center (CERN #1 I-)
M14	3	W1bQ2B	EH8342+		Q2B Cryogenic Heater non-lead end- wire toward cold mass end plate (CERN #2 I+)
M14	4	W2bQ2B	EH8342-		Q2B Cryogenic Heater non-lead end- wire toward cold mass mag center (CERN #2 I-)
M14	5	Empty	Empty		No connection
M15	1	W1aQ3	EH8313+		Q3 Cryogenic Heater lead end - wire at top (CERN #1 I+)
M15	2	W2aQ3	EH8313-		Q3 Cryogenic Heater lead end - wire at bottom (CERN #1 I-)
M15	3	W1bQ3	EH8323+		Q3 Cryogenic Heater non-lead end - wire at top (CERN #2 I+)
M15	4	W2bQ3	EH8323-		Q3 Cryogenic Heater non-lead end - wire at bottom (CERN #2 I-)
M15	5	Empty	Empty		No Connection
M16	1				Blank Module
M16	2				
M16	3				
M16	4				
M16	5				
M17	1	H1aQ1	YT1111+	HA1	Q1 Protection (Strip) Heater, ("a" circuit) (CERN lead #1+)
M17	2	Empty	Empty		No connection
M17	3	H2aQ1	YT1111-	HA2	Q1 Protection (Strip) Heater, ("a" circuit) (CERN lead #1-)
M17	4	Empty	Empty		No connection
M17	5	H1bQ1	YT1121+	HB1	Q1 Protection (Strip) Heater, ("b" circuit) (CERN lead #2+)
M18	1	Empty	Empty		No connection
M18	2	H1aQ2a	YT1112+		Q2a Protection (Strip) Heater, 1-4 & 2-3 circuit (FNAL lead A+)
M18	3	Empty	Empty		No connection
M18	4	H2bQ1	YT1121-	HB2	Q1 Protection (Strip) Heater, ("b" circuit) (CERN lead #2-)
M18	5	Empty	Empty		No connection

Table 22.1 (continued)

Module	Pin	Fermilab Label	CERN Label	KEK Label	Description
M19	1	H2aQ2a	YT1112-		Q2a Protection (Strip) Heater, 1-4 & 2-3 circuit (FNAL lead A-) (CERN lead #1-)
M19	2	Empty	Empty		No connection
M19	3	H1bQ2a	YT1122+		Q2a Protection (Strip) Heater, 1-2 & 3-4 circuit (FNAL lead B+) (CERN lead#2+)
M19	4	Empty	Empty		No connection
M19	5	H2bQ2a	YT1122-		Q2a Protection (Strip) Heater, 1-2 & 3-4 circuit (FNAL lead B-) (CERN lead #2-)
M20	1	Empty	Empty		No connection
M20	2	H2aQ2b	YT1132-		Q2b Protection (Strip) Heater, 1-4 & 2-3 circuit (FNAL lead A-) (CERN lead #1-)
M20	3	Empty	Empty		No connection
M20	4	H1aQ2b	YT1132+		Q2b Protection (Strip) Heater, 1-4 & 2-3 circuit (FNAL lead A+) (CERN lead #1+)
M20	5	Empty	Empty		No connection
M21	1	H1bQ2b	YT1142+		Q2b Protection (Strip) Heater, 1-2 & 3-4 circuit (FNAL lead B+) (CERN lead#2+)
M21	2	Empty	Empty		No connection
M21	3	H2bQ2b	YT1142-		Q2b Protection (Strip) Heater, 1-2 & 3-4 circuit (FNAL lead B-) (CERN lead #2-)
M21	4	Empty	Empty		No Connection
M21	5	H1aQ3	YT1113+	HA1	Q3 Protection (Strip) Heater, ("a" circuit) (CERN lead #1+)
M22	1	Empty	Empty		No Connection
M22	2	H1bQ3	YT1123+	HB1	Q3 Protection (Strip) Heater, ("b" circuit) (CERN lead #2+)
M22	3	Empty	Empty		No Connection
M22	4	H2aQ3	YT1113-	HA2	Q3 Protection (Strip) Heater, ("a" circuit) (CERN lead #1-)
M22	5	Empty	Empty		No Connection
M23	1	H2bQ3	YT1123-	HB2	Q3 Protection (Strip) Heater, ("b" circuit) (CERN lead #2-)
M23	2	Empty	Empty		No Connection
M23	3	Empty	Empty		No Connection
M23	4	Empty	Empty		No Connection
M23	5	Empty	Empty		No Connection

Module	Pin	Fermilab Label	CERN Label	KEK Label	Description
M24	1				Blank Module
M24	2				
M24	3				
M24	4				
M24	5				
Note: Pin Numbers of Module M25 are not listed in numerical order.					
M25	1	TaQ1_I+	TT8311 I+		Q1 RTD, primary Wire color: Yellow
M25	2	TaQ1_I-	TT8311 I-		Q1 RTD, primary Wire color: Green
M25	3	TaQ1_V+	TT8311 U+		Q1 RTD, primary Wire color: Black
M25	4	TaQ1_V-	TT8311 U-		Q1 RTD, primary Wire color: Red
M25	5	TbQ1_I+	TT8321 I+		Q1 RTD, redundant: Wire color: Yellow
M25	6	TbQ1_I-	TT8321 I-		Q1 RTD, redundant: Wire color: Green
M25	11	TbQ1_V+	TT8321 U+		Q1 RTD, redundant: Wire color: Black
M25	10	TbQ1_V-	TT8321 U-		Q1 RTD, redundant: Wire color: Red
M25	9	TaQ2a_I+	TT8312 I+		Q2a RTD, primary Wire color: Yellow
M25	8	TaQ2a_I-	TT8312 I-		Q2a RTD, primary Wire color: Green
M25	7	TaQ2a_V+	TT8312 U+		Q2a RTD, primary Wire color: Black
M25	12	TaQ2a_V-	TT8312 U-		Q2a RTD, primary Wire color: Red
M25	13	TbQ2a_I+	TT8322 I+		Q2a RTD, redundant: Wire color: Yellow
M25	14	TbQ2a_I-	TT8322 I-		Q2a RTD, redundant: Wire color: Green
M25	15	TbQ2a_V+	TT8322 U+		Q2a RTD, redundant: Wire color: Black
M25	16	TbQ2a_V-	TT8322 U-		Q2a RTD, redundant: Wire color: Red
M25	17	Empty	Empty		No connection
Note: Pin Numbers of Module M26 are not listed in numerical order.					
M26	1	TaQ2b_I+	TT8332 I+		Q2b RTD, primary Wire color: Yellow
M26	2	TaQ2b_I-	TT8332 I-		Q2b RTD, primary Wire color: Green
M26	3	TaQ2b_V+	TT8332 U+		Q2b RTD, primary Wire color: Black
M26	4	TaQ2b_V-	TT8332 U-		Q2b RTD, primary Wire color: Red
M26	5	TbQ2b_I+	TT8342 I+		Q2b RTD, redundant: Wire color: Yellow
M26	6	TbQ2b_I-	TT8342 I-		Q2b RTD, redundant: Wire color: Green
M26	11	TbQ2b_V+	TT8342 U+		Q2b RTD, redundant: Wire color: Black
M26	10	TbQ2b_V-	TT8342 U-		Q2b RTD, redundant: Wire color: Red
M26	9	TaQ3_I+	TT8313 I+		Q3 RTD, primary Wire color: Yellow
M26	8	TaQ3_I-	TT8313 I-		Q3 RTD, primary Wire color: Green
M26	7	TaQ3_V+	TT8313 U+		Q3 RTD, primary Wire color: Black
M26	12	TaQ3_V-	TT8313 U-		Q3 RTD, primary Wire color: Red
M26	13	TbQ3_I+	TT8323 I+		Q3 RTD, redundant: Wire color: Yellow
M26	14	TbQ3_I-	TT8323 I-		Q3 RTD, redundant: Wire color: Green
M26	15	TbQ3_V+	TT8323 U+		Q3 RTD, redundant: Wire color: Black
M26	16	TbQ3_V-	TT8323 U-		Q3 RTD, redundant: Wire color: Red
M26	17	Empty	Empty		No connection

Hypertronics Connector Pin Locations (Q3 non-IP end)
VIEW: Male (pin) solder cup side

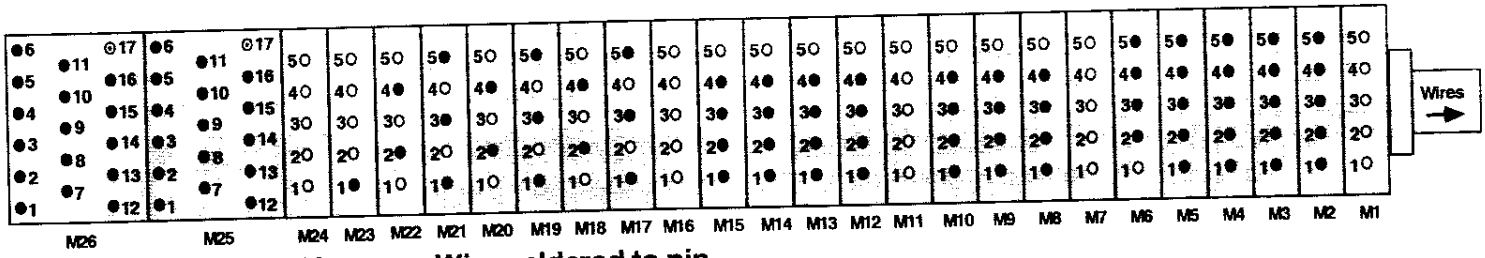

● Hole filled in grey: Wire soldered to pin.
⊙ Hole with dot in center: Pin exists but no wire soldered to it.
○ Hole filled in white: No pin. Hole is drilled out.

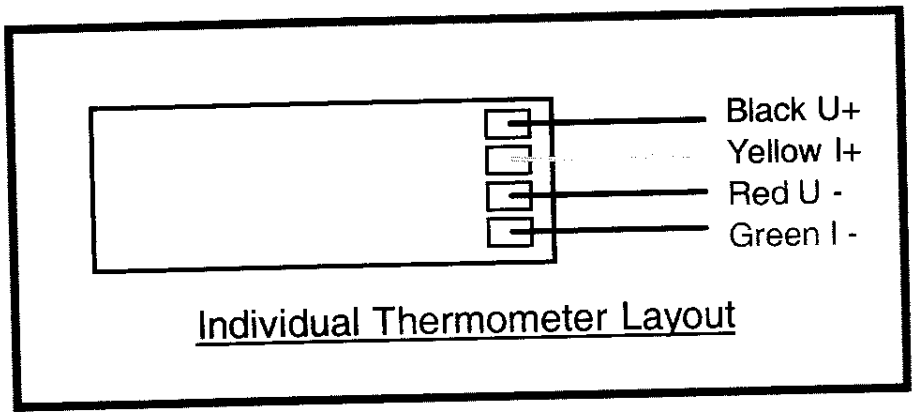

Note(s):

Ensure the Hypertronics cover has NOT been installed.

D. Watson
Technician(s)

8/10/2005
Date

22.2 Assemble/Install Hypertronics Connectors, **without Cover** at **IP End** as per Q3 Module Assembly (ME-369900). Pin Numbers for connectors are shown in Table 22.2 below.

Table 22.2

Module	Pin	Fermilab Label	CERN Label	KEK Label	Description
M1	1				Blank Module
M1	2				
M1	3				
M1	4				
M1	5				
M2	1	VTa1Q1	EE1111	a1	Q1 Lead Voltage Tap "a" , primary
M2	2	VTa2Q1	EE1121	a2	Q1 Lead Voltage Tap "a", redundant
M2	3	VTc1Q1	EE1211	c1	Q1 Center Voltage Tap "c", primary
M2	4	VTc2Q1	EE1221	c2	Q1 Center Voltage Tap "c", redundant
M2	5	VTb1Q1	EE1311	b1	Q1 Lead Voltage Tap "b", primary
M3	1	VTc1Q2a	EE1212		Q2a Center Voltage Tap "c", primary
M3	2	Empty	Empty		No connection
M3	3	VTa2Q2a	EE1122		Q2a lead Voltage Tap "a", redundant
M3	4	VTa1Q2a	EE1112		Q2a Lead Voltage Tap "a", primary
M3	5	VTb2Q1	EE1321	b2	Q1 Lead Voltage Tap "b", redundant
M4	1	VTc2Q2a	EE1222		Q2a Center Voltage Tap "c", redundant
M4	2	Empty	Empty		No connection
M4	3	VTb1Q2a	EE1312		Q2a Lead Voltage Tap "b", primary
M4	4	VTb2Q2a	EE1322		Q2a Lead Voltage Tap "b", redundant
M4	5	VTb1Q2b	EE1612		Q2b lead Voltage Tap "b", primary
M5	1	Empty	Empty		No connection
M5	2	VTc2Q2b	EE1522		Q2b Center Voltage Tap "c", redundant
M5	3	VTc1Q2b	EE1512		Q2b Center Voltage Tap "c", primary
M5	4	Empty	Empty		No connection
M5	5	VTb2Q2b	EE1622		Q2b Lead Voltage Tap "b" redundant
M6	1	VTa1Q2b	EE1412		Q2b Lead Voltage Tap "a", primary
M6	2	VTa2Q2b	EE1422		Q2b Lead Voltage Tap "a", redundant
M6	3	Empty	Empty		No connection
M6	4	Empty	Empty		No connection
M6	5	Empty	Empty		No connection
M7	1				Blank Module
M7	2				
M7	3				
M7	4				
M7	5				

Table 22.2 (continued)

Module	Pin	Fermilab Label	CERN Label	KEK Label	Description
M8	1	VTH1	EE8121		Corrector voltage tap Q1-H1 (skew dipole) (on MCBX, MCBXH, A+ lead)
M8	2	VTV1	EE8111		Corrector voltage tap Q1-V1 (normal dipole) (on MCBX, MCBXV A+ lead)
M8	3	VTH2	EE8122		Corrector voltage tap Q2-H2 (skew dipole) (on MCBX, MCBXH, A+ lead)
M8	4	VTV2	EE8112		Corrector voltage tap Q2-V2 (normal dipole) (on MCBX, MCBXV, A+ lead)
M8	5	Empty	Empty		No connection
M9	1				Blank Module
M9	2				
M9	3				
M9	4				
M9	5				
M10	1	W1aQ1	EH8311+		Q1 Cryogenic Heater lead end - wire at top (CERN #1 I+)
M10	2	W2aQ1	EH8311-		Q1 Cryogenic Heater lead end - wire at bottom (CERN #1 I-)
M10	3	W1bQ1	EH8321+		Q1 Cryogenic Heater non-lead end - wire at top (CERN #2 I+)
M10	4	W2bQ1	EH8321-		Q1 Cryogenic Heater non-lead end - wire at bottom (CERN #2 I-)
M10	5	Empty	Empty		No connection
M11	1	W1aQ2A	EH8312+		Q2A Cryogenic Heater lead end - wire toward cold mass end plate (CERN #1 I+)
M11	2	W2aQ2A	EH8312-		Q2A Cryogenic Heater lead end - wire toward cold mass mag center (CERN #1 I-)
M11	3	W1bQ2A	EH8322+		Q2A Cryogenic Heater non-lead end- wire toward cold mass end plate (CERN #2 I+)
M11	4	W2bQ2A	EH8322-		Q2A Cryogenic Heater non-lead end- wire toward cold mass mag center (CERN #2 I-)
M11	5	Empty	Empty		No connection
M12	1	W1aQ2B	EH8332+		Q2B Cryogenic Heater lead end - wire toward cold mass end plate (CERN #1 I+)
M12	2	W2aQ2B	EH8332-		Q2B Cryogenic Heater lead end - wire toward cold mass mag center (CERN #1 I-)
M12	3	W1bQ2B	EH8342+		Q2B Cryogenic Heater non-lead end- wire toward cold mass end plate (CERN #2 I+)
M12	4	W2bQ2B	EH8342-		Q2B Cryogenic Heater non-lead end- wire toward cold mass mag center (CERN #2 I-)
M12	5	Empty	Empty		No connection

Table 22.2 (continued)

Module	Pin	Fermilab Label	CERN Label	KEK Label	Description
M13	1				Blank Module
M13	2				
M13	3				
M13	4				
M13	5				
M14	1	H1aQ1	YT1111+	HA1	Q1 Protection (Strip) Heater, ("a" circuit) (CERN lead
M14	2	Empty	Empty		No connection
M14	3	H2aQ1	YT1111-	HA2	Q1Protection (Strip) Heater, ("a" circuit) (CERN lead #1-
M14	4	Empty	Empty		No connection
M14	5	H1bQ1	YT1121+	HB1	Q1 Protection (Strip) Heater, ("b" circuit) (CERN lead
M15	1	Empty	Empty		No connection
M15	2	H1aQ2a	YT1112+		Q2a Protection (Strip) Heater, 1-4 & 2-3 circuit (FNAL lead A+) (CERN lead #1+)
M15	3	Empty	Empty		No connection
M15	4	H2bQ1	YT1121-	HB2	Q1 Protection (Strip) Heater, ("b" circuit) (CERN lead
M15	5	Empty	Empty		No connection
M16	1	H2aQ2a	YT1112-		Q2a Protection (Strip) Heater, 1-4 & 2-3 circuit (FNAL lead A-) (CERN lead #1-)
M16	2	Empty	Empty		No connection
M16	3	H1bQ2a	YT1122+		Q2a Protection (Strip) Heater, 1-2 & 3-4 circuit (FNAL lead B+) (CERN lead#2+)
M16	4	Empty	Empty		No connection
M16	5	H2bQ2a	YT1122-		Q2a Protection (Strip) Heater, 1-2 & 3-4 circuit (FNAL lead B-) (CERN lead #2-)
M17	1	Empty	Empty		No connection
M17	2	H2aQ2b	YT1132-		Q2b Protection (Strip) Heater, 1-4 & 2-3 circuit (FNAL lead A-) (CERN lead #1-)
M17	3	Empty	Empty		No connection
M17	4	H1aQ2b	YT1132+		Q2b Protection (Strip) Heater, 1-4 & 2-3 circuit (FNAL lead A+) (CERN lead #1+)
M17	5	Empty	Empty		No connection
M18	1	H1bQ2b	YT1142+		Q2b Protection (Strip) Heater, 1-2 & 3-4 circuit (FNAL lead B+) (CERN lead#2+)
M18	2	Empty	Empty		No connection
M18	3	H2bQ2b	YT1142-		Q2b Protection (Strip) Heater, 1-2 & 3-4 circuit (FNAL lead B-) (CERN lead #2-)
M18	4	Empty	Empty		No connection
M18	5	Empty	Empty		No connection
M19	1				Blank Module
M19	2				
M19	3				
M19	4				
M19	5				

Table 22.2 (continued)

Module	Pin	Fermilab Label	CERN Label	KEK Label	Description
NOTE: PIN NUMBERS OF MODULE M20 ARE NOT LISTED IN NUMERICAL ORDER.					
M20	1	TaQ1_I+	TT8311 I+		Q1 RTD, primary Wire color: Yellow
M20	2	TaQ1_I-	TT8311 I-		Q1 RTD, primary Wire color: Green
M20	3	TaQ1_V+	TT8311 U+		Q1 RTD, primary Wire color: Black
M20	4	TaQ1_V-	TT8311 U-		Q1 RTD, primary Wire color: Red
M20	5	TbQ1_I+	TT8321 I+		Q1 RTD, redundant: Wire color: Yellow
M20	6	TbQ1_I-	TT8321 I-		Q1 RTD, redundant: Wire color: Green
M20	11	TbQ1_V+	TT8321 U+		Q1 RTD, redundant: Wire color: Black
M20	10	TbQ1_V-	TT8321 U-		Q1 RTD, redundant: Wire color: Red
M20	9	TaQ2a_I+	TT8312 I+		Q2a RTD, primary Wire color: Yellow
M20	8	TaQ2a_I-	TT8312 I-		Q2a RTD, primary Wire color: Green
M20	7	TaQ2a_V+	TT8312 U+		Q2a RTD, primary Wire color: Black
M20	12	TaQ2a_V-	TT8312 U-		Q2a RTD, primary Wire color: Red
M20	13	TbQ2a_I+	TT8322 I+		Q2a RTD, redundant: Wire color: Yellow
M20	14	TbQ2a_I-	TT8322 I-		Q2a RTD, redundant: Wire color: Green
M20	15	TbQ2a_V+	TT8322 U+		Q2a RTD, redundant: Wire color: Black
M20	16	TbQ2a_V-	TT8322 U-		Q2a RTD, redundant: Wire color: Red
M20	17	Empty	Empty		No connection
NOTE: PIN NUMBERS OF MODULE M21 ARE NOT LISTED IN NUMERICAL ORDER.					
M21	1	TaQ2b_I+	TT8332 I+		Q2b RTD, primary Wire color: Yellow
M21	2	TaQ2b_I-	TT8332 I-		Q2b RTD, primary Wire color: Green
M21	3	TaQ2b_V+	TT8332 U+		Q2b RTD, primary Wire color: Black
M21	4	TaQ2b_V-	TT8332 U-		Q2b RTD, primary Wire color: Red
M21	5	TbQ2b_I+	TT8342 I+		Q2b RTD, redundant: Wire color: Yellow
M21	6	TbQ2b_I-	TT8342 I-		Q2b RTD, redundant: Wire color: Green
M21	11	TbQ2b_V+	TT8342 U+		Q2b RTD, redundant: Wire color: Black
M21	10	TbQ2b_V-	TT8342 U-		Q2b RTD, redundant: Wire color: Red
M21	9	Empty	Empty		No connection
M21	8	Empty	Empty		No connection
M21	7	Empty	Empty		No connection
M21	12	Empty	Empty		No connection
M21	13	Empty	Empty		No connection
M21	14	Empty	Empty		No connection
M21	15	Empty	Empty		No connection
M21	16	Empty	Empty		No connection
M21	17	Empty	Empty		No connection

D. EDDY : D. WATSON 9/11/2005

FORM #1 FIXED VOLTAGE TAPS _1A_FORM

Test of Q3 FVTs

Apply 1 A current between BUS #1 & BUS #2 on the feed end (see diagram to right)
1. Clamp bus #1 to bus #2 on return end
2. Connect Current Source: BUS #1 to Positive and BUS #2 to Negative
Use a 3457 or equilivent DVM and record measurement to 4 decimal places
Use 2 wires Voltage Measurements Technique:
1. Connect DVM LO wire to BUS#2 (or Negative output of Power source)
2. HI wire of DVM will move through wires to measure V
DO NOT USE DC CURRENT LARGER THAN 2A.
DO NOT APPLY CURRENT THROUGH MAGNET LONGER THAN 30MIN.

BUS #1
BUS #2
BUS #3
BUS #4

POWER BUS LOCATION
RETURN END

BUS #1	BUS #2
BUS #3	BUS #4

POWER BUS LOCATION
FEED END

HYPERTRONIC CONNECTOR		FNAL Labels	Description	Wire Labels	Expected Voltage, V	Measured
Module	Pin					
M5	2	VTa1Q3	Q3 Lead Voltage Tap "a", primary	EE1113	7.0000	6.97
M5	1	VTa2Q3	Q3 Lead Voltage Tap "a", redundant	EE1123	7.0000	6.968
M6	3	VTb1Q3	Q3 lead Voltage Tap "b", primary	EE1313	0.0030	0.0214
M6	4	VTb2Q3	Q3 Lead Voltage Tap "b" redundant	EE1323	0.0030	0.0214
M6	1	VTc1Q3	Q3 Center Voltage Tap "c", primary	EE1213	3.5000	3.4943
M6	2	VTc2Q3	Q3 Center Voltage Tap "c", redundant	EE1223	3.5000	3.4943

Across BUS #1 and BUS #2	6.972

Form #2 CRYO HEATER CHECK_OUT

MEASURE RESISTANCE ACROSS EACH HEATER USING HANDHELD METER
MEASURE RESISTANCE FROM HEATER TO GND USING HANDHELD METER

Module	Pin		Expected Resistance, OHM	Measured Resistance, OHM	FNAL Label	Description
M15	1	EH8313+	17	18.31	W1aQ3	Q3 Cryogenic Heater lead end - wire toward cold mass end plate (CERN #1 I+)
M15	2	EH8313-			W2aQ3	Q3 Cryogenic Heater lead end - wire toward cold mass mag center (CERN #1 I-)
M15	3	EH8323+	17	17.73	W1bQ3	Q3 Cryogenic Heater non-lead end- wire toward cold mass end plate (CERN #2 I+)
M15	4	EH8323-			W2bQ3	Q3 Cryogenic Heater non-lead end- wire toward cold mass mag center (CERN #2 I-)

M15	1	EH8313+	more than 20MOHM	Inf	W1aQ3	Q3 Cryogenic Heater lead end - wire toward cold mass end plate (CERN #1 I+)
		GND				
M15	3	EH8323+	more than 20MOHM	Inf	W1bQ3	Q3 Cryogenic Heater non-lead end- wire toward cold mass end plate (CERN #2 I+)
		GND				

Form #3 PROTECTION STRIP HEATERS

MEASURE RESISTANCE ACROSS EACH HEATER USING HANDHELD METER
MEASURE RESISTANCE FROM HEATER TO GND USING HANDHELD METER
MEASURE RESISTANCE FROM HEATER TO COIL USING HANDHELD METER

M22	4	YT1113-	30	30.51	H2aQ1	Q1 Protection (Strip) Heater, 1-4 & 2-3 circuit (FNAL lead A-) (CERN lead #1-)
M21	5	YT1113+			H1aQ1	Q1 Protection (Strip) Heater, 1-4 & 2-3 circuit (FNAL lead A+) (CERN lead #1+)
M22	2	YT1123+	30	30.60	H1bQ3	Q3 Protection (Strip) Heater, 1-2 & 3-4 circuit (FNAL lead B+) (CERN lead#2+)
M23	1	YT1123-			H2bQ3	Q3 Protection (Strip) Heater, 1-2 & 3-4 circuit (FNAL lead B-) (CERN lead #2-)
M22	4	YT1113- GND	more than 20MOHM	INF	H2aQ3	Q3 Protection (Strip) Heater, 1-4 & 2-3 circuit (FNAL lead A-) (CERN lead #1-)
M22	2	YT1123+ GND	more than 20MOHM	INF	H1bQ3	Q3 Protection (Strip) Heater, 1-2 & 3-4 circuit (FNAL lead B+) (CERN lead#2+)
M22	4	YT1113- COIL	more than 20MOHM	INF	H2aQ3	Q3 Protection (Strip) Heater, 1-4 & 2-3 circuit (FNAL lead A-) (CERN lead #1-)
M22	2	YT1123+ COIL	more than 20MOHM	INF	H1bQ3	Q3 Protection (Strip) Heater, 1-2 & 3-4 circuit (FNAL lead B+) (CERN lead#2+)

Form#4 RTDs Measurements

MEASURE RESISTANCE ACROSS EACH RTD USING A FOUR WIRE METER
MEASURE RESISTANCE FROM RTD TO GROUND USING HANDHELD METER
MEASURE RESISTANCE FROM RTD TO THE COIL USING HANDHELD METER

Module	Pin	Breakout BOX Labels	Expected Resistance, OHM	Measured Resistance OHM	FNAL Label	Description
M26	9	TT8313 I+	57	64.04	TaQ3_I+	Q3 RTD, primary Wire color: Yellow
M26	8	TT8313 I-			TaQ3_I-	Q3 RTD, primary Wire color: Green
M26	7	TT8313 U+			TaQ3_V+	Q3 RTD, primary Wire color: Black
M26	12	TT8313 U-			TaQ3_V-	Q3 RTD, primary Wire color: Red
M26	13	TT8323 I+	57	65.73	TbQ3_I+	Q3 RTD, redundant: Wire color: Yellow
M26	14	TT8323 I-			TbQ3_I-	Q3 RTD, redundant: Wire color: Green
M26	15	TT8323 U+			TbQ3_V+	Q3 RTD, redundant: Wire color: Black
M26	16	TT8323 U-			TbQ3_V-	Q3 RTD, redundant: Wire color: Red
M26	9	TT8313 I+ GND	more than 20MOHM	INF	TaQ3_I+	Q3 RTD, primary Wire color: Yellow
M26	9	TT8323 I+ GND	more than 20MOHM	INF	TbQ3_I+	Q3 RTD, redundant: Wire color: Yellow
M26	9	TT8313 I+ COIL	more than 20MOHM	INF	TaQ3_I+	Q3 RTD, primary Wire color: Yellow
M26	9	TT8323 I+ COIL	more than 20MOHM	INF	TbQ3_I+	Q3 RTD, redundant: Wire color: Yellow

Form#6 Feed through Test

MEASURE RESISTANCE BETWEEN ALL 24-Q1 FEED THROUGH SIGNALS
MEASURE RESISTANCE BETWEEN ALL 46-Q2 FEED THROUGH SIGNALS

Q1			Q2		
	EXPECTED RESISTANCE	OK??		EXPECTED RESISTANCE	OK??
EE1111	< 1 OHM	YES	EE1112	< 1 OHM	YES
EE1121	< 1 OHM	YES	EE1122	< 1 OHM	YES
EE1211	< 1 OHM	YES	EE1212	< 1 OHM	YES
EE1221	< 1 OHM	YES	EE1222	< 1 OHM	YES
EE1311	< 1 OHM	YES	EE1312	< 1 OHM	YES
EE1321	< 1 OHM	YES	EE1322	< 1 OHM	YES
EE8121	< 1 OHM	YES	EE8122	< 1 OHM	YES
EE8111	< 1 OHM	YES	EE8112	< 1 OHM	YES
EH8311+	< 1 OHM	YES	EH8312+	< 1 OHM	YES
EH8311-	< 1 OHM	YES	EH8312-	< 1 OHM	YES
EH8321+	< 1 OHM	YES	EH8322+	< 1 OHM	YES
EH8321-	< 1 OHM	YES	EH8322-	< 1 OHM	YES
YT1111+	< 1 OHM	YES	YT1112+	< 1 OHM	YES
YT1111-	< 1 OHM	YES	YT1112-	< 1 OHM	YES
YT1121+	< 1 OHM	YES	YT1122+	< 1 OHM	YES
YT1121-	< 1 OHM	YES	YT1122-	< 1 OHM	YES
TT8311I+	< 1 OHM	YES	TT8312I+	< 1 OHM	YES
TT8311I-	< 1 OHM	YES	TT8312I-	< 1 OHM	YES
TT8311U+	< 1 OHM	YES	TT8312U+	< 1 OHM	YES
TT8311U-	< 1 OHM	YES	TT8312U-	< 1 OHM	YES
TT8321I+	< 1 OHM	YES	TT8322I+	< 1 OHM	YES
TT8321I-	< 1 OHM	YES	TT8322I-	< 1 OHM	YES
TT8321U+	< 1 OHM	YES	TT8322U+	< 1 OHM	YES
TT8321U-	< 1 OHM	YES	TT8322U-	< 1 OHM	YES
			EE1412	< 1 OHM	YES
			EE1422	< 1 OHM	YES
			EE1512	< 1 OHM	YES
			EE1522	< 1 OHM	YES
			EE1612	< 1 OHM	YES
			EE1622	< 1 OHM	YES
			EH8332+	< 1 OHM	YES
			EH8332-	< 1 OHM	YES
			EH8342+	< 1 OHM	YES
			EH8342-	< 1 OHM	YES
			YT1132+	< 1 OHM	YES
			YT1132-	< 1 OHM	YES
			YT1142+	< 1 OHM	YES
			YT1142-	< 1 OHM	YES
			TT8332I+	< 1 OHM	YES
			TT8332I-	< 1 OHM	YES
			TT8332U+	< 1 OHM	YES
			TT8332U-	< 1 OHM	YES
			TT8342I+	< 1 OHM	YES
			TT8342I-	< 1 OHM	YES
			TT8342U+	< 1 OHM	YES
			TT8342U-	< 1 OHM	YES

Ccoil bus #	NA	3	4	1	2	7	8	5	6	NA
	XXX	V3A	V3B	H3A	H3B	B3A	B3B	B6A	B6B	XXX
	XXX	V2A	V2B	H2A	H2B	B4A	B4B	A4A	A4B	XXX
	XXX	V1A	V1B	H1A	H1B	A2A	A2B	A3A	A3B	XXX

Form#5 Correction COILs for Q3 magnet

MEASURE RESISTANCE ACROSS BOTH CCOIL BUSES
MEASURE RESISTANCE FROM CCOIL TO GROUND
MEASURE RESISTANCE BETWEEN TAPS
MEASURE RESISTANCE FROM EACH TAP TO CCOIL BUS
MEASURE CONTINUITY OF Q1 CCOIL BUS
MEASURE FOR SHORT BETWEEN Q1 CCOIL BUS AND GRD
MEASURE CONTINUITY OF Q2 CCOIL BUS
MEASURE FOR SHORT BETWEEN Q2 CCOIL BUS AND GRD

Horizontal Corrector Coil		Expected	Measured
H3-A	CCOIL BUS #1	*23 OHMS*	21.9 OHMS
H3-B	CCOIL BUS #2		
Vertical Corrector Coil			
V3-A	CCOIL BUS #3	19 OHMS	17.9 OHMS
V3-B	CCOIL BUS #4		
A2 Corrector Coil			
A2-A	CCOIL BUS #7	10 OHMS	8 OHMS
A2-B	CCOIL BUS #8		
H3-A	CCOIL BUS #1	>20 KOHMS	INF

	GND		
V3-A	CCOIL BUS #3	>20 KOHMS	INF
	GND		
A2-A	CCOIL BUS #7	>20 KOHMS	INF
	GND		
A3 Corrector Coil resistance			
A3-A	CCOIL BUS #5	*14 OHMS*	13.9 OHMS
A3-B	CCOIL BUS #6		
B3 Corrector Coil resistance			
B3-A	CCOIL BUS #7	28 OHMS	28.5 OHMS
B3-B	CCOIL BUS #8		
A4 Corrector Coil resistance			
A4-A	CCOIL BUS #5	12 OHMS	12.3 OHMS
A4-B	CCOIL BUS #6		
A3-A	CCOIL BUS #1	>20K OHMS	INF
	GND		
B3-A	CCOIL BUS #3	>20K OHMS	INF
	GND		
A4-A	CCOIL BUS #7	>20K OHMS	INF
	GND		

B4 Corrector Coil resistance			
B4-A	CCOIL BUS #7	*13 OHMS*	13.4 OHMS
B4-B	CCOIL BUS #8		
B6 Corrector Coil resistance			
B6-A	CCOIL BUS #5	100 OHMS	100.6 OHMS
B6-B	CCOIL BUS #6		
B4-A	CCOIL BUS #1	>20K OHMS	INF
	GND		
B6-A	CCOIL BUS #3	>20K OHMS	INF
	GND		

	Expected	Measured
EE8123	>20M OHMS	INF
EE8113		
EE8123	>20M OHMS	INF
EE8223		
EE8123	>20M OHMS	INF
EE8323		
EE8123	>20M OHMS	INF
EE8313		
EE8123	>20M OHMS	INF
EE8423		

	Expected	Measured
EE8123	>20M OHMS	INF
EE8413		
EE8123	>20M OHMS	INF
EE8613		
EE8113	>20M OHMS	INF
EE8223		
EE8113	>20M OHMS	INF
EE8323		
EE8113	>20M OHMS	INF
EE8323		

		EE8123	>20M OHMS	INF		**EE8113**	>20M OHMS	INF		
		EE8413				**EE8313**				
			Expected	Measured			Expected	Measured		
		EE8113	>20M OHMS	INF		**EE8223**	>20M OHMS	INF		
		EE8423				**EE8613**				
		EE8113	>20M OHMS	INF		**EE8323**	>20M OHMS	INF		
		EE8413				**EE8313**				
		EE8113	>20M OHMS	INF		**EE8323**	>20M OHMS	INF		
		EE8613				**EE8423**				
		EE8223	>20M OHMS	INF		**EE8323**	>20M OHMS	INF		
		EE8323				**EE8413**				
		EE8223	>20M OHMS	INF		**EE8323**	>20M OHMS	INF		
		EE8313				**EE8613**				
		EE8223	>20M OHMS	INF		**EE8313**	>20M OHMS	INF		
		EE8423				**EE8423**				
		EE8223	>20M OHMS	INF		**EE8313**	>20M OHMS	INF		
		EE8413				**EE8413**				
		EE8313	>20M OHMS	INF		**EE8423**	>20M OHMS	INF		
		EE8613				**EE8613**				
		EE8423	>20M OHMS	INF		**EE8413**	>20M OHMS	INF		

EE8413

Measure Vtap to each Ccoil

	Expected	Measured
H3A	<5 OHMS	1.18 OHMS
EE8123		
V3A	<5 OHMS	1.20 OHMS
EE8113		
B6A	<5 OHMS	1.20 OHMS
EE8613		
B3A	<5 OHMS	1.24 OHMS
EE8313		
A4A	<5 OHMS	1.73 OHMS
EE8423		
B4A	<5 OHMS	1.17 OHMS
EE8413		
A3A	<5 OHMS	1.18 OHMS
EE8323		
A2A	<5 OHMS	2.05 OHMS
EE8223		

EE8613

	Expected	Measured
H3B	24 OHMS	22.77 OHMS
EE8123		
V3B	19 OHMS	19.06 OHMS
EE8113		
B6B	100 OHMS	101.63 OHMS
EE8613		
B3B	29 OHMS	29.42 OHMS
EE8313		
A4B	12 OHMS	13.23 OHMS
EE8423		
B4B	13 OHMS	14.26 OHMS
EE8413		
A3B	13 OHMS	14.81 OHMS
EE8323		
A2B	10 OHMS	9.71 OHMS
EE8223		

Measure continuity of Q1 Ccoil through bus

Ccoil	Bus	OK??
V1A	3	YES
V1B	4	YES
H1A	1	YES
H1B	2	YES

Measure continuity of Q2 Ccoil through bus

Ccoil	Bus	OK??
V2A	3	YES
V2B	4	YES
H2A	1	YES
H2B	2	YES

Measure Ccoil through bus of Q1 to GND

Ccoil	Bus	OK??
V1A	3	YES
V1B	4	YES
H1A	1	YES
H1B	2	YES

Measure Ccoil through bus of Q2 to GND

Ccoil	Bus	OK??
V2A	3	YES
V2B	4	YES
H2A	1	YES
H2B	2	YES

Hypertronics Connector Pin Locations Q3 Lead (IP) End
VIEW: Female (receptacle) solder cup side

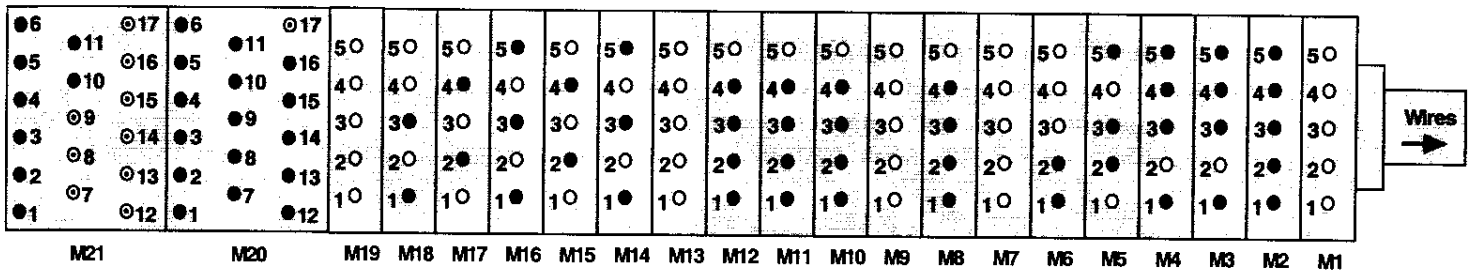

- ● Hole filled in grey: Wire soldered to pin.
- ⊙ Hole with dot in center: Pin exists but no wire soldered to it.
- ○ Hole filled in white: No pin. Hole is drilled out.

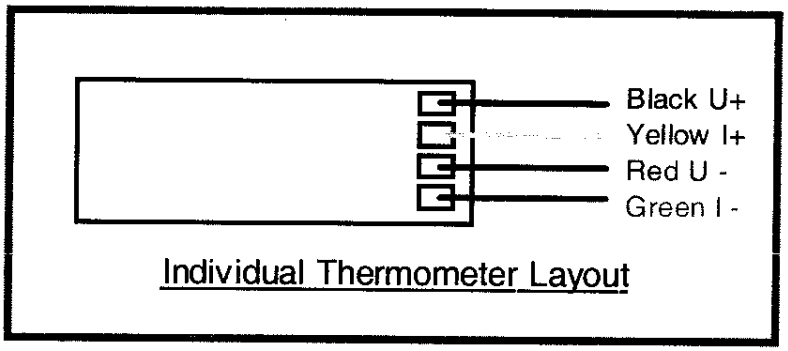

Note(s):

Ensure the Hypertronics cover has NOT been installed.

Technician(s) _____ Date 8/10/2005

22.3 Inspect Hypertronics Connector. Ensure that it is free of flux and that Kapton has been installed properly.

Responsible Authority/Physicist _____ Date 10-AUG-2005

22.4 After LHC Project Physicist / designee has signed the above step, complete the installation of the Hypertronics.

Technician(s) _____ Date 8/10/2005

23.0 Final Electrical Inspection

23.1 Perform an electrical inspection on each of the Individual Quadrants and the Cold Mass. Refer to the Valhalla and Leader Free Standing Coil Measurement Procedure (ES-292306).

To measure the Resistance of a Q3 Cold Mass:

1. Use Valhalla Scientific 4300B digital micro-ohmmeter.
2. Set Test Current to 0.1 amp.
3. Set Scale to 2V full scale.
4. Turn temperature compensation on.
5. Turn test current off.
6. Connect I_{HI} to "A" Lead as shown in figure 23.1-A.
7. Connect I_{LO} to "B" Lead as shown in figure 23.1-A.
8. Turn test current on.
9. Connect V_{HI} and V_{LO} to voltage taps as shown in resistance table.
10. To measure Total with leads, connect V_{HI} to "A" Lead and V_{LO} to "B" Lead.
11. At the IP End, jumper the 8Ka leads as shown in Figure 23.1-A.
12. Read resistance and record in traveler.

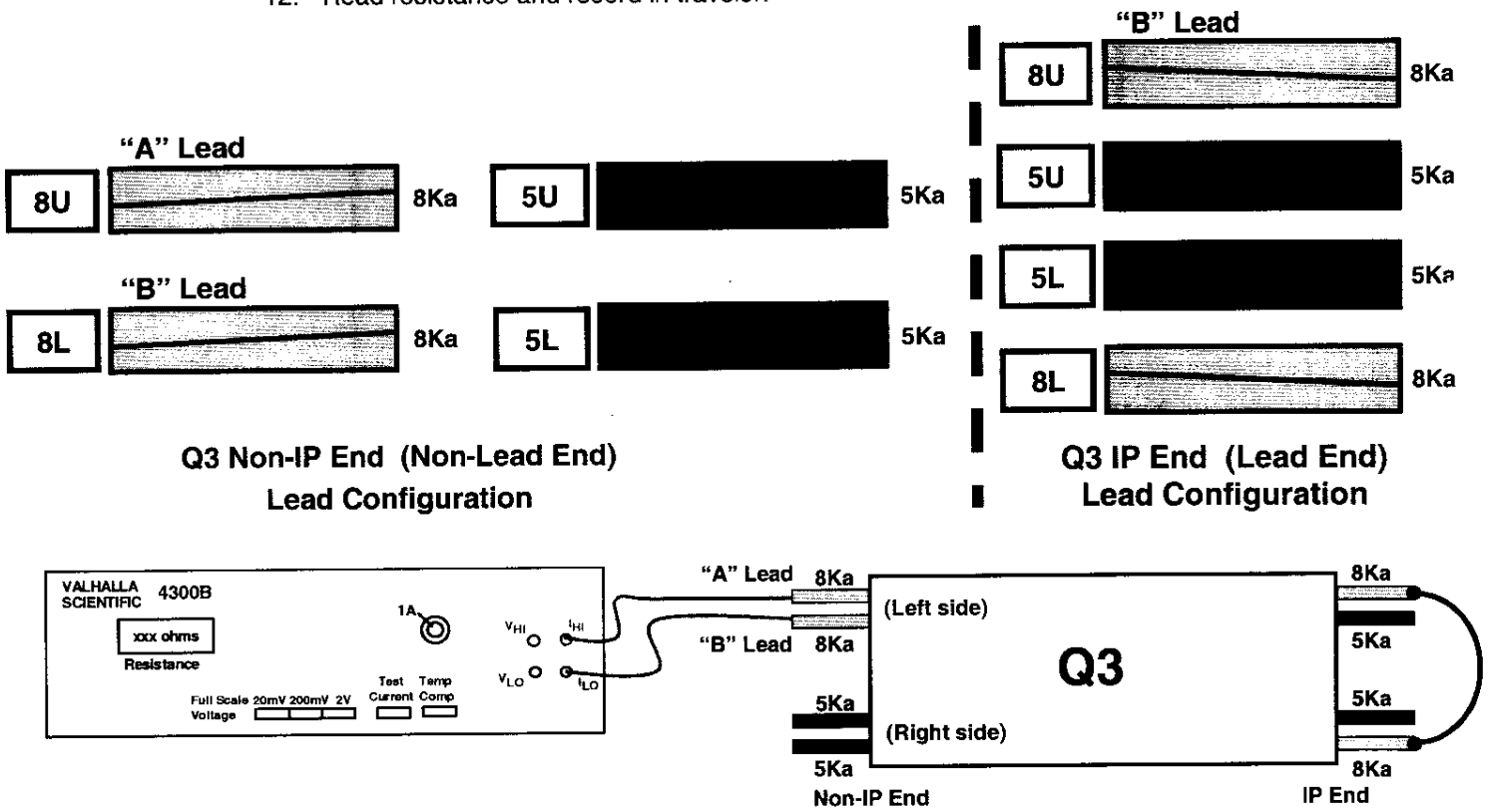

Figure 23.1-A

(Q3) Resistance				Nominal 3.35 to 3.45 Ω
Voltage Tap Serial Numbers				Total Resistance
Connect	Fermi	CERN	KEK	
V_{HI}	VTa1Q3	EE1113	a1	3.423 Ω
V_{LO}	VTc1Q3	EE1213	c1	
V_{HI}	VTc1Q3	EE1213	c1	3.422 Ω
V_{LO}	VTb1Q3	EE1313	b1	
V_{HI}	VTa1Q3	EE1113	a1	6.845 Ω
V_{LO}	VTb1Q3	EE1313	b1	

		Total Resistance with Leads
		Nominal 6.75 to 6.85 Ω
V_{HI}	8U Q4 Power Lead	6.868 Ω
V_{LO}	8L Q3 Power Lead	

Technician(s) 8/10/05 Date

Check resistance of Redundant Voltage Taps.

Q3 Redundant Voltage Taps				Nominal 3.35 to 3.45 Ω
Connect	Fermi	CERN	KEK	Resistance
V_{HI}	VTa2Q3	EE1123	a2	3.423 Ω
V_{LO}	VTc2Q3	EE1223	c2	
V_{HI}	VTc2Q3	EE1223	c2	3.423 Ω
V_{LO}	VTb2Q3	EE1323	b2	

Technician(s) 8/10/05 Date

To measure Ls and Q of a Q3 Cold Mass:

1. Use Agilent 4263B LCR Meter.
2. Turn power on by pushing line button. Wait 30 seconds until display screen is lit.
3. Recall program #1. To do this, push recall (Rcl), then push #1, then push Enter.
4. Push Auto/Hold button to release hold.
5. Verify that the frequency displayed in the upper right corner of the display screen is 1000 Hz and the level recorded in the lower right corner of the display screen is 1V or 1000 mV.
6. Connect H_{cur} to "A" power lead as shown in figure 6.2-B
7. Connect L_{cur} to "B" power lead as shown in figure 6.2-B.
8. Connect H_{pot} and L_{pot} buttons to voltage taps as shown below.
9. Read Ls and Q from display and record in table.

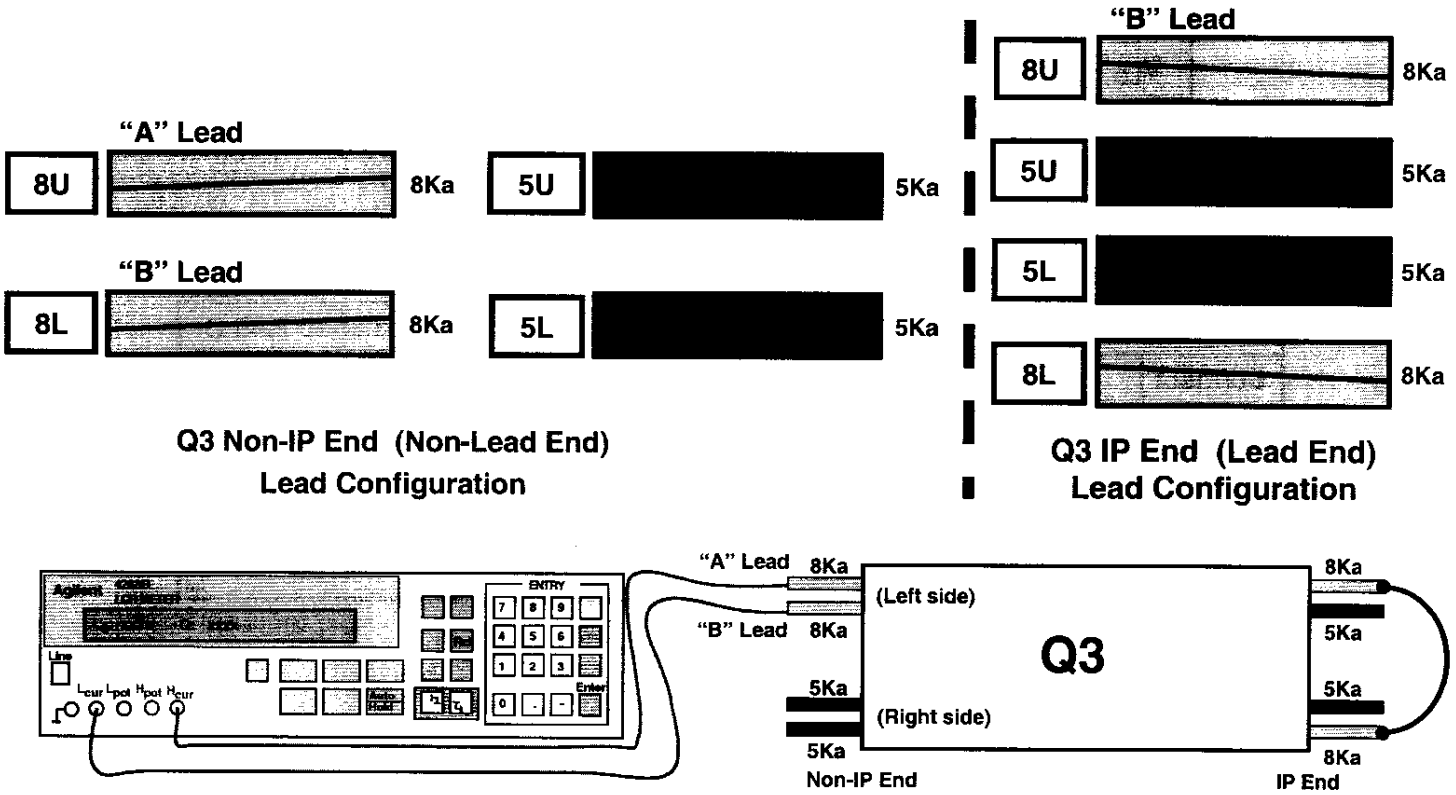

Figure 23.1-B

(Q3) Inductance				Nominal 15 to 16 mH
Voltage Tap Serial Numbers				Total Inductance
Connect	Fermi	CERN	KEK	
H_{POT}	VTa1Q3	EE1113	a1	15.245 mH
L_{POT}	VTc1Q3	EE1213	c1	
H_{POT}	VTc1Q3	EE1213	c1	15.223 mH
L_{POT}	VTb1Q3	EE1313	b1	

				Nominal 30 to 32 mH
				Total Inductance
H_{POT}	VTa1Q3	EE1113	a1	30.461 mH
L_{POT}	VTb1Q3	EE1313	b1	

(Q3) Q-Factor				Nominal 1.0 to 1.2
Voltage Tap Serial Numbers				Total Q
Connect	Fermi	CERN	KEK	
H_{POT}	VTa1Q3	EE1113	a1	1.1
L_{POT}	VTc1Q3	EE1213	c1	
H_{POT}	VTc1Q3	EE1213	c1	~~15.223~~ 1.1
L_{POT}	VTb1Q3	EE1313	b1	

				Nominal 1.0 to 1.2
				Total Q
H_{POT}	VTa1Q3	EE1113	a1	1.1
L_{POT}	VTb1Q3	EE1313	b1	

Technician(s)

8/10/05
Date

To measure the resistance of a Thermometer (RTD):

1. Use Hewlett Packard HP3457A digital multimeter.
2. Record temperature of building within +/- 5 degrees.
3. Press line button to turn line on.
4. Connect wires as shown in Figure below.
   U+ (Black) to Sense HI
   I+ (Yellow) to Input HI
   U- (Red) to Sense LO
   I- (Green) to Input LO
5. Push blue button (function key) once.
6. Push OHMF button.
7. Verify arrow in readout is above the 4WΩ (meaning a 4 wire resistance measurement).
8. Read resistance in ohms and record in traveler.

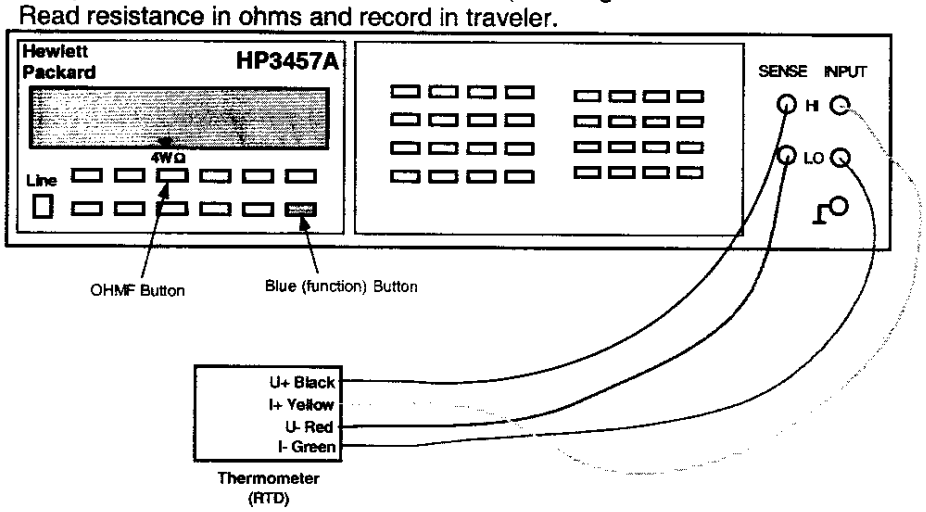

To measure the resistance of a Cryogenic (Warm-up) Heater

1. Use Hewlett Packard HP3457A digital multimeter.
2. Record temperature of building within +/- 5 degrees.
3. Press line button to turn line on.
4. Connect wires as shown in Figure below.
5. Push blue button (function key) once.
6. Push OHMF button.
7. Verify arrow in readout is above the 4WΩ (meaning a 4 wire resistance measurement).
   Note: Although this is technically a 4 wire measurement, it is effectively a 2 wire measurement, since there are only 2 wires connected to each heater.
8. Read resistance in ohms and record in traveler.

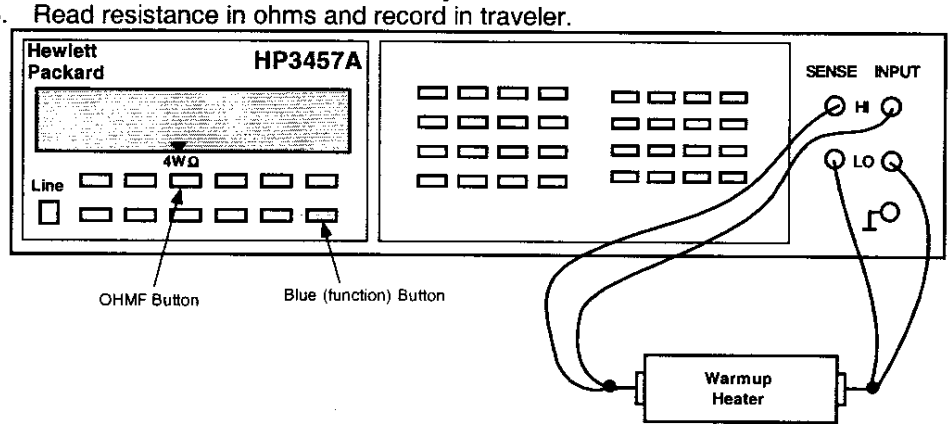

Q3 - RTD's and Cryogenic (warm-up) Heaters				
Temperature of Building (± 5°): 78°				
Component	Fermi	CERN	Range	Resistance
Q3 RTD, primary	TaQ3	TT8313	60 to 70 Ω	64.125 Ω
Q3 RTD, redundant	TbQ3	TT8323	60 to 70 Ω	65.75 Ω
Q3 Cryogenic (warm-up) Heater (LE) - wire at top (CERN #1 I+)	W1aQ3	EH8313+	16 to 18.5 Ω	17.7505 Ω
Q3 Cryogenic (warm-up) Heater (LE) - wire at bottom (CERN #1 I-)	W2aQ3	EH8313-		
Q3 Cryogenic (warm-up) Heater (Non-LE) - wire at top (CERN #2 I+)	W1bQ3	EH8323+	16 to 18.5 Ω	17.3440 Ω
Q3 Cryogenic (warm-up) Heater (Non-LE) - wire at bottom (CERN #2 I-)	W2bQ3	EH8323-		

Technician(s)

8/10/05
Date

Using the Hewlett Packard HP3457A digital multimeter, measure the Protection (Strip) Heater Resistance for Q3.

Q3 Protection (Strip) Heater Resistance					
Fermi	CERN	KEK	Description	Limit	Resistance
H1aQ3	YT1113+	HA1	Circuit A	28 to 32 Ω	30.126 Ω
H2aQ3	YT1113-	HA2			
H1bQ3	YT1123+	HB1	Circuit B	28 to 32 Ω	30.213 Ω
H2bQ3	YT1123-	HB2			

Technician(s)

8/10/05
Date

23.2 Hipot according to table below. Hipot to 3kV. Maximum leakage is 3μA.

STOP

Have Crew Chief verify setup and sign below before continuing.

Crew Chief

8-10-05
Date

Hipot Heaters to Coil and Ground.

High Potential	Grounded	Floating	Leakage
All Strip Heaters	Coils, Yoke, Q3 Instrumentation Bus, Lead and Corrector Coil Busses, RTD's and Warm-up Heaters	Nothing	451nA

Hipot Coil to Heaters and Ground.

High Potential	Grounded	Floating	Leakage
All Coils	Strip Heaters, Yoke, Q3 Instrumentation Bus, 8kA and 5kA Lead Busses and Corrector Coil Busses, RTD's and Warm-up Heaters	Nothing	558nA

Technician(s)

8/10/05
Date

STOP

23.3 Ensure electrical measurements are acceptable and confirm Hypertronics Connector has been installed properly.

Responsible Authority/Physicist

10-AUG-2005
Date

24.0 Production Complete

24.1 Process Engineering verify that the Q3 Cold Mass Module Assembly Traveler (5520-TR-333729) is accurate and complete. This shall include a review of all steps to ensure that all operations have been completed and signed off. Ensure that all Discrepancy Reports, Nonconformance Reports, Repair/Rework Forms, Deviation Index and dispositions have been reviewed by the Responsible Authority for conformance before being approved.

Comments:

_____

_____

_____

_____

_____

_____

Process Engineer/Designee _____ Date _____

LHC Serial No.: LMQXC04-0
Notes:

CERN
CH-1211 Geneva 23
Switzerland

the **Large Hadron Collider** project

AT MEL Document No.
LHC-MCSOX-FR-0001 rev. **1.0**

EDMS Document No.

Certificate of Conformity

Part name:	MCSOX Inner Triplet Corrector Package		
LHC Identification No.:	HCMCSOX001-AN000005	Serial No.:	HCMCSOX001-AN000005
Shipped To:	CERN	***Shipment No:***	***01***
		Shipment	***14/11/03***
Manufacturer:	Ansaldo	***Order No.:***	CD1000630
Related tech. Specification:	LHC-MQSXA-CI-0001 and addenda		
Related drawings:	LHCMQSXA0020 (620RM9829)		
Responsible person at CERN:	Mikko Karppinen	***Tel.***	+41 22 767 4305
		E-mail.	Mikko.Karppinen@cern.ch
Responsible person at Ansaldo:	Gianluigi Gaggero	***Tel.***	+39 010 6489 210
		E-mail.	gaggero.gianluigi@as-g.it
Ansaldo certifies that the delivered material conforms to the technical specification mentioned above:			
Date: 11/11/03	***Name: G. Gaggero***		***Signature:*** ***Gianluigi Gaggero***

Acceptance test results

		MCOSX	***MCOX***	***MCSSX***	***Remarks:***
RT dc resistance (Ω):	***Ansaldo:***	***12.04***	***13.04***	***13.55***	
	CERN:	***12.01***	***13.03***	***13.59***	
	CMA[1]:	11.81	12.80	13.35	
Inductance @1 kHz/100 Hz (mH)	***Ansaldo:***	***3.30 3.30***	***4.47 4.47***	***7.84 7.84***	
	CERN	***3.3/3.3***	***4.47/.4.47***	***7.83/7.84***	
	CMA:	3.3/3.3	4.476/4.477	7.87/7.84	
R.T. leakage current to ground @ 1.5 kV (μA):	***Ansaldo:***	***0.061***	***0.051***	***0.065***	
	CERN:	***<10nA***	***<10nA***	***20nA***	
	CMA:				

	Cold Mass Assembler
Visual inspection	ACCEPTABLE
Name / Signature	[signature]
Date	12-9-04

Accepted: ☑

Rejected: ☐

[1] Cold Mass Assembler

Comments (Ansaldo):	

Comments (CERN):	***Magnetic axis have been measured at warm.***
	Scribe line made relative to the measured field at warm (correction of 1.27mm anti-clock-wise from the dowel pin holes on the conn. plate.)

Comments (CMA):	

CERN
CH-1211 Geneva 23
Switzerland

the **Large Hadron Collider** project

AT MEL Document No.
LHC-MQSX-FR-0001 rev. **1.0**

EDMS Document No.

Certificate of Conformity

Part name:	MQSX Inner Triplet Skew Quadrupole Corrector		
LHC Identification No.:	HCMQSX_001-AN000005	Serial No.:	HCMQSX_001-AN000005
Shipped To:	CERN	***Shipment No:***	***02***
		Shipment	***14/11/03***
Manufacturer:	Ansaldo	***Order No.:***	CD1000630
Related tech. Specification:	LHC-MQSXA-CI-0001 and addenda		
Related drawings:	LHCMQSXA0020 (620RM9829)		
Responsible person at CERN:	Mikko Karppinen	***Tel.***	+41 22 767 4305
		E-mail.	Mikko.Karppinen@cern.ch
Responsible person at Ansaldo:	Gianluigi Gaggero	***Tel.***	+39 010 6489 210
		E-mail.	gaggero.gianluigi@as-g.it
Ansaldo certifies that the delivered material conforms to the technical specification mentioned above:			
Date: 10/11/03	***Name: G. Gaggero***		***Signature:*** ***Gianluigi Gaggero***

Acceptance test results

		MQSX	***Remarks:***
RT dc resistance (Ω):	***Ansaldo:***	***7.60***	
	CERN:	***7.60***	
	CMA[1]:	7.48	
Inductance @1 kHz/100 Hz (mH)	***Ansaldo:***	***14.23*** ***14.24***	
	CERN	***14.23/14.24***	
	CMA:	14.2 / 14.21	
R.T. leakage current to ground @ 1.5 kV (μA):	***Ansaldo:***	***0.01***	
	CERN:	***85nA***	
	CMA:		

	Cold Mass Assembler
Visual inspection	ACCEPTABLE
Name / Signature	[signature]
Date	12-9-04

Accepted: ☒

Rejected: ☐

Comments (Ansaldo):	

Comments (CERN):	***Magnetic axis have been measured at warm.***
	Scribe line made relative to magnetic field at warm (correction of 1.7mm clock-wise from the dowel pin holes on the conn. plate.)

Comments (CMA):	

CERN LHC MQXA

Acceptance Test at FNAL

QUALITY RECORD

Cryogenics Science Center

KEK, High Energy Accelerator Research Organization

Magnet ID :_____

Date of approval :_____

Approved by :_____ (FNAL)

:_____ (KEK)

Ver. 0
Ver A (with initial results)

1. Appearance Check

Procedure	Criteria
Check appearance of the magnet by visual inspection.	No harmful defects or deformation
Result at TOSHIBA	
Acceptable	
Result at FNAL	

2. Interface Dimensions

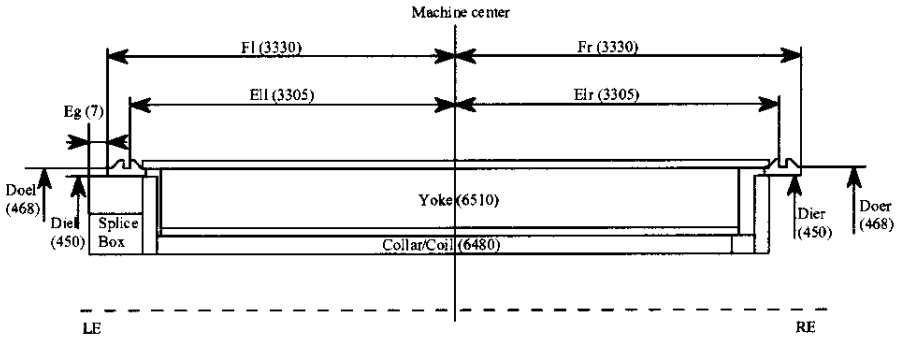

1) Dimensions	Unit:mm
Procedure	Criteria
1) Dimension Check Measure following dimensions a, b, c : Measuring range: every 45 deg. from 0 deg. d : Splice Box : four points	
a) Machine center - Interface	a) 3330 –6/+0
b) Interface outer diameter (Doel,Doer)	b) ϕ468 –4/+0
c) Interface inner diameter (Diel,Dier)	c) ϕ450 –4/+0
d) End Ring - Splice box(Eg)	d) 7 -5/+5

Result at TOSHIBA							
Critera	3330 -6/+0		ϕ468 -4/+0		ϕ450 -4/+0		7
Position	Fl	Fr	Doel	Doer	Diel	Dier	Eg
0 deg.	3329.5	3330.0	467.70	467.95	450.08	450.57	5.76
45 deg.	3330.0	3330.0	467.28	466.92	449.61	449.35	
90 deg.	3330.5	3330.0	467.62	467.13	449.83	449.40	6.77
135 deg.	3330.5	3330.5	466.90	466.92	449.29	449.52	
180 deg.	3331.0	3330.5					5.17
225 deg.	3331.0	3330.5					
270 deg.	3331.0	3330.5					5.80
315 deg.	3330.0	3330.0					
Result	Acceptable		Acceptable		Acceptable		Acceptable

Result at FNAL							
Critera	3330 -6/+0		ϕ468 -4/+0		ϕ450 -4/+0		7
Position	Fl	Fr	Doel	Doer	Diel	Dier	Eg
0 deg.	3329.5	3330.0					
45 deg.							
90 deg.	3330.0	3329.8					
135 deg.							
180 deg.	3331.0	3329.9					
225 deg.							
270 deg.	3329.9	3329.9					
315 deg.							
Result							

2) End ring interface		
Procedure		Criteria
Check the weld edge preparation using ϕ449 +0/-0.02 gauge.		1) The gauge shall be inserted into the end ring. 2) Measurement data will be reported if the gage cannot be inserted.
Measurement part	Result at TOSHIBA	Remarks
LE side	Acceptable	LE : 3mm
RE side	Acceptable	RE : 5mm
Measurement part	Result at FNAL	Remarks
LE side		
RE side		

3) Radial envelope	
Procedure	Criteria
Check shell radial envelope using ϕ530mm gauge. (dummy cold-mass support)	The gauge shall pass the magnet.
Result at TOSHIBA	
Acceptable	
Result at FNAL	

4) Magnet bore	
Procedure	Criteria
Check appearance of the magnet bore by visual inspection.	No harmful defects or deformation
Result at TOSHIBA	
Acceptable M.P Lap was damaged at end section (LE side and RE side)	
Result at FNAL	

5) Magnet bus slot	
Procedure	Criteria
Check the bus slot using bus line model gauge.	The gauge shall pass the magnet bus slot.
Result at TOSHIBA	
Acceptable	
Result at FNAL	

6) Weight	
Procedure	Criteria
Measure the magnet weight.	Weight < 8500kg
Result at TOSHIBA	
8340 Kg	Acceptable
Result at FNAL	

7) Length of magnet lead, QPH wire, Voltage taps	
Procedure	Criteria
Check the lengths of magnet lead, QPH wire, voltage taps.	1) Magnet lead : > 500mm from magnet LE end plate 2) Voltage taps wire : > 2000mm from magnet LE end plate 3) QPH wire : >2000mm from magnet LE end plate

Result at TOSHIBA		
Measuring wire	Measured Value	Result
1) Magnet lead	>500mm	Acceptable
2) Voltage taps	>2000mm	Acceptable
3) QPH wire	>2000mm	Acceptable

Result at FNAL		
Measuring wire	Measured Value	Result
1) Magnet lead		
2) Voltage taps		
3) QPH wire		

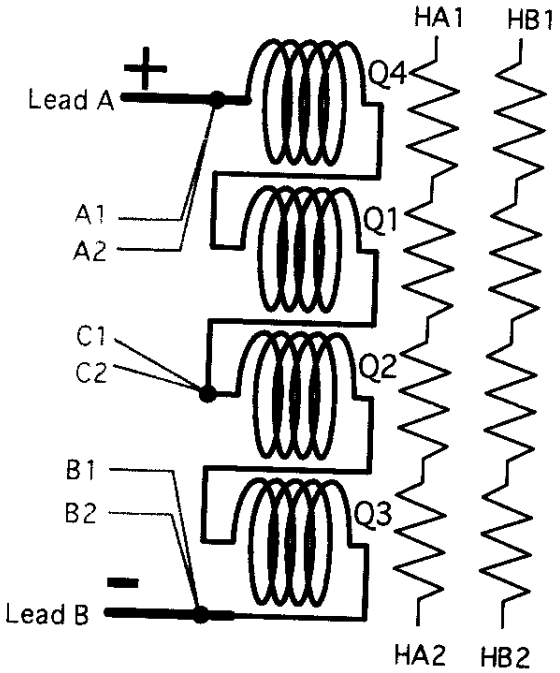

8) Cable tags

Procedure	Criteria
Check the cable tags.	Consistent to the tag No. table.

Vtaps & QPH Tag No. table

Lead	Tag Name	Description
Voltage taps	A1, A2	Taps from A lead
	B1, B2	Taps from B lead
	C1, C2	Center taps
Quench heaters	HA1, HA2	Heater A
	HB1, HB2	Heater B

Result at TOSHIBA	
1)Voltage taps	Acceptable
2)Quench heaters	Acceptable

Result at FNAL	
1)Voltage taps	
2)Quench heaters	

3. Coil Resistance

Procedure	Criteria
Measure the magnet total resistance and coil temperature at coil current of DC1A. Calculate resistance at 20 °C; R_{20}. $R_{20}=V/I/(1+0.00393*(T_{coil}-20))$ V : Voltage between magnet leads (V) I : Coil current obtained by shut resistor (A) T_{coil} : coil temperature (°C)	1) Compare with R_{20} at TOSHIBA. Variation of R_{20} < 0.005 Ω 2) Voltage taps(C-A, C-B): Measurement Only

Result at TOSHIBA

T_{coil}				Not Reported			
Magnet total voltage (V)				Current (A)		Magnet total resistance R_{20} (Ω)	
Not Reported				Not Reported		6.79921	
Voltage taps tag No.	V (V)	I (A)	R_{20} (Ω)	Voltage taps tag No.	V (V)	I (A)	R_{20} (Ω)
C1 - A1	Not Reported	Not Reported	3.39735	C2 - A1	Not Reported	Not Reported	3.39735
C1 - A2	Not Reported	Not Reported	3.39737	C2 - A2	Not Reported	Not Reported	3.38736
C1 - B1	Not Reported	Not Reported	3.39650	C2 - B1	Not Reported	Not Reported	3.39661
C1 - B2	Not Reported	Not Reported	3.39661	C2 - B2	Not Reported	Not Reported	3.39661

Acceptable

Result at FNAL

T_{coil}		~~6.809~~	
Magnet total voltage (V)	Current (A)	Magnet total resistance R_{20} (Ω)	Variation (Ω) ($R_{20\text{-TOSHIBA}}$ - $R_{20\text{-FNAL}}$)
		6.809	
Voltage taps tag No.	R_{20} (Ω)	Voltage taps tag No.	R_{20} (Ω)
C1 - A1	3.401	C2 - A1	3.4
C1 - A2	3.401	C2 - A2	3.4
C1 - B1	3.399	C2 - B1	3.398
C1 - B2	3.399	C2 - B2	3.398

4. Instrumentations

1) Voltage taps

Procedure	Criteria
Check resistance of all voltage taps by four terminal method at 1A. Magnet lead : Q4 4th : + Magnet lead : Q3 3rd : -	Magnet lead + : A1, A2 (Pole4 Out) Magnet lead - : B1, B2 (Pole3 Out) Center taps : C1, C2 (Pole1 Out) Variation of R_{20}(A1),R_{20}(A2) : < 0.1% Variation of R_{20}(B1),R_{20}(B2) : < 0.1% Variation of R_{20}(C1),R_{20}(C2) : < 0.1%

Result at TOSHIBA

Voltage taps No.	Resistance(Ω)	Voltage taps No.	Resistance(Ω)	Variation(%)	Result
A1	0.00265	A2	0.00265	0.00	Acceptable
C1	3.40008	C2	3.40008	0.00	Acceptable
B1	6.79673	B2	6.79673	0.00	Acceptable

Result at FNAL

Voltage taps No.	Resistance(Ω)	Voltage taps No.	Resistance(Ω)	Variation(%)	Result
A1	.003	A2	.003		
C1	3.30	C2	3.30		
B1	6.79	B2	6.79		

2) QPH

Procedure	Criteria
Measure the resistance of QPH.	QPH resistance : 30 +4/-4Ω (HA,HB)

Result at TOSHIBA

QPH No.	QPH Resistance(Ω)	Result
HA	28.6	Acceptable
HB	28.6	Acceptable

Result at FNAL

QPH No.	QPH Resistance(Ω)	Result
HA	28.26	
HB	28.33	

5. Coil Inductance

Procedure	Criteria
Measure inductance of magnet at frequencies of 100Hz and 1kHz using LCR meter.	1) Variation of inductance Voltage taps No. C-A, inductance Voltage taps No. C-B : < 5% 2) Total inductance of the magnet :Measurement only

Result at TOSHIBA

Voltage taps tag No.	100Hz	Result (%)	1kHz	Result (%)	Voltage taps tag No.	100Hz	Result (%)	1kHz	Result (%)
C1 - A1	37.07	0.03	13.293	0.03	C2 - A1	37.08	0.05	13.293	0.03
C1 - A2	37.07		13.293		C2 - A2	37.08		13.293	
C1 - B1	37.06		13.289		C2 - B1	37.06		13.289	
C1 - B2	37.06		13.289		C2 - B2	37.06		13.289	

	100Hz	1kHz
Magnet	87.15	30.89

Acceptable

Result at FNAL

Voltage taps tag No.	100Hz	Result (%)	1kHz	Result (%)	Voltage taps tag No.	100Hz	Result (%)	1kHz	Result (%)
C1 - A1	37.09		13.35		C2 - A1	37.09		13.35	
C1 - A2	37.09		13.35		C2 - A2	37.09		13.35	
C1 - B1	37.07		13.34		C2 - B1	37.07		13.34	
C1 - B2	37.07		13.34		C2 - B2	37.07		13.34	

	100Hz	1kHz
Magnet	87.25	31.30

6. Turn to Turn Insulation

Procedure	Criteria
Apply impulse voltage of 1000V between the magnet leads and record the signal. Instrumentation: Impulse generator, recorder	Compare the signal with one at KEK. Attach rthe chart.
Result at TOSHIBA	
Acceptable	See appendix
Result at FNAL	

7. Coil Insulation

1) Insulation Resistance			
Procedure		Criteria	
Apply 1kV-DC to the coil in 1 min. and measure insulation resistance by using insulation tester. High voltage : Coils□Ground : Collar, Yoke, Shell, QPH		Insulation resistance > 100MΩ	
Result at TOSHIBA			
Temperature(°C)	Humidity(%)	Insulation(MΩ)	Result
23	18	> 2000	Acceptable
Result at FNAL			
Temperature(°C)	Humidity(%)	Insulation(MΩ)	Result

2) Hi-pot test			
Procedure		Criteria	
Apply 3kV-DC to the coil in 1 min. and measure leak current or insulation resistance. High voltage : Coil Ground : Collar, Yoke, Shell, QPH		No break down Record leak current or resistance.	
Result at TOSHIBA			
Temperature (°C)	Humidity (%)	Leak current (mA)	Result
23	18	0.00	Acceptable
Result at FNAL			
Temperature (°C)	Humidity (%)	Leak current or resistance	Result

8. QPH Insulation

1) Insulation Resistance				
Procedure			Criteria	
Apply 1kV-DC to the QPH in 1 min. and measure insulation resistance by using insulation tester. High voltage : QPH Ground : Coil, Collar, Yoke, Shell			Insulation resistance > 100MΩ	
Result at TOSHIBA				
Heater No.	Temperature (°C)	Humidity (%)	Insulation(MΩ)	Result
HA	23	18	> 2000	Acceptable
HB			> 2000	Acceptable
Result at FNAL				
Heater No.	Temperature (°C)	Humidity (%)	Insulation(MΩ)	Result
HA				
HB				

2) Hi-pot test				
Procedure			Criteria	
Apply 3kV-DC to the QPH in 1 min. and measure leak current or insulation resistance. High voltage : QPH Ground : Coil, Collar, Yoke, Shell			No break down Record leak current or resistance.	
Result at TOSHIBA				
Heater No.	Temperature (°C)	Humidity (%)	Leak current (mA)	Result
HA	23	18	0.00	Acceptable
HB			0.00	Acceptable
Result at FNAL				
Heater No.	Temperature (°C)	Humidity (%)	Leak current or resistance	Result
HA				
HB				

9. QPH Discharge Test

1) Appearance check	
Procedure	Criteria
Check appearance of QPH wires by visual inspection.	No harmful defects or deformation.
Result at TOSHIBA	
Acceptable	
Result at FNAL	

2) QPH discharge test		
Procedure		Criteria
Charge the power supply above 850 V and fire QPHs.		No strange signal observed. Attach the chart.
Result at TOSHIBA		
HA	Acceptable	See appendix
HB	Acceptable	See appendix

3) QPH resistance				
Procedure		Criteria		
Measure resistance before/after the discharge test.		Resistance change < 10%		
Result at TOSHIBA				
QPH No.	Before (Ω)	After (Ω)	Variation (%)	Result
HA	28.6	28.6	0.0	Acceptable
HB	28.6	28.6	0.0	Acceptable
Result at FNAL				
QPH No.	Before (Ω)	After (Ω)	Variation (%)	Result
HA				
HB				

CERN
CH-1211 Geneva 23
Switzerland

the **Large Hadron Collider** project

LHC ICP Document No.
LHC-MCBX-FR-0001 rev. **1.0**

EDMS Document No.

Certificate of Conformity

Part name:	MCBX Inner Triplet Dipole Corrector		
LHC Identification No.:	HCMCBX_001-SI000027	Serial No.:	HCMCBX_001-SI000027
Shipped To:	CERN	***Shipment No:***	***27***
		Shipment	***28/05/04***
Manufacturer:	SIGMAPHI	Contract No.:	F375/LHC/LHC
Related tech. Specification:	LHC-MCBX-CI-0001 and addenda		
Related drawings:	LHCMCBX_0012 (1525-CN-1001)		
Responsible person at CERN:	Mikko Karppinen	***Tel.***	+41 22 767 4305
		E-mail.	Mikko.Karppinen@cern.ch
Responsible person at SIGMAPHI:	Damien Neuvéglise	***Tel.***	+33 2 97 01 08 80
		E-mail.	dneuveglise@sigmaphi.fr
SIGMAPHI certifies that the delivered material conforms to the technical specification mentioned above:			
Date: 28/05/04	***Name: D.Neuvéglise***		***Signature: D.Neuvéglise***

Acceptance test results

		MCBXV (Inner)	***MCBXH (Outer)***	***Remarks:***
RT dc resistance (Ω):	***SIGMAPHI:***	***17.8***	***21.8***	
	CERN:			
	CMA[1]:	17.3	21.7	
Inductance @1 kHz/100 Hz (mH)	***SIGMAPHI:***	***66.01 / 112.95***	***68.27/ 161.78***	
	CERN			
	CMA:	65.9/111.9	67.4/160.9	
R.T. leakage current to ground @ 1.5 kV (μA):	***SIGMAPHI:***	***10E-9***	***15E-9***	
	CERN:			
	CMA:			

	Cold Mass Assembler	
Visual inspection	Acceptable	**Accepted:** ☐
Name / Signature	[signature]	**Rejected:** ☐
Date	8.29-05	

[1] Cold Mass Assembler

Comments (SigmaPhi):	

Comments (CERN):	***The magnetic axis of this assembly has not been measured at warm.***
	The scribe line is made relative to dowel pin holes on the connection plate.
	During the combined powering field was rotated 0-360 deg at the nominal current @ 4.3 K.
	During the combined powering field was rotated 0-360 deg at 80 % the nominal current with MCSX and MCTX powered at 100 A @ 1.9 K.
	During the indivual powering the MCBXV and MCBXH reached 700 A and 640 A respectively.

Comments (CMA):	

CERN
CH-1211 Geneva 23
Switzerland

the **Large Hadron Collider** project

AT MEL Document No.
LHC-MCSTX-FR-0001 rev. **1.0**

EDMS Document No.

Certificate of Conformity

Part name:	MCSTX Inner Triplet Sextupole Dodecapole Insert		
LHC Identification No.:	HCMCSTX001-CE000006	***Serial No.:***	**HCMCSTX001-CE000006**
Shipped To:	FNAL	***In MCBX assembly:***	HCMCBX_001-SI000027
		Shipment No:	***01***
Manufacturer:	CERN	***Shipment Date:***	***25/06/04***
Related tech. Specification:	LHC-MCSTX-CI-0001 (in preparation)		
Related drawings:	LHCMCSTX0001		
Responsible person at CERN:	Mikko Karppinen	***Tel.***	+41 22 767 4305
		E-mail.	Mikko.Karppinen@cern.ch
CERN certifies that the delivered material conforms to the technical specification mentioned above:			
Date: 22/10/03	***Name: M. Karppinen***		***Signature:*** *Mikko Karppinen*

Acceptance test results

		MCSX	***MCTX***	***Remarks:***
RT dc resistance (Ω):	***CERN:***	***27.84***	***98.69***	
	CMA[1]:	27.7	97.6	
Inductance @1 kHz/100 Hz (mH)	***CERN***	***2.25 / 4.77***	***24.25 / 31.37***	
	CMA:	2.20/4.75	24.24/31.2	
R.T. leakage current to ground @ 1.5 kV (μA):	***CERN:***	***0.0104***	***0.0104***	
	CMA:			

	Cold Mass Assembler
Visual inspection	
Name / Signature	
Date	

Accepted: ☐

Rejected: ☐

[1] Cold Mass Assembler

Comments (CERN):	***Magnetic axis have not been measured at warm.***

Comments (CMA):	

TD - Engineering Fabr tion Component Kit List

ORIGINAL

Process Engineering

Component Serial No.: LMQXC04
Kit submitted by: John Szostak | Ext. 2003
Fermi ID No.: 02943C
Date submitted: 21-Mar-05
Need date: 25-Mar-05
Deliver to: ICB
Use with Traveler No.: 333729
Job No.: 248
M&S task number: 300 | 1.1.1.3.4
Drawing Title: **Q3 MODULE ASSEMBLY**
Drawing No.: **ME-369900** | **Rev. B**
Drawing Title: **Q3 COLD MASS WELDED ASSEMBLY**
Drawing No.: **ME-390529** | **Rev. D**

Material Control

Parts available

Verified by: M. Schmidt
Fermi ID No.: 04223N
Date submitted to stockroom: 21-Mar-05

Parts issued

Issued by:
Fermi ID No.: 12792
Date issued: 3-24-05
Parts received by E&F:
Fermi ID No.: 02943C
Date received by E&F: 3/24/05

	Description	Dwg Size	Number	Rev	Unit	Quantity Required	Location	Quantity Issued	E&F Verified	Routing Form Number	Spares Number / Comment
1	26 GA. POLYIMIDE COATED WIRE (FOR VOLTAGE TAPS)	MA	369832	*	EA	8	ICB Has				
2	20 GA. POLYIMIDE COATED WIRE (FOR STRIP HTRS & WARMUP HTRS)	MA	369833	*	EA	6	ICB Has				
3	WARM-UP HEATER	MA	369834	A	EA	2	IB4 Bin	2		79919	59 pcs.
4	RTD ASSEMBLY	MA	369835	A	EA	2	R2,S2,L5	2		79920	18 pcs.
5	30 GA. POLYMIDE COATED CABLE (FOR RTD WIRE EXTENSIONS)	MA	369836	*	-	A / R					
6	RTD MOUNTING BLOCK	MB	369893	B	EA	2	IB4 Bin	2		8543	16 pcs.
7	.010" SOLDER STRIP	MA	369904	*	m	1	ICB Has				
8	KESTER 135 FLUX	MA	369911	*		A / R					
9	KEVLAR YARN	MA	369912	*	-	A / R					
10	SHCS #4-40 x 1/4" LG. S.S.	MA	369938	*	EA	4	IB4 Bin	4		79032	92 pcs.
11	WARM-UP HEATER BASE PLATE	MA	369997	A	EA	2	IB4 Bin	2		80096	14 pcs.

ORIGINAL

TD - Engineering Fabr tion Component Kit List

	Description	Dwg Size	Number	Rev	Unit	Quantity Required	Location	Quantity Issued	E&F Verified	Routing Form Number	Spares Number / Comment
12	SHCS M8 x 1.25 x 50mm LG S.S.	MA	393020	*	EA	1	IB4 Bin	1		82375	111 pcs.
13	SHCS #6-32 UNC x 1 LG S.S.	MA	393082	*	EA	4	IB4 Bin	4		81360	2119 pcs.
14	NUT, HEX #6-32 UNC S.S.	MA	393089	*	EA	4	IB4 Bin	4		82599	142 pcs.
15	FHSCS M8 x 18mm LG S.S.	MA	393175	*	EA	2	IB4 Bin	2		82114	92 pcs.
16	#10-32 x 5/8" LONG SHCS - S.S.	MA	393176	*	EA	2	IB4	2		82115	96 pcs.
17	RTD SCREWS	MA	393180	*	EA	4	IB4 Bin	4		79631	675 pcs.
18	RTD WASHERS	MA	393181	*	EA	4	IB4 Bin	4		81827	120 pcs.
19	SHCS, 5/16-18 UNC x 1 1/4 LG S.S. (FOR SPLICE HOUSING)	MA	393263	*	EA	8	IB4 Bin	8		82983	10 pcs.
20	SCREW, FLAT HEAD SOCKET M12 x 1.75 x 20mm LG S.S.	MA	393291	*	EA	2	IB4 Bin	2		80694	80 pcs.
21	HHCS M4 x .7 x 20mm LG S.S.	MA	393404	*	EA	4	R1,2,2	4		82390	146 pcs.
22	FHSCS 1/4-28 UNF x 1/2 LG S.S.	MA	393405	*	EA	4	R1,2,2	4		82391	142 pcs.
23	SHCS M8 x 1.25 x 40mm LG S.S.	MA	393409	*	EA	1	IB4 Bin	1		82393	99 pcs.
24	SHCS 1/4-20 UNC x 1.00 LG S.S.	MA	393422	*	EA	4	R1,2,2	4		82395	96 pcs.
25	SHCS, 5/16-18 UNC-2A x 1.00 LG S.S.	MA	393431	*	EA	2	IB4 Bin	2		82757	48 pcs.
26	SHCS, M6 x 20mm LG S.S.	MA	393444	*	EA	4	IB4 Bin	4		82758	96 pcs.
27	IP (LEAD) END BUS SPLICE CLAMP ASSEMBLY / Q3	MD	430031	B	EA	1	R1,3,2	1		81915	6 pcs.
28	NOMEX STRIP - .010" THICK	MB	430064	*		ICB HAS					
29	FACE PLATE FOR MCBXA CORRECTOR LEADS	MD	430083	A	EA	1	R1,3,3	1		82368	5 pcs.
30	CORRECTOR WIRE CHANNEL BLOCK	MB	430091	*	EA	2	R2,2,2	2		82010	5 pcs.
31	CORRECTOR WIRE SPLICE CLAMP COVER	MB	430092	*	EA	2	R2,2,3	2		81778	5 pcs.

TD - Engineering Fabr tion Component Kit List

	Description	Dwg Size	Number	Rev	Unit	Quantity Required	Location	Quantity Issued	E&F Verified	Routing Form Number	Spares Number / Comment
32	CENTER CABLE INSULATOR - BOTTOM	MC	430110	*	EA	1	R2,2,2	1		82013	14 pcs.
33	MCSOX SPLICE PLATE MOUNTING BAR	MC	430128	A	EA	2	R2,2,3	2		82318	10 pcs.
34	MCSOX SPLICE PLATE MOUNTING RING	MC	430129	*	EA	1	R2,2,3	1		82144	6 pcs.
35	MCSOX CORRECTOR SPLICE FACE PLATE	MD	430130	C	EA	1	R1,1,2	1		82521	4 pcs.
36	NON-IP (LEAD END) CORRECTOR BUS BUNDLE BRACKET	MC	430134	~~B~~	EA	A 1	R2,2,3	1		82610	4 pcs. ~~APR~~
37	CORRECTOR COIL FACE PLATE CLAMP	MB	430135	*	EA	1	R2,2,3	1		81967	6 pcs.
38	HARNESS BLOCK	MB	430144	*	EA	2	IB4 Bin	2		82152	12 pcs.
39	INSULATED EXPANSION LOOP TAIL	MB	430145	*	EA	1	ICB Has				
40	VOLTAGE TAPS SPLICE BLOCK	MC	430146	*	EA	1	R1,1,3	1		82314	7 pcs.
41	Q3 LE UPPER SUSPENSION BRACKET WELDMENT	MC	430159	A	EA	1	R1,3,2	1		82498	7 pcs.
42	Q3 LE LOWER SUSPENSION BRACKET WELDMENT	MD	430160	A	EA	1	R1,3,2	1		82499	7 pcs.
43	SIDE CABLE CLAMP ASSEMBLY	MC	430103		EA	2	R1,3,3	2		82012	12 pcs.
44	CORRECTOR EXPANSION LOOP BUS CLAMP	MB	430168	*	EA	2	R1,1,3	2		82626	14 pcs.
45	CONNECTOR, PANDUIT CRIMP SPLICE TYPE 16-22 WIRE GAUGE	FERMI STOCK	#1110-0550	*	EA	10	ICB Has				
46	TAPE, ELECTRICAL, GLASS CLOTH "3M SCOTCH #27" 1/2"	FERMI STOCK	#1130-2050	*		A / R					
47	MQSX CORRECTOR MAGNET	CERN	SUPPLIED	*		ICB HAS					
48	MCSOX CORRECTOR MAGNET	CERN	SUPPLIED	*		ICB HAS					
49	MQSXA CORRECTOR MAGNET	CERN	SUPPLIED	*		ICB HAS					
50	Q3 INSTRUMENTATION WIRE FEEDTHRU ASSEMBLY	MB	430074	*		ICB HAS					
51	NON-IP END BUS CROSSOVER BLOCK ASSEMBLY	MD	430081	A	EA	1	R1,2,5	1		82624	7 pcs.

ORIGINAL

TD - Engineering Fabr tion Component Kit List

	Description	Dwg Size	Number	Rev	Unit	Quantity Required	Location	Quantity Issued	E&F Verified	Routing Form Number	Spares Number / Comment
52	IP END BUS CROSSOVER BLOCK ASSEMBLY	MD	430095	B	EA	1	R8,S2,L4	1		82625	8 pcs.
53	Q3 NON-LEAD END (NON-IP END) SPIDER ASSEMBLY	MB	430096	A	EA	1	R1,1,1	1		82581	5 pcs.
HYPERTRONICS CONNECTOR ASSEMBLY 28 UNITS - Q3 MAGNET (LEAD END)		MB	418118	*	EA	1	Place part #'s 54-63 in one bag and label as MB-418118				
54	28 UNIT MALE (PIN) RACK	MA	418106	A	EA	1	R1,S1,L2	1		N/A	6 pcs.
55	TIE-DOWN LINK	MA	418109	*	EA	4	R1,1,2	3		(1) NA (2) 79854	41 pcs. APR
56	CLAMPING BAR	MA	418112	*	EA	1	IB4 Bin	1		79815	13 pcs.
57	GROMMET	MA	418113	*	EA	1	IB4 Bin	1		N/A	12 pcs.
58	THREADED STUD ASSEMBLY	MA	418114	*	EA	4	IB4 Bin	4		81575	63 pcs.
59	SUPPORT ARM WELDMENT (28 UNIT)	MC	418115	*	PAIR	1	IB4 Bin	1 pr		80120	7 pcs.
60	SCREW - #6-32 X 3/8 LG.	MA	418116	*	EA	4	R1,1,2	4		79892	40 pcs.
61	SCREW - #4-40 X 1/2 LG.	MA	418117	*	EA	4	R1,1,2	4		79891	116 pcs.
62	ANTI-ARC KAPTON	MA	418143	*	EA	17	R1,1,2	17		N/A	1243 pcs.
63	CONNECTOR COVER & ACCESS COVER (28-UNITS)	MC	418067-A2	*	PAIR	1	R1,1,2	1		N/A	5 pcs.
HYPERTRONICS CONNECTOR ASSEMBLY 23 UNITS - Q3 MAGNET (RETURN END)		MB	418132	*	EA	1	Place part #'s 64-69 in one bag and label as MB-418132				
64	CLAMPING BAR	MA	418112	*	EA	1	IB4 Bin	1		79815	13 pcs.
65	GROMMET	MA	418113	*	EA	1	IB4 Bin	--		N/A	APR 12 pcs. APR
66	THREADED STUD ASSEMBLY	MA	418114	*	EA	4	IB4 Bin	4		81575	63 pcs.
67	SCREW - #6-32 X 3/8 LG.	MA	418116	*	EA	4	R1,1,2	4		79892	40 pcs.
68	23 UNIT FEMALE (PIN) RACK	MA	418136	A	EA	1	R1,S1,L2	1		N/A	3 pcs.
69	CONNECTOR COVER & ACCESS COVER (23-UNITS)	MC	418067-A	A1	PAIR	1	R1,1,2	1		N/A	3 pcs.

ORIGINAL

TD - Engineering Fabr tion Component Kit List

	Description	Dwg Size	Number	Rev	Unit	Quantity Required	Location	Quantity Issued	E&F Verified	Routing Form Number	Spares Number / Comment
Q3 LEAD END (IP END) SPIDER ASSEMBLY		MD	430072	A	EA	1					
70	SHCS #8-32 x .75 LG. S.S.	MA	393071	*	EA	4	IB4 Bin	4		81436	60 pcs.
71	WASHER, NARROW, FLAT #6 S.S.	MA	393088	*	EA	2	IB4 Bin	2		81361	446 pcs.
72	HEX NUT #6-32 UNC-2B S.S.	MA	393089	*	EA	2	IB4 Bin	2		82599	142 pcs.
73	SHCS #6-32 UNC-2A x .625 LG S.S.	MA	393264	*	EA	4	IB4 Bin	4		82600	126 pcs.
74	SHCS #6-32 UNC-2A x 1.25 LG S.S.	MA	393266	*	EA	2	IB4 Bin	2		81107	76 pcs.
75	(Q3) MODULE ASSEMBLY BUS SPIDER ASSEMBLY	MD	430044	C	EA	1	IB4 Bin	1		81469	13 pcs.
76	BUS SPIDER HOUSING - BOTTOM	MB	430055	B	EA	1	IB4 Bin	1		82766	5 pcs.
77	BUS SPIDER HOUSING - COVER PLATE	MB	430073	*	EA	1	IB4 Bin	1		81455	6 pcs.
78	SPIDER BUMPER	MB	430075	B	EA	2	IB4 Bin	2		81447	118 pcs.
79	SPIDER BUS HOUSING COVER - THIN	MB	430176	*	EA	1	R2,2,2	1		82705	7 pcs.
80	INSULATED BEAM TUBE	MD	369838	A	EA	1	ICB				4 pcs.
81	MCBX CORRECTOR MOUNTING RING	ME	390037	C	EA	1	P/N	1		80790	7 pcs.
82	MQXA (Q1&Q3) INTERFACE SPECIFICATION	ME	390108	E	-	ICB HAS					
83	MQSXA CORRECTOR MOUNTING RING	MD	390209	C	EA	1	P/N	1		80791	6 pcs.
84	IP END DOME ASSEMBLY	ME	390221	C	EA	1	P/N	1		78710	6 pcs.
85	MCBX CORRECTOR MTG FLAT WASHER	MB	390228	*	EA	12	IB4 Bin	1		82993	APR
86	1/2"-20 UNF X 2.0" LG. SILVER PLATED SCREW FOR Q1/Q3 MQSXA	MA	390246	*	EA	8	IB4 Bin	8		74618	127 pcs.
87	1/2"-20 UNF X 3.0" LG. SILVER PLATED SCREW FOR Q1/Q3 MCBX	MA	390247	*	EA	4	IB4 Bin	4		74622	47 pcs.
88	MQSXA CORRECTOR TRANSPORTATION RING ADJUSTMENT SCREW	MB	390270	A	EA	4	IB4 Bin	4		76665	32 pcs.

ORIGINA

TD - Engineering Fabr' 'ion Component Kit List

	Description	Dwg Size	Number	Rev	Unit	Quantity Required	Location	Quantity Issued	E&F Verified	Routing Form Number	Spares Number / Comment
89	(BEAM TUBE) COLD BORE FLANGE	MC	390300	B	EA	2	R10,1,2	2	[illegible]	77028	30 pcs.
90	MCBX CORRECTOR MAGNET WELDMENT	MD	390312	*		ICB HAS					
91	SHIM, 0.05mm (.002")	MA	390482	*	EA	8	R2,S2,L4	8	[illegible]	79123	65 pcs.
92	SHIM, 0.13mm (.005")	MA	390483	*	EA	8	R2,S2,L4	8	[illegible]	79124	72 pcs.
93	SHIM, 0.25mm (.010")	MA	390484	*	EA	8	R2,S2,L4	8	[illegible]	79125	55 pcs.
94	SHIM, 0.38mm (.015")	MA	390485	*	EA	8	R2,S2,L4	8	[illegible]	79126	43 pcs.
95	Q3 A34B4 (MCSOX) CORRECTOR MOUNTING RING	ME	390664	*	EA	1	R1,S3,L3	1	[illegible]	80927	6 pcs.
96	BODY TUBE EXTENSION WELD BACKING RING	MC	390666	*	EA	1	R7,3,4	1	[illegible]	80910	6 pcs.
97	NON-IP END BODY TUBE EXTENSION WELDMENT	MD	390667	*	EA	1	Site 38	1	[illegible]	81846	6 pcs.
98	Q3 COLDMASS NON-IP END DOME WELDMENT - MODIFIED	MD	390668	*	EA	1	Site 38	1	[illegible]	81847	6 pcs.
99	Q1 & Q3 COLD MASS FIDUCIAL MOUNTING BLOCK	MB	390808	*	EA	2	R1,1,3	2	[illegible]	82260	16 pcs.
100	NO. 10 (.190") - 32UNF X .188" LG. CUP POINT SET SCREW; 18-8 SST	MA	393030	*	EA	8	IB4 Bin	8	[illegible]	82379	154 pcs.
101	A34B4 CORRECTOR MAGNET (MCSOX CORRECTOR MAGNET)		Item #12 on ME-390529	*		ICB HAS					
102	MQSXA CORRECTOR MAGNET		Item #9 on ME-390529	*		ICB HAS					

ADDITIONAL PARTS REQUEST

ADDITIONAL PARTS REQUEST FORM SHALL BE USED TO ACCESS ALL ITEMS FROM INVENTORY WITH THE EXCEPTION OF PARTS KITS.

THIS FORM MUST BE SIGNED BY AN ACQUISITIONER BEFORE BRINGING TO THE STOCKROOM

MAGNET OR COIL # *LQXC-04*

DATE REQUESTED *5-10-05*

BUDGET CODE *300/1.1.1.3.4*

JOB TICKET # _____

MACHINE SHOP REQ. # _____

PURCHASE RELEASE # _____

REQUESTED BY *Damon Bice*

DELIVER TO *P/U*

NEED BY DATE *5-10-05*

MMR # _____

PO # _____

OTHER _____

PARTS STATUS (CHECK ONE)

- ☐ DEFECTIVE PARTS ISSUED
- ☐ PARTS SCRAPPED
- ☐ A/R ITEMS
- ☐ DEFECTIVE ASSEMBLY
- ☒ MISSING FROM KIT ALREADY ISSUED
- ☐ INDIVIDUAL PARTS
- ☐ CONSUMABLES
- ☐ PARTS LOST

ACQUISITIONER SIGNATURE [signature] **ID#** 4223 **DATE** 5/10/05

PLEASE INDICATE REVISION REQUIRED

Stock 97

LOCATION	PART #	REV	QTY	DESCRIPTION	RF #	SIR #
IB#4 BIN	*MB 390228*		*11*	*Corrector ring washer*	83034	

RECEIVED MAY 10 2005 MATERIAL CONTROL/IB4

COPY

STOCKROOM SIGNATURE [signature] **ID#** 12304 **DATE** 5/10/05

PARTS DELETED FROM DATABASE _____ **ID#** _____ **DATE** _____

A COPY OF THIS FORM IS TO BE INCLUDED IN WITH THE TRAVELER

PARTS RECEIVED BY O. Fuiano **ID#** 13492 **DATE** 5/10/05

Revision Request Control Number: 1751

Specification Number: 5520 - TR - 333729 Current Revision: C

Traveler or Document Title LHC Q3 LMQXC Module Assembly Traveler

Step #/Description of Revision:

3.0 Modified Step. Changed title.
4.0 Added Step. Added steps per production request.
7.13 Removed Step. "Disassemble the MCBXA Corrector Magnet from the MCBXA Corrector Mounting Ring (ME-390037)." Per production request.
7.21 Removed Step. "Disassemble the MQSX Corrector Magnet from the MQSX Corrector Mounting Ring (MD-309209)." Per production request.
8.1 Removed Step. "Move the MQSX Corrector Magnet up against the Mounting Ring on the Q3 Cold Mass and bolt the MQSX Corrector Magnet to the Q3 Cold Mass using the Silver Plated Mounting Screw and torque bolts to 500 in.-lbs. Shim between the corrector and flange as necessary." Per production request.
8.2 Modified Step. Moved to after step 7.18. (New step 8.19)
8.4 Removed Step. "Solder Corrector Wires per Q3 Module Assembly (ME-369900) and as shown in Figure 8.5-A."
9.0 Changed Title to Final Corrector Preparations. per production request. (New Step 10.0.)
9.1 Modified Step. Removed "Move the MCBXA Corrector Magnet up against the Mounting Ring on the Q3 Magnet, and bolt the MCBXA Corrector Magnet to the Q3 Cold Mass using the 3" Silver Plated Mounting Screw (MA-390247) and " from step per production request. (New Step 10.1)
10.0 to 25.0 Modified Steps per production request and marked-up traveler.

John Szostak	Jim Rife	7/8/2005
Originator	Responsible Authority	Date

Revision Incorporated into the Traveler:

John Szostak	7/13/2005
Revision Incorporated By	Date

Process Engineering Final Review:

Bob Jensen	7/13/2005
Process Engineering/Designee	Date

Instructions for the completion of the Revision Request Form

Note(s):

Multiple steps may be effected by one Revision Request Form but only one specific Traveler or Document may be effected by each Revision Request Form.

If completing this form by hand, a Revision Request Control Number must be obtained before processing.

If completing this form entirely by electronic means, the printed copy to be filed in the Process Engineering Office is to be initialed by the individual incorporating the Revision Request and the individual who reviewed the Traveler or Document.

Originator Instructions:

1) Specification Number: - Enter the Specification Number of the Traveler or Document to be revised. (Document title is inserted automatically from the spec. #)

2) Current Revision: - Enter the Revision of the Traveler or Document to be revised.

3) Step# / Description of the Revision: - Enter a description of the revision to be made and the step# it applies to, if applicable. If needed to describe the revision attach a copy of the page(s). If the revision is coming from a related document such as a Discrepancy Report or an Engineering Order attach a copy of that document to the Revision Request Form.

4) Originator: - Originator is the person generating the form. (Select Name from List)

5) Responsible Authority: - Responsible Authority is person responsible for the process in question. (Select Name from List)

Process Engineering Office Instructions:

1) Revision Incorporated into the Traveler: - Signature of the individual who incorporated the revision.

2) Process Engineering Final Review: - Review the Traveler or Document revised, sign and date the form. The original completed Revision Request Form will be retained by the Process Engineering Office in the Revision Request Binder.

Traveler Title:	Specification No:	Revision:	DR No:
LHC Q3 LMQXC Module Assembly Traveler	333729	B	4278

Step No:	Drawing No:	Routing Form No:	Serial No:	Rework ID:
21.4	390529		LMQXC04	0

Discrepancy Description:

The 5L lead failed it's hipot at 2167 Volts. It was an arc failure. The 5U Lead is also a dead short to ground.

Originator: Steve Gould

Date: 8/2/2005 9:05:43 AM

Cause of Nonconformance:

Most likely damaged insulation during extension tube installation as it has a weld backing strip that may have scuffed/rubbed against the bus.

Responsible Authority: Fred Nobrega

Date: 8/2/2005 2:49:39 PM

Disposition:

Determine which end the short is on using 4-wire measurement and remove corresponding end dome. Locate and repair the short. (Issued 333729 LMQXC04-1 Step 20.0 & 21.0 (Cold Bore and Hipot of Cable Busses) per production request. -John Szostak 8/8/05) (333729, Rev. B Steps 18.6 (IP End) and 18.14 (Non-IP End) were not re-issued to show re-welding of removed End Dome. John Szostak 11/8/05)

Responsible Authority: Fred Nobrega

Date: 8/2/2005

Corrective Action to Prevent Recurrence:

Perform an additional hi pot test prior to welding the end domes to the extension tubes to verify insulation integrity.
Disposition verify notes: Step 20.18 Rev. E Additional Hipot added. (TRR No. 1766)

Responsible Authority: Fred Nobrega

Date: 8/2/2005

Corrective Action/Disposition Verified By: John Szostak

Date: 11/8/2005 12:28:59 PM

Will Configuration be affected?: ☐ YES ☑ NO

Identified problem area:

☐ Material ☐ Manpower ☑ Method ☐ Machine ☐ Measurement

Reviewed By: Bob Jensen

Date: 11/10/2005

Traveler Title:	Specification No:	Revision:	DR No:
LHC Q3 LMQXC Module Assembly Traveler	333729	B	4208

Step No:	Drawing No:	Routing Form No:	Serial No:	Rework ID:
10.7	430065		LMQXC04	0

Discrepancy Description:

While evaluating correct wiring procedures of the MCSOX corrector, it was observed that the entire magnet/corrector bus was built incorrectly.

Originator: Damon Bice

Date: 5/19/2005

Cause of Nonconformance:

Technician Error. Bus was built with the Corrector and Lead sides reversed.

Responsible Authority: Rodger Bossert

Date: 9/1/2005 9:18:33 AM

Disposition:

Remove bus and replace with new bus built to correct configuration. (Re-issued TR-333729 LMQXC04-1 per production request. - John Szostak 6/27/05)

Responsible Authority: Rodger Bossert

Date: 9/1/2005

Corrective Action to Prevent Recurrence:

Add step to Traveler to verify Bus configuration is per Drawing ME-430065. (TRR No. 1766)

Responsible Authority: Rodger Bossert

Date: 9/1/2005

Corrective Action/Disposition Verified By: John Szostak

Date: 9/12/2005 3:11:02 PM

Will Configuration be affected?: ☐ YES ☑ NO

Identified problem area:

☐ Material ☐ Manpower ☑ Method ☐ Machine ☐ Measurement

Reviewed By: Bob Jensen

Date: 9/13/2005

Traveler Title: LHC Q3 LMQXC Module Assembly Traveler

Specification No: 333729

Revision: B

DR No: 4206

Step No: 7.14

Drawing No: ME-369900

Routing Form No:

Serial No: LMQXC04

Rework ID: 0

Discrepancy Description:

During the splicing of cold mass voltage taps to instrumentation bus, voltage tap wire EE 8223 was accidentally severed.

Originator: Damon Bice

Date: 5/12/2005

Cause of Nonconformance:

The corrector coil voltage tap wire EE8223, which is not to be spliced, is part of a bundle of wires that are to be spliced. Technician was unaware of this when preparing (cutting) the bundle for splicing (it was his first time performing this task).

Responsible Authority: Andy Hocker

Date: 5/18/2005

Disposition:

Severed wire EE8223 was butt-spliced back together.

Responsible Authority: Andy Hocker

Date: 5/18/2005

Corrective Action to Prevent Recurrence:

Technician will separate out the "not-to-be-spliced" wires from the bundle before prepping.

Responsible Authority: Andy Hocker

Date: 5/18/2005

Corrective Action/Disposition Verified By: Bob Jensen

Date: 5/19/2006 3:12:00 PM

Will Configuration be affected?: ☐ YES ☑ NO

Identified problem area:

☐ Material ☐ Manpower ☑ Method ☐ Machine ☐ Measurement

Reviewed By: Bob Jensen

Date: 5/19/2006