Document ID:

8010

LHC Q3 LQXC Cryostat Final Assembly Traveler

333730 / Rev. C

Job No: **248**

E + F Project/Task No.: **300/1.1.1.6.2**

M + S Project/Task No.: **300/1.1.1.6.2**

Place This Side Down For Scanning!!!

Magnet Travelers

LQXC05-0

Document ID:

8010

Job No.:

248

Project/Task No.

300/1.1.1.6.2

Series:

LQXC

Serial No:

LQXC05

Rework ID:

0

Specification No.:

333730

Revision:

C

LQXC05-0

Fermi National Accelerator Laboratory
Batavia, IL 60510

LARGE HADRON COLLIDER
Q3 - LQXC
CRYOSTAT FINAL ASSEMBLY TRAVELER

Reference Drawing(s):
Q3 Cryostat General Assembly (ME-390132)
Q3 Cryostat Assembly Internal Piping (ME-390213)

Project/Task Number:

Released By: *John Szostak* **Magnet/Device Series:** *LQXC*

Date Issued: *7/11/2005 1:26:07 PM* **Scanned Pages:** 46

Prepared by: J. Szostak

Title	Signature	Date
TD / E&F Process Engineering	*Jamie Blowers* Bob Jensen / Designee	5/25/05
TD / LHC Production Supervisor	*Steve Gould* Jim Rife / Designee	5/25/05
TD / LHC Production Engineer	*Rodger Bossert* Rodger Bossert / Designee	5/25/05
TD / LHC Project Engineer Cryostat	*Tom Nicol* Tom Nicol / Designee	5/25/05
TD / LHC Project Physicist	*Andy Hocker* Michael Lamm / Designee	5/25/05
TD / LHC Program Manager	*Jim Kerby* Jim Kerby / Designee	5/26/05

Revision Page

Revision	Step No.	Revision Description	TRR No.	Date
None	N/A	Initial Release	N/A	9/10/04
A	4.4	Modified Step. Changed Qty of Pipe Supports (MD-390092) from 2 to 3 per LQXC01.	1689	12/15/04
	5.1	Added Step. "Install the Threaded Rods (Tie Rod Assembly) (MC-390638). See copy of step 19.9 (Q3 Module Assembly Traveler, TR-333729) in designated book, for the distance between the Suspension Rings. Record the previously recorded measurements below." per TR-333730, LQXC01 and Tom Page.		
	5.8	Moved Step. "Install the Cold Mass Insulation Mounting Lug Blankets (MC-390496)." per TR-333730, LQXC01 and Tom Page. New Step 5.2.		
	5.10	Modified Step. Added "Ensure the shield is not sagging prior to the final tightening of the shield screws." New Step 5.11. **DR No. HGQ-0509.**		
	7.2	Modified Step. Added Picture of Corrector Bus Leads. Modified Table.		
B	1.6	Added Step. "Protect the bellows during all stages of production." **DR No. HGQ-0500.**	1711	5/19/05
	3.4	Modified Step. Changed to "Attach the Leak Check sticker for the Vacuum Vessel Assembly (ME-390133) per ES-107240 to the table below." Per **DR No. HGQ-0469**.		
	4.0	Modified Step. Added, removed and re-arranged sequence of steps per marked up traveler from LHC Production Engineer.		
	4.41	Added Step. "Install the Fiducial Mounting Blocks (MB-390808) per Q3 Cold Mass Welded Assembly (ME-390529)."		
	4.42	Added Step. "Weld the Fiducial Mounting Blocks (MB-390808) per Q3 Cold Mass Welded Assembly (ME-390529)."		
	4.45	Modified Step. Added more Leak Check boxes for all three 4.5k Intercept Line Leak Checks. Added picture showing locations of each and numbering.		
	4.46	Added Step. "Leak check the Cooldown Line (MD-390225)." per production request.		
	4.47	Added Step. "Leak check the Pumping Line (MB-390224)." per production request.		
	4.66	Modified Step. Added pictures showing each of the three 4.5k Intercept Lines (MB-390226).		
	4.67	Added Step. "Leak check the Cooldown Line (MD-390225)."		
	4.68	Added Step. "Leak check the Pumping Line (MB-390224)."		
	8.5	Removed Step. "Install the Vinyl Flange Covers (MA-390491), (MA-390492), (MA-390493), (MA-390494), & the Alignment Fiducial Covers (MA-390495)." Moved to Shipping Traveler per production request.		
	8.5	Added Step. "Perform a pressurized Leak Check of the Cryostat Assembly." Per LQXC02.		
C	7.1	Modified Step. Modified Electrical Table. Removed "Voltage Tap Serial Numbers".	1742	5/25/05
	8.5	Modified Step. "Perform a pressurized Helium Leak Check of the Cryostat Assembly."		
	8.6	Added Step. "Ensure all Pipe Supports are in place." Per LHC Project Engineer Cryostat.		
	8.7	Added Step. "Perform a Final Stretched Wire measurement." Per TR-333755 - LQXA04.		
	8.8	Added Step. "Perform a Final Cryostat Pipe Survey measurement." Per TR-333755 - LQXA04.		

Ensure appropriate memos and specific instructions are placed with the traveler before issuing the sub traveler binder to production.

1.0 General Notes

1.1 All steps that require a sign-off shall include the Technician/Technician(s)s first initial and full last name.

1.2 No erasures or white out will be permitted to any documentation. All incorrectly entered data shall be corrected by placing a single line through the error, initial and date the error before adding the correct data.

1.3 All Discrepancy Reports issued shall be recorded in the left margin next to the applicable step.

1.4 Personnel shall perform all tasks in accordance with current applicable ES&H guidelines and those specified within the step.

1.5 Cover the product/assembly with Green Herculite (Fermi stock 1740-0100) when not being serviced or assembled.

1.6 Protect the Bellows during all stages of production.

2.0 Parts Kit List

2.1 Attach the completed Parts Kit for this production operation to this traveler. Ensure that the serial number on the Parts Kit matches the serial number of this traveler. Verify that the Parts Kit received is complete.

Process Engineering/Designee

Date 7/14/05

3.0 Vacuum Vessel Preparation and Painting

3.1 Record the Vacuum Vessel Serial Number.

Q3-3

S Gould
Technician(s)

9/29/05
Date

3.2 Inspect the transition area between the Support Sections and Tube Sections. Grind smooth if necessary.

S Gould
Technician(s)

9/29/05
Date

3.3 Clean the Vacuum Vessel (ME-390133) using a vacuum cleaner or equivalent.

S Gould
Technician(s)

8/15/05
Date

3.4 Attach the Leak Check sticker for the Vacuum Vessel Assembly (ME-390133) per ES-107240 to the table below.

Part No.		DETERMINATION OF DETECTABLE LEAK						
PART NO. 390133D		SCALE UNITS BEFORE HELIUM PROBE	SCALE UNITS WHILE ENCLOSURE FLOODING	Q3-3 DETERMINATION OF MINIMUM DETECTABLE LEAK				
DATE TIME	OPERATOR'S LAST NAME			MDS	((Response	Bckgnd)	Leak Value)	MDL
12.6.02	[illegible]	13	13	2	260	13	4.75E-8	3.85E-10

S Gould
Inspector

9/29/05
Date

3.5 Prepare the outside of the Vacuum Vessel (ME-390133) for painting. Clean using Ethyl Alcohol (Fermi stock 1920-0550) and Kimwipes (Fermi stock 1660-2500) or equivalent.

ED _____ Technician(s) 8/16/05 Date

3.6 Mask the Stainless Steel Components of the Vacuum Vessel for painting.

ED _____ Technician(s) 8/16/05 Date

3.7 Prime the Vacuum Vessel using Rust-o-leum (Fermi stock 1825-4000).

ED _____ Technician(s) 8/16/05 Date

3.8 Verify that the Screws (MA-393036) will thread easily into the appropriate holes in the Vacuum Vessel (ME-390133). If necessary, tap out holes with M10 – 1.5 Tap. Move Vacuum Vessel (ME-390133) to Table.

_____ Lead Person 9/29/05 Date

3.9 Paint the Vacuum Vessel using Flambeau Red (Fermi stock 1825-3710).

_____ Technician(s) 9/28/05 Date

4.0 Piping Assembly

Note(s):

Do not use a Strap Wrench on the Pipes.

4.1 Place the Cold Mass Assembly on the Insertion Rail System.

Technician(s) _____ Date 9/28/05

4.2 Clean the Pipe Supports with Ethyl Alcohol (Fermi stock 1920-0550) and Kimwipes (Fermi stock 1660-2500) or equivalent.

Technician(s) _____ Date 9-29-05

4.3 Install Cold Mass Insulation per Q3 Cold Mass Magnet Insulation Installation (ME-390527).

Technician(s) _____ Date 9-29-05

4.4 Install the Pipe Supports (MD-390092) (Qty. 3) on the Cold Mass per Q3 Cryostat Assembly Internal Piping (ME-390213).

Note(s):

A Tie Bar may be disconnected, if necessary, from the Fixed Support Assembly to install the central two pipe supports.

PIPE SUPPORT ASSEMBLY

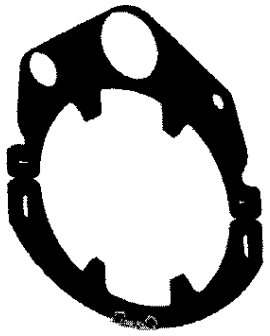

Technician(s) _____ Date 9-29-05

4.5 Install Pipe Anchor (MC-390486) on the Cold Mass per Q3 Cryostat Assembly - Internal Piping (ME-390213).

Technician(s) _____ Date 9-30-05

4.6 Using Pipe Supports (MD-390092) as a template, cut the blankets around the Pipe Support Feet and slit blankets circumferentially at the Pipe Supports.

Technician(s) _____ Date 9-30-05

4.7 Remove Pipe Supports (MD-390092), Pipe Anchor (MC-390486) and blankets. Wrap blankets in plastic bag to keep clean for later use. Label blankets as they are removed for later positioning.

Technician(s) _____ Date 9-30-05

4.8 Install Pipe Supports (MD-390092) and Pipe Anchor (MC-390486) to same locations as in step 4.4 and 4.5 respectively.

Technician(s) _____ Date 9-30-05

4.9 Clean the Cold Mass and the Retainer Clips (MA-390103) with Ethyl Alcohol (Fermi stock 1920-0550) and Kimwipes (Fermi stock 1660-2500) or equivalent.

Technician(s) _____ Date 9-30-05

4.10 Weld the Retainer Clips (MA-390103) to the Cold Mass Outer Shell as per the Q3 Cryostat Internal Piping Assembly (ME-390213).

Weldor(s) _____ Date 9/30/05

4.11 Install Q3 Installation Tie Rod Assembly (MC-390638) and Tie Bar Retaining Clamp (MB-390136) as per Q3 Cryostat Internal Piping Assembly (ME-390213).

Technician(s) _____ Date 9-30-05

4.12 Clean the Q3 Heat Exchanger Outer Shell (MD-390385), Q3 Pumping Line (MB-390224) and the Q3 Cool Down Line (MB-390225) with Ethyl Alcohol (Fermi stock 1920-0550) and Kimwipes (Fermi stock 1660-2500) or equivalent.

Technician(s) _____ Date 9-30-05

4.13 Clean the Pumping Line End Flange (MB-390032), the Cool Down Line End Flange (MB-390033) and the Heat Exchanger Corrugated Tube Flange (MB-390030) with Ethyl Alcohol (Fermi stock 1920-0550) and Kimwipes (Fermi stock 1660-2500) or equivalent.

Technician(s) _____ Date 9-30-05

4.14 Slide the Heat Exchanger Outer Shell (ME-390215) through all five supports.

Note(s):

Ensure the cross over hole in the Heat Exchanger Pipe is lined up with the elbow on the End Dome.

Technician(s) _____ Date 9-30-05

4.15 Position the Q3 Pipe Anchor (MC-390486).

Technician(s) _____ Date 9-30-05

4.16 Position the Heat Exchanger Weld Connector Adapter (MC-390278).

Technician(s) _____ Date 9-30-05

4.17 Position the Heat Exchanger Outer Shell Pipe (ME-390215).

Technician(s) _____ Date 9-30-05

4.18 Clean the Non-IP End of the Heat Exchanger Corrugated Tube (MC-390217) and the Non-IP End Inner Tube Adapter (MC-390658).

Technician(s) _____ Date 7-11-05

4.19 Weld the Non-IP End Inner Tube Adapter (MC-390658) to the Heat Exchanger Corrugated Tube (MC-390217) per Q3 Heat Exchanger Corrugated Tube Weldment (ME-390395).

William E Garfield
~~Technician(s)~~ WELDER _____ Date 7-11-05

4.20 Perform a Leak Check on the Non-IP End Inner Tube Adapter (MC-390658) and the Heat Exchanger Corrugated Tube (MC-390217) open. Done in one leak

Part No. inner tube adapter corrugated tube	DETERMINATION OF DETECTABLE LEAK						
	M.D.S. ÷ ((Response – Background) ÷ Leak value) = MDL						
OPERATOR'S LAST NAME	SCALE UNITS BEFORE HELIUM PROBE	SCALE UNITS WHILE ENCLOSURE FLOODING	MDS	Response	Background	Leak Value	MDL
Wilson	66X1	66X1	2	60X5	66X1	3.91 xE-8	3.34 xE-10

Part No.	DETERMINATION OF DETECTABLE LEAK						
	M.D.S. ÷ ((Response – Background) ÷ Leak value) = MDL						
OPERATOR'S LAST NAME	SCALE UNITS BEFORE HELIUM PROBE	SCALE UNITS WHILE ENCLOSURE FLOODING	MDS	Response	Background	Leak Value	MDL
						____ xE-8	____ xE-__

Inspector 7-12-05 Date

4.21 Assemble the Q3 Heat Exchanger Corrugated Tube Assembly (ME-390216).

Technician(s) 9-30-05 Date

4.22 Insert the Q3 Heat Exchanger Corrugated Tube Assembly (ME-390216).

Technician(s) 9-30-05 Date

4.23 Position Q3 Heat Exchanger Corrugated Tube Assembly (ME-390216).

Technician(s) 9-30-05 Date

4.24 Position the Heat Exchanger Flat End Cap (MD-390178).

Technician(s) _____ Date 9-30-05

4.25 Purge the Assembly using Argon (Ar) gas.

Technician(s) _____ Date 10-1-05

4.26 Tack weld the Heat Exchanger Weld Connector Adapter (MC-390278) to the Heat Exchanger Outer Shell (ME-390215).

Note(s):

DO NOT WELD THE HEAT EXCHANGER INNER TUBE TO THE END CAP!!!

Weldor(s) _____ Date 10-1

4.27 Tack weld the Heat Exchanger Weld Connector Adapter (MC-390278) to the IP End Dome 90° Elbow (MC-390220 of Non-IP End Dome Weldment MD-390219).

Note(s):

DO NOT WELD THE HEAT EXCHANGER INNER TUBE TO THE END CAP!!!

Weldor(s) _____ Date 10-1

4.28 Tack weld the Heat Exchanger Flat End Cap (MD-390178) to the Outer Shell Weldment (MD-390385)

Note(s):

DO NOT WELD THE HEAT EXCHANGER INNER TUBE TO THE END CAP!!!

Weldor(s) _____ Date 10-1

4.29 Weld the Heat Exchanger Outer Shell Pipe (ME-390215) to the Heat Exchanger Weld Connector Adapter (MC-390278) as per Q3 Cryostat Assembly Internal Piping (ME-390213).

Weldor(s) _____ Date 10-1

4.30 Weld the IP End Dome 90° Elbow (MC-390220 of Non-IP End Dome Weldment MD-390219) to the Heat Exchanger Weld Connector Adapter (MC-390278) as per Q3 Cryostat Assembly Internal Piping (ME-390213).

DW
Weldor(s)

10-1
Date

4.31 Weld the Heat Exchanger Flat End Cap (MD-390178) to the Outer Shell Pipe (MD-390215) as per Q3 Heat Exchanger Outer Shell Weldment (ME-390385).

DW
Weldor(s)

10-1
Date

4.32 Position the Pipe Anchor on the Cold Mass per Q3 Cryostat Assembly Internal Piping (ME-390213).

Technician(s)

10-1-05
Date

4.33 Weld the Heat Exchanger Outer Shell Pipe (MD-390215) to the Pipe Support (MD-390092).

DW
Weldor(s)

10-1
Date

B.T. FLANGE → Spool FLANGE - 235
- 222.5
12.5

4.34 Determine the length of the Heat Exchanger Outer Shell Extension Spool (MD-390659). (Contact Responsible Authority for details, if necessary).

Technician(s)

10-1-05
Date

TP
Responsible Authority/Physicist

10/1/05
Date

4.35 Modify the Heat Exchanger Spool, if necessary.

Technician(s)

10/1/05
Date

4.36 Position Heat Exchanger Outer Shell Extension Spool (MD-390659).

Technician(s)

10/3/05
Date

4.37 Weld the Heat Exchanger Outer Shell Extension Spool (MD-390659) per Q3 Heat Exchanger Outer Shell Weldment (ME-390385).

Weldor(s)

10/3/05
Date

4.38 Position the Q3 Heat Exchanger Corrugated Tube Assembly (ME-390216) per Q3 Heat Exchanger Assembly (ME-390214).

Technician(s) _____ Date _____

4.39 Weld the Q3 Heat Exchanger Corrugated Tube Assembly (ME-390216) to the Outer Shell Weldment (ME-390385) as per Q3 Heat Exchanger Assembly (ME-390214).

Both X

Weldor(s) _____ Date 10-3-05

TRK 1805 SAME AS STEP 4.37

~~4.40 Weld the Heat Exchanger Outer Shell Extension Spool (MD-390659) per Q3 Heat Exchanger Outer Shell Weldment (ME-390385).~~

Weldor(s) _____ Date _____

4.41 Weld the Heat Exchanger Corrugated Tube Flange (MB-390030) to the Heat Exchanger Outer Shell (ME-390385) as per Q3 Heat Exchanger Assembly (ME-390214).

Weldor(s) _____ Date 10-29-05

4.42 Insert the Cooldown Line Tube (MC-390225).

Technician(s) _____ Date 10/28/05

4.43 Insert the Pumping Line Tube (MB-390224).

Technician(s) _____ Date 10/29/05

4.44 Position the Cooldown Line Tube (MB-390225).

Technician(s) _____ Date 10-31-05

4.45 Position the Pumping Line Tube (MB-390224).

SNG

Technician(s) _____ Date ~~7/11/05~~ SNC

4.46 Weld the Cooldown Line End Flange (MB-390033) to the IP End of the Q3 Cool Down Line (MB-390255) as per Q3 Cryostat Internal Piping Assembly (ME-390213).

Weldor(s) _____ Date ~~7-11-05~~ 10-1-05

4.47 Weld the Pumping Line Flange (MC-390032) to the IP End of the Pumping Line Tube (MB-390224) per Q3 Cryostat Internal Piping Assembly (ME-390213).

Weldor(s) _____ Date 10-1-05

4.48 Position the Cooldown Line Non-IP End Extension Spool (ME-390663).

Technician(s) _____ Date 10/1/05

4.49 Position the Pumping Line Non-IP End Extension Spool (ME-390650).

Technician(s) _____ Date 10/1/05

4.50 Weld the Cooldown Line Non-IP End Extension Spool (ME-390663) to the Cooldown Line Tube (MB-390225) per Q3 Cryostat Internal Piping Assembly (ME-390213).

Weldor(s) _____ Date 10-1-05

4.51 Weld the Pumping Line Non-IP End Extension Spool (ME-390650) to the Pumping Line Tube (MB-390224) per Q3 Cryostat Internal Piping Assembly (ME-390213).

Weldor(s) _____ Date 10-1-05

4.52 Position the Cooldown Line Tube (MB-390225) and the Pumping Line Tube (MB-390224) per Q3 Cryostat Internal Piping Assembly (ME-390213).

Technician(s) _____ Date 10-31-05

4.53 Purge the Cooldown Line Tube (MB-390225) and the Pumping Line Tube (MB-390224) and the Cold Mass with Argon Gas (Ar).

Inspector _____ Date 10-31-05

4.54 Weld the Cool Down Line (MC-390225) and the Pumping Line Tube (MB-390224) to the Q3 Pipe Anchor (MC-390486) as per Q3 Cryostat Assembly Internal Piping (ME-390213).

DW

Weldor(s) _____ Date 10-31-05

4.55 Weld the Q3 Pipe Anchor (MC-390486) to the Cold Mass Assembly (ME-390528) as per Q3 Cryostat Assembly Internal Piping (ME-390213).

DW

Weldor(s) _____ Date 10-31-05

4.56 Insert Q3 4.5k Intercept Line Tubes (MB-390226) as per Q3 Heat Exchanger Assembly (ME-390214).

Technician(s) _____ Date 10-31-05

4.57 Purge the Q3 4.5k Intercept Line Tubes (MB-390226).

Technician(s) _____ Date 10/31/05

4.58 Weld the 4.5k Intercept Line Non-IP End Extension Weldments (ME-390679) to the 4.5k Intercept Line Tubes (MB-390226) as per Q3 Cryostat Assembly Internal Piping (ME-390213).

B&C

Weldor(s) _____ Date 10-31-05

4.59 Ensuring that the Q3 4.5k Intercept Line Pipes (MB-390226) have been purged, weld the Intercept Line Pipe Stops (MA-390379) as per Q3 Cryostat Assembly Internal Piping (ME-390213).

B&C

Weldor(s) _____ Date 10-31-05

4.60 Install the Fiducial Mounting Blocks (MB-390808) per Q3 Cold Mass Welded Assembly (ME-390529).

Technician(s) _____ Date 12/15/05

4.61 Weld the Fiducial Mounting Blocks (MB-390808) per Q3 Cold Mass Welded Assembly (ME-390529).

Weldor(s) _____ Date 12/15/05

4.62 Prepare Cold Mass Assembly for Pressure Test at 363 psi.

Technician(s) _____ Date 10-31-05

4.63 Verify Cold Mass Assembly is ready for Pressure Test at 363 psi.

Responsible Authority/Physicist _____ Date 11/2/05

STOP

4.64 Perform a Pressure Test of the Cold Mass Assembly at 363 psi Nitrogen per Section 5034 of the Fermilab ES&H Manual and UG-100 of the Code.

Warning:

The test is to be performed after normal working hours and only personnel directly involved with the test will be present.

T. Page
Responsible Authority/Physicist

11/2/05
Date

4.65 Leak Check the Cold Mass Assembly. (This will include the Outer Shell (MD-390385)).

Part No. Cold Mass	DETERMINATION OF DETECTABLE LEAK						
	M.D.S. ÷ ((Response – Background) ÷ Leak value) = MDL						
OPERATOR'S LAST NAME	SCALE UNITS BEFORE HELIUM PROBE	SCALE UNITS WHILE ENCLOSURE FLOODING	MDS	Response	Background	Leak Value	MDL
Wilson	84X1	84X1	2	61X5	84X1	3.91 x E-8	3.53 x E-10

Inspector

11/10/05
Date

4.66 Leak check the three Q3 4.5k Intercept Lines (MB-390226).

Q3 IP END VIEW

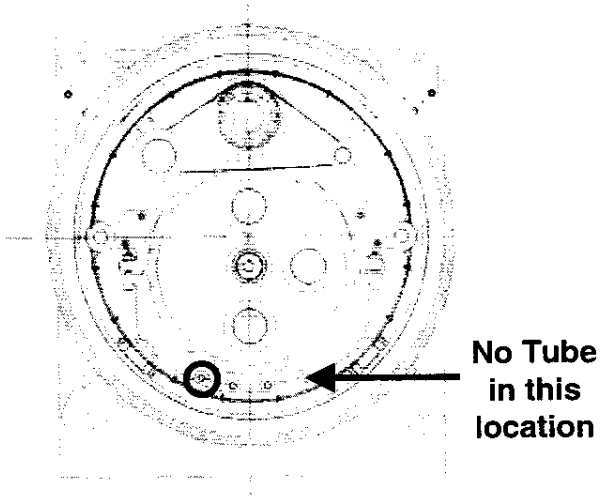

4.5k Intercept Line - #1

Part No. 4.5K intercept line #1	DETERMINATION OF DETECTABLE LEAK						
	M.D.S. ÷ ((Response – Background) ÷ Leak value) = MDL						
OPERATOR'S LAST NAME	SCALE UNITS BEFORE HELIUM PROBE	SCALE UNITS WHILE ENCLOSURE FLOODING	MDS	Response	Background	Leak Value	MDL
Wilson	45X1	45X1	2	64X5	45X1	3.91 x E-8	2.84 x E-10

Q3 IP END VIEW

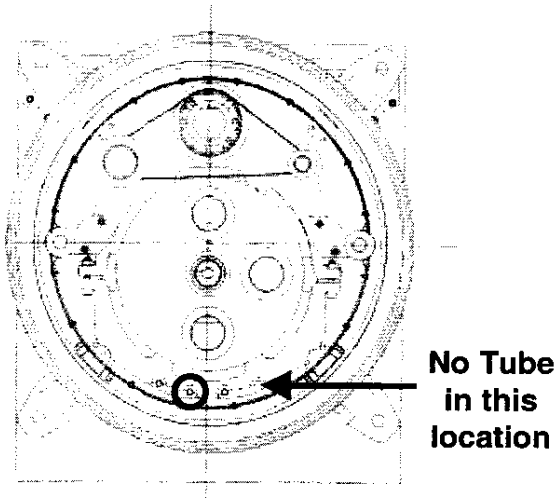

4.5k Intercept Line - #2

Part No. #2	DETERMINATION OF DETECTABLE LEAK						
	M.D.S. ÷ ((Response – Background) ÷ Leak value) = MDL						
OPERATOR'S LAST NAME	SCALE UNITS BEFORE HELIUM PROBE	SCALE UNITS WHILE ENCLOSURE FLOODING	MDS	Response	Background	Leak Value	MDL
Wilson	42X1	42X1	2	63X5	42X1	3.91 x E^{-8}	2.86 x E^{-10}

Q3 IP END VIEW

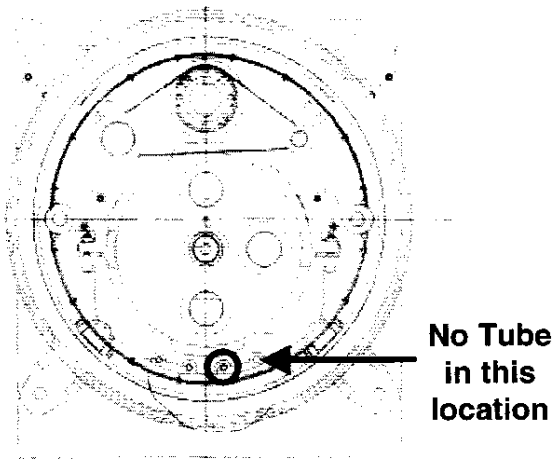

4.5k Intercept Line - #3

Part No. #3	DETERMINATION OF DETECTABLE LEAK						
	M.D.S. ÷ ((Response – Background) ÷ Leak value) = MDL						
OPERATOR'S LAST NAME	SCALE UNITS BEFORE HELIUM PROBE	SCALE UNITS WHILE ENCLOSURE FLOODING	MDS	Response	Background	Leak Value	MDL
Wilson	43x1	43x1	2	44x5	43x1	3.91 x E-8	2.62 x E-10

Inspector

11/4/05
Date

4.67 Leak Check the Cooldown Line (MD-390225).

Q3 IP END VIEW

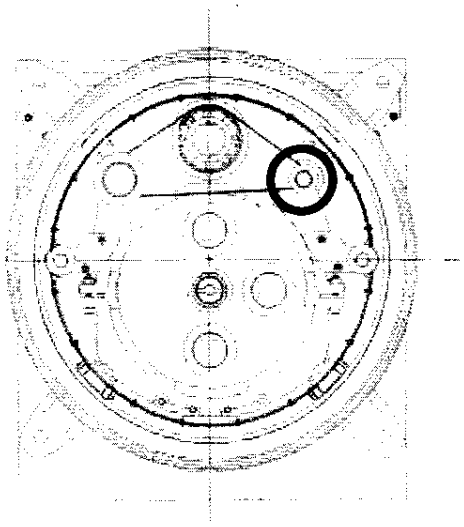

Cooldown Line (MD-390225)

Part No. cooldown line	DETERMINATION OF DETECTABLE LEAK						
	M.D.S. ÷ ((Response – Background) ÷ Leak value) = MDL						
OPERATOR'S LAST NAME	SCALE UNITS BEFORE HELIUM PROBE	SCALE UNITS WHILE ENCLOSURE FLOODING	MDS	Response	Background	Leak Value	MDL
Wilson	46X1	46X1	2	64X5	46X1	39 x E-8	2.85 x E-10

Technician(s) Jackie Wilson

Date 11/4/05

4.68 Leak Check the Pumping Line (MB-390224).

Q3 IP END VIEW

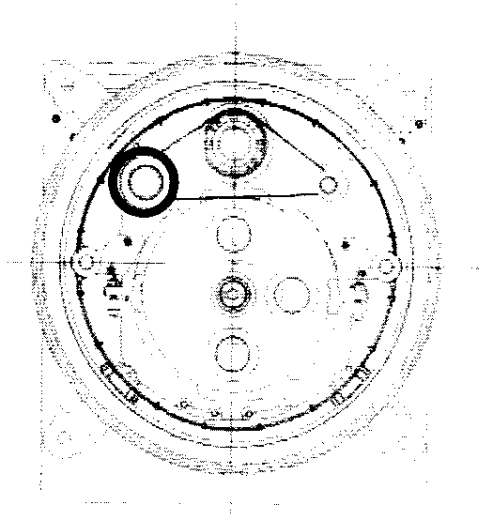

Pumping Line (MB-390224)

Part No. Pumping line	DETERMINATION OF DETECTABLE LEAK						
	M.D.S. ÷ ((Response – Background) ÷ Leak value) = MDL						
OPERATOR'S LAST NAME	SCALE UNITS BEFORE HELIUM PROBE	SCALE UNITS WHILE ENCLOSURE FLOODING	MDS	Response	Background	Leak Value	MDL
Wilson	46X1	46X1	2	64X3	46X1	3.91 x E-8	2.85 x E-16

Technician(s)

11/4/05
Date

5.0 Shield Assembly

5.1 Install the Threaded Rods (Tie Rod Assembly) (MC-390638). See copy of step 19.9 (Q3 Module Assembly Traveler, TR-333729) in designated book, for the distance between the Suspension Rings. Record the previously recorded measurements below.

Non-IP North to IP North 4180 mm ~~4150~~ 4150 mm

Non-IP South to IP South 4186 mm 4156

Technician(s) Date 11/11/05

5.2 Install the Cold Mass Insulation Mounting Lug Blankets (MC-390496).

Technician(s) Date

5.3 Lift the Cold Mass Assembly and place the (IP End) Q3 End Section (ME-390439) and (Non-IP End) Q3 End Section (ME-390439) on the Insertion Rails. Lower the Cold Mass back onto the rails ensuring the holes in the Shield Sections line up with Support Rollers.

Technician(s) Date 11/10/05

5.4 Insert the Mid Section (ME-390435) and the Support Bands (MD-390083).

Technician(s) Date

5.5 Assemble the bottom half of the shield. Leave all bolts loose. Spray all screw threads with Molybdenum.

Technician(s) Date

5.6 Assemble the Cooling Tubes (MD-390437) to the Bottom Half of the Shield.

Technician(s) Date

5.7 Lift the Cold Mass and place the Shield Inner and Outer MLI Blankets (ME-390489 & ME-390490) onto the Insertion Rails in the correct orientation.

Note(s):

Place the Outer Blanket (ME-390490) on the Rails first.

Technician(s) Date 11-14-05

5.8 Lower the Cold Mass onto the rails. Ensure the slits in the blankets line up with Support Rollers.

Technician(s) _____ Date 11-14-05

5.9 Install the Cold Mass MLI Blankets per (ME-390527) and in the same position as Step 4.6.

Technician(s) _____ Date _____

5.10 Cut and install the pipe MLI blankets per Q3 Piping Assembly Insulation Installation (ME-390545).

Technician(s) _____ Date 11-14-05

5.11 Install the Upper Shield per Q3 Thermal Shield Assembly (ME-390436). Spray all screw threads with Molybdenum. Ensure the shield is not sagging prior to the final tightening of the shield screws.

Technician(s) _____ Date 11-14-05

5.12 Install the Shield Blankets (ME-390489 & ME-390490).

Technician(s) _____ Date 11-14-05

6.0 Cold Mass Insertion into the Vacuum Vessel

6.1 Install Green Putty between the Vacuum Vessel and the Insertion Rails.

Technician(s) _____ Date 11-15-05

6.2 Install the Cold Mass Pull-in Tooling.

Technician(s) _____ Date 11-15-05

6.3 Mount the Pneumatic Winch to floor on the West side of the Vacuum Vessel.

Technician(s) _____ Date 11-15-05

6.4 Connect the cable to the Pull-in Tooling.

Technician(s) _____ Date 11-15-05

6.5 Pull the Cold Mass Assembly into the Vacuum Vessel.

Technician(s) _____ Date 11-15-05

6.6 When the Cold Mass is fully inserted, install the Suspension System Adjusting Screws (MB-390039).

Technician(s) _____ Date 11-16-05

6.7 Adjust the Suspension System Adjusting Screw (MB-390039) as needed to center the Cold Mass in the Vacuum Vessel.

Technician(s) _____ Date 11-16-05

6.8 Install Conflat Flanges (MA-390374) w/ Copper Gaskets (MA-390375) and Bolt Set (MA-390376) to Cryostat as per Q3 Cryostat General Assembly (ME-390132).

Technician(s) _____ Date 12\3\06

6.9 Install Target Holders (Right, MD-390539), (Left, MD-390540) and (MD-390211) as per Q3 Cryostat General Assembly (ME-390132).

Technician(s) _____ Date 11-16-05

6.10 Install Reference Socket Cup (MA-390426) as per Q3 Cryostat General Assembly (ME-390132).

Technician(s) _____ Date 11-16-05

Leak ✓ extension tubes on shield tubes.

PART NO. extension tubes for shield tubes		SCALE UNITS BEFORE HELIUM PROBE	SCALE UNITS WHILE ENCLOSURE FLOODING	DETERMINATION OF MINIMUM DETECTABLE LEAK				
DATE TIME	OPERATOR'S LAST NAME			MDS ÷ ((Response - Bckgnd) ÷ Leak Value) = MDL				
11-17-05	Wilson	32X1	32X1	2	54X5	32X1	3.91×10^{-8}	3.28×10^{-10}

PART NO. shield tube extensions		SCALE UNITS BEFORE HELIUM PROBE	SCALE UNITS WHILE ENCLOSURE FLOODING	DETERMINATION OF MINIMUM DETECTABLE LEAK				
DATE TIME	OPERATOR'S LAST NAME			MDS ÷ ((Response - Bckgnd) ÷ Leak Value) = MDL				
11-17-05	[redacted] Wilson	33X1	33X1	2	56X5	33X1	3.91×10^{-8}	3.16×10^{-10}

11-17-05

TRR NEEDED !

7.0 Final Electrical Inspection

not known why! Bob Zeiss

7.1 Perform an electrical inspection on each of the Individual Quadrants and the Cold Mass. Refer to the Valhalla and Leader Free Standing Coil Measurement Procedure (ES-292306).

To measure the Resistance of a Q3 Cold Mass:

1. Use Valhalla Scientific 4300B digital micro-ohmmeter.
2. Set Test Current to 0.1 amp.
3. Set Scale to 2V full scale.
4. Turn temperature compensation on.
5. Turn test current off.
6. Connect I_{HI} to Q4 inner power lead as shown in figure.
7. Connect I_{LO} to Q3 inner power lead as shown in figure.
8. Turn test current on.
9. Connect V_{HI} and V_{LO} to voltage taps as shown in resistance table.
10. To measure Total with leads, connect V_{HI} to Q4 power lead and V_{LO} to Q3 power lead.
11. Read resistance and record in traveler.

(Q3) Resistance				Nominal 3.35 to 3.45 Ξ
				Total Resistance
Connect	Fermi	CERN	KEK	
V_{HI}	VTa1Q3	EE1113	a1	3.382 Ξ
V_{LO}	VTc1Q3	EE1213	c1	
V_{HI}	VTc1Q3	EE1213	c1	3.382 Ξ
V_{LO}	VTb1Q3	EE1313	b1	
V_{HI}	VTa1Q3	EE1113	a1	6.764 Ξ
V_{LO}	VTb1Q3	EE1313	b1	

		Total Resistance with Leads
		Nominal 6.75 to 6.85 Ξ
V_{HI}	Q4 Power Lead	6.778 Ξ
V_{LO}	Q3 Power Lead	

A Gould
Technician(s)

12/14/05
Date

Check resistance of Redundant Voltage Taps.

Q3 Redundant Voltage Taps				Nominal 3.35 to 3.45 Ω
Connect	Fermi	CERN	KEK	Resistance
V_{HI}	VTa2Q3	EE1123	a2	3.382 Ω
V_{LO}	VTc2Q3	EE1223	c2	
V_{HI}	VTc2Q3	EE1223	c2	3.383 Ω
V_{LO}	VTb2Q3	EE1323	b2	

A Gould
Technician(s)

12/14/05
Date

To measure Ls and Q of a Q3 Cold Mass:

1. Use Agilent 4263B LCR Meter.
2. Turn power on by pushing line button. Wait 30 seconds until display screen is lit.
3. Recall program #1. To do this, push recall (Rcl), then push #1, then push Enter.
4. Push Auto/Hold button to release hold.
5. Verify that the frequency displayed in the upper right corner of the display screen is 1000 Hz and the level recorded in the lower right corner of the display screen is 1V or 1000 mV.
6. Connect H_{cur} to Quadrant 4 power lead as shown in figure.
7. Connect L_{cur} to Quadrant 3 power lead as shown in figure.
8. Connect H_{pot} and L_{pot} buttons to voltage taps as shown below.

To measure Q3:

- To measure Quadrants 1&4, connect H_{pot} to VTa1 (EE1113 for Q3), and L_{pot} to VTc1 (EE1213 for Q3).
- To measure Quadrants 2&3, connect H_{pot} to VTc1 (EE1213 for Q3), and L_{pot} to VTb1 (EE1313 for Q3).
- To measure total, connect H_{pot} to VTa1 (EE1113 for Q3), and L_{pot} to VTb1 (EE1313 for Q3).

9. Read Ls and Q from display and record in traveler.

(Q3) Inductance				Nominal 15 to 16 mH
				Total Inductance
Connect	Fermi	CERN	KEK	
H_{POT}	VTa1Q3	EE1113	a1	15.24 mH
L_{POT}	VTc1Q3	EE1213	c1	
H_{POT}	VTc1Q3	EE1213	c1	15.249 mH
L_{POT}	VTb1Q3	EE1313	b1	

				Nominal 30 to 32 mH
				Total Inductance
H_{POT}	VTa1Q3	EE1113	a1	30.483 mH
L_{POT}	VTb1Q3	EE1313	b1	

(Q3) Q-Factor				Nominal 1.0 to 1.2
				Total Q
Connect	Fermi	CERN	KEK	
H_{POT}	VTa1Q3	EE1113	a1	1.1
L_{POT}	VTc1Q3	EE1213	c1	
H_{POT}	VTc1Q3	EE1213	c1	1.1
L_{POT}	VTb1Q3	EE1313	b1	

				Nominal 1.0 to 1.2
				Total Inductance
H_{POT}	VTa1Q3	EE1113	a1	1.1
L_{POT}	VTb1Q3	EE1313	b1	

A Dowd
Technician(s)

12/14/05
Date

To measure the resistance of a Thermometer (RTD):

1. Use Hewlett Packard HP3457A digital multimeter.
2. Record temperature of building within +/- 5 degrees.
3. Press line button to turn line on.
4. Connect wires as shown in Figure below.
   U+ (Black) to Sense HI
   I+ (Yellow) to Input HI
   U- (Red) to Sense LO
   I- (Green) to Input LO
5. Push blue button (function key) once.
6. Push OHMF button.
7. Verify arrow in readout is above the 4WΩ (meaning a 4 wire resistance measurement).
8. Read resistance in ohms and record in traveler.

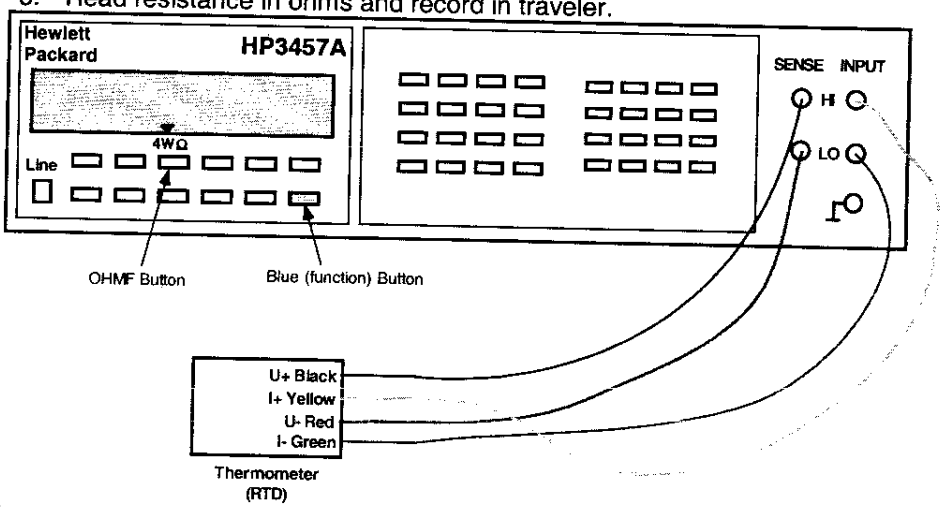

To measure the resistance of a Cryogenic (Warm-up) Heater

1. Use Hewlett Packard HP3457A digital multimeter.
2. Record temperature of building within +/- 5 degrees.
3. Press line button to turn line on.
4. Connect wires as shown in Figure below.
5. Push blue button (function key) once.
6. Push OHMF button.
7. Verify arrow in readout is above the 4WΩ (meaning a 4 wire resistance measurement).
   Note: Although this is technically a 4 wire measurement, it is effectively a 2 wire measurement, since there are only 2 wires connected to each heater.
8. Read resistance in ohms and record in traveler.

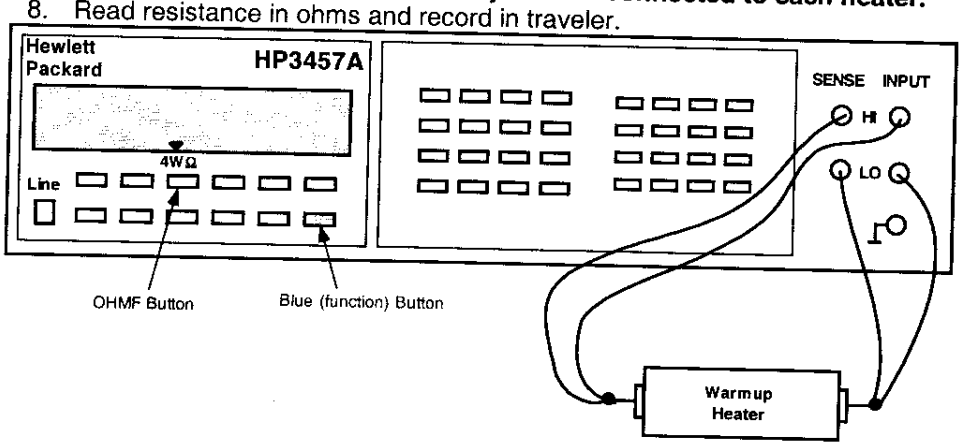

Q3 - RTD's and Cryogenic (warm-up) Heaters				
Temperature of Building (± 5°): _____				
Component	**Fermi**	**CERN**	**Range**	**Resistance**
Q3 RTD, primary	TaQ3	TT8313	**60 to 70 Ω**	65.99 Ω
Q3 RTD, redundant	TbQ3	TT8323	**60 to 70 Ω**	68.403 Ω
Q3 Cryogenic (warm-up) Heater (LE) - wire at top (CERN #1 I+)	W1aQ3	EH8313+	**16 to 18.5 Ω**	17.727 Ω
Q3 Cryogenic (warm-up) Heater (LE) - wire at bottom (CERN #1 I-)	W2aQ3	EH8313-		
Q3 Cryogenic (warm-up) Heater (Non-LE) - wire at top (CERN #2 I+)	W1bQ3	EH8323+	**16 to 18.5 Ω**	17.195 Ω
Q3 Cryogenic (warm-up) Heater (Non-LE) - wire at bottom (CERN #2 I-)	W2bQ3	EH8323-		

Technician(s) _____ Date 12/14/05

Using the Hewlett Packard HP3457A digital multimeter, measure the Protection (Strip) Heater Resistance for Q3.

Q3 Protection (Strip) Heater Resistance					
Fermi	**CERN**	**KEK**	**Description**	**Limit**	**Resistance**
H1aQ3	**YT1113+**	**HA1**	**Circuit A**	**28 to 32 Ω**	29.794 Ω
H2aQ3	**YT1113-**	**HA2**			
H1bQ3	**YT1123+**	**HB1**	**Circuit B**	**28 to 32 Ω**	30.027 Ω
H2bQ3	**YT1123-**	**HB2**			

Technician(s) _____ Date 12/14/05

7.2 Using the Valhalla 4300B, connect 10mA applied voltage thru the corrector Power Leads. Measure Resistance and record in the table below.

Corrector Bus Leads

	V3A	V3B	H3A	H3B	B3A	B3B	B6A	B6B	
	V2A	V2B	H2A	H2B	B4A	B4B	A4A	A4B	
	V1A	V1B	H1A	H1B	A2A	A2B	A3A	A3B	

(View Looking from DFBX into Q3)

Corrector Assembly	Corrector Element	Readout Labels		Power Labels	Resistance
MQSX	MQSX	A2A	EE8223	A2A A2B	.05
		EE8223	A2B		7.51
		A2A	A2B		7.56
MCBXA	MCBXV	V3A	EE8113	V3A, V3B	00.61
		EE8113	V3B		17.04
		V3A	V3B		17.05
	MCBXH	H3A	EE8123	H3A, H3B	.01
		EE8123	H3B		20.85
		H3A	H3B		20.86
	MCTX	B6A	EE8613	B6A, B6B	.01
		EE8613	B6B		97.76
		B6A	B6B		97.77
	MCSX	B3A	EE8313	B3A, B3B	.01
		EE8313	B3B		27.52
		B3A	B3B		27.53
MCSOX	MCOSX	A4A	EE8423	A4A, A4B	.01
		EE8423	A4B		11.49
		A4A	A4B		11.50
	MCOX	B4A	EE8413	B4A, B4B	.01
		EE8413	B4B		12.49
		B4A	B4B		12.50
	MCSSX	A3A	EE8323	A3A, A3B	.01
		EE8323	A3B		12.97
		A3A	A3B		12.98

Technician(s) 12/14/05 Date

PHYSICIST 14-DEC-2005 DATE

8.0 Final Preparations

TRL 1805

8.1 Prepare the Power Leads to be cut by measuring and marking the appropriate cutoff location as per Q3 Module Assembly (ME-369900). Remove any Kapton insulation from the end of the lead to approximately 4 inches beyond the cutoff mark. Clamp the Leads, individually, using the "Lead Clamp Block Tooling".

Technician(s) _____ Date 10/11/05

VERIFIED BY S. GOULD 10/11/05

8.2 Cut the Power Leads as per Q3 Module Assembly (ME-369900).

Technician(s) _____ Date 10/11/05

8.3 Fuse the Ends of the Leads.

Weldor(s) _____ Date 10/11/05

8.4 Remove Clamps when fusing is complete and it is safe to do so.

Technician(s) _____ Date 10/11/05

8.5 Perform a pressurized Helium Leak Check of the Cryostat Assembly.

Part No.	DETERMINATION OF DETECTABLE LEAK						
	M.D.S. ÷ ((Response – Background) ÷ Leak value) = MDL						
OPERATOR'S LAST NAME	SCALE UNITS BEFORE HELIUM PROBE	SCALE UNITS WHILE ENCLOSURE FLOODING	MDS	Response	Background	Leak Value	MDL
	5041	5041	2	3645	5041	3.91 x E-8	6.01 x E-10

Inspector _____ Date 1/13/2006

TRL 1805 Correct order

8.6 Ensure all Pipe Supports are in place.

Technician(s) _____ Date 12-12-05

8.7 - 1
8.8 - 2
8.5 - 3
8.6 - 4

STOP

8.7 Perform a Final Stretched Wire measurement.

Responsible Authority/Physicist _____ Date 12/20/05

STOP

8.8 Perform a Final Cryostat Pipe Survey measurement.

Responsible Authority/Physicist _____ Date 12.22.05

9.0 Production Complete

9.1 Process Engineering verify that the LHC Q3 Cryostat Assembly Traveler (5520-TR-333730) is accurate and complete. This shall include a review of all steps to ensure that all operations have been completed and signed off. Ensure that all Discrepancy Reports, Nonconformance Reports, Repair/Rework Forms, Deviation Index and dispositions have been reviewed by the Responsible Authority for conformance before being approved.

Comments:

Process Engineering/Designee

1/26/05
Date

TD - Engineering Fabrication Component Kit List

ORIGINAL

Process Engineering

RECEIVED JUL 01 2005 MATERIAL CONTROL / IB4

Component Serial No.: LQXC05
Kit submitted by: John Szostak Ext. 2003
Fermi ID No.: 02943C
Date submitted: 27-Jun-05
Need date: 6-Jul-05
Deliver to: ICB
Use with Traveler No.: 333730
Job No.: 248
M&S task number: 300 1.1.1.3.4
Drawing Title: Q3 CRYOSTAT GENERAL ASSEMBLY
Drawing No.: ME-390132 Rev. E

Material Control

Parts available

Verified by: M. Schmidt
Fermi ID No.: 04223N
Date submitted to stockroom: 7/11-5

Parts issued

Issued by:
Fermi ID No.: 11939
Date issued: 14 July 2005
Parts received by E&F: John Szostak
Fermi ID No.: 02943C
Date received by E&F: 7/14/05

	Description	Dwg Size	Number	Rev	Unit	Quantity Required	Location	Quantity Issued	E&F Verified	Routing Form Number	Spares Number / Comment
1	ADJUSTING SCREW	MB	390039	C	EA	8	IB4 Bin	8		81148	27 pcs.
2	VACUUM VESSEL ASSEMBLY	ME	390133	E		ICB HAS					
3	TARGET HOLDER	MD	390211	B	EA	4	R10,1,1	4		74751	10 pcs.
4	Blank Non-Rotatable Conflat Flange, 4.62" OD 304 SS	MA	390374	*	EA	8	R8,3,4	8		78987	48 pcs.
5	COPPER GASKET	MA	390375	*	EA	8	IB4 Bin	8		78429	89 pcs.
6	BOLT SET, HEX HEAD, 5/16 - 24 x 1.25 w/ WASHER	MA	390376	*	EA	80	IB4 Bin	80		78436	484 pcs.
7	WASHER .656" ID x 1.38" OD x .13" THK, STN STEEL	MA	390377	*	EA	8	IB4 Bin	8		77866	50 pcs.
8	REFERENCE SOCKET CUP (Furnished by CERN)	MA	390426	*	EA	8	R1,3,5	8		77884	56 pcs.
9	VINYL FLANGE COVER FOR 75 MM FLANGE	MA	390491	*	EA	6	IB4 Bin	6		78835	179 pcs.
10	VINYL FLANGE COVER FOR 114 MM FLANGE	MA	390492	*	EA	4	IB4 Bin	4		78836	179 pcs.

TD - Engineering Fabri ‘ion Component Kit List

ORIGINAL.

	Description	Dwg Size	Number	Rev	Unit	Quantity Required	Location	Quantity Issued	E&F Verified	Routing Form Number	Spares Number / Comment
11	VINYL FLANGE COVER FOR 134 MM FLANGE	MA	390493	*	EA	7	IB4 Bin	7	[illegible]	78837	238 pcs.
12	VINYL FLANGE COVER FOR 201 MM FLANGE	MA	390494	*	EA	1	IB4 Bin	1	[illegible]	78834	76 pcs.
13	ALIGNMENT FIDUCIAL COVER	MA	390495	*	EA	8	IB4 Bin	8	[illegible]	78957	134 pcs.
14	TARGET HOLDER, RIGHT	MD	390539	*	EA	2	R8,1,2	2	[illegible]	79556	13 pcs.
15	TARGET HOLDER, LEFT	MD	390540	*	EA	2	R8,S1,L5	2	[illegible]	79555	13 pcs.
16	FIDUCIAL MOUNTING BLOCK (On Q1 Welded Assembly ME-390526)	MB	390808	*	EA	2	R1,1,3		—	–	APR [illegible]
17	M16-2 x 70.0 mm LG HEX SHCS, 18-8 STN STEEL	MA	393021	*	EA	8	IB4 Bin	8	[illegible]	77840	75 pcs.
18	M6 FLAT WASHER, 18-8 STN STEEL	MA	393024	*	EA	32	IB4 Bin	32	[illegible]	73287	254 pcs.
19	M10-1.5 x 25mm LG HEX SHCS 18-8 STN STEEL	MA	393036	*	EA	24	IB4 Bin	24	[illegible]	77894	186 pcs.
20	M6-1.0 x 35mm LG HEX SHCS 18-8 STN STEEL	MA	393045	*	EA	16	IB4 Bin	16	[illegible]	78886	112 pcs.
21	M8 x 30mm LG HEX SPRING PIN 18-8 STN STEEL	MA	393048	*	EA	8	IB4 Bin	8	[illegible]	78887	70 pcs.
22	M10 LOCK WASHER, 18-8 STN STEEL	MA	393220	*	EA	24	IB4 Bin	24	[illegible]	80024	308 pcs.
23	STD. SPRING PIN SLOTTED M4 x 20mm LG. PLAIN STEEL	MA	393360	E	EA	16	R2,2,3	16	[illegible]	81763	104 pcs.
INSULATED SHIELD AND PIPING ASSEMBLY		ME	390212	A		1					
24	Q3 SHIELD MLI INNER BLANKET	ME	390489	*	EA	1	Site 38	1	[illegible] IB4	81324	5 pcs.
25	Q3 SHIELD MLI OUTER BLANKET	ME	390490	*	EA	1	Site 38	1	[illegible] IB4	79812	5 pcs.
Q3 THERMAL SHIELD ASSEMBLY		ME	390436	C	EA	1					
26	SUPPORT BAND	ME	390083	A	EA	4	P/N	4	[illegible]	77146	28 pcs.

TD - Engineering Fabri ‘ion Component Kit List

ORIGINAL

	Description	Dwg Size	Number	Rev	Unit	Quantity Required	Location	Quantity Issued	E&F Verified	Routing Form Number	Spares Number / Comment
27	RETAINER	MA	390086	*	EA	16	IB4 Bin	16		78914	126 pcs.
28	ALUMINUM SPACER	MA	390373	*	EA	32	IB4 Bin	32		79001	215 pcs.
29	RETAINING WASHER	MA	390378	*	EA	240	IB4 Bin	240		79002	1573 pcs.
30	Q1 & Q3 SHIELD MID-SECTION SECTION	ME	390435	*	EA	2	P/N	2	IB4	79383	12 pcs.
31	Q3 COOLING TUBE WELDMENT	MD	390437	A	EA	2	P/N	2		79281	10 pcs.
32	Q3 END SECTION	ME	390439	A	EA	4	P/N	4	IB4	82703	24 pcs.
33	SHIELD EXTRUSION SUPPORT BRACKET ASSEMBLY	MD	390683	A	EA	4	R7,S1,L4	4		80686	97 pcs.
34	THERMAL SHIELD EXTRUSION SUPPORT BRACKET ASSEMBLY	MD	390783	*	EA	4	R7,1,4	4		81981	40 pcs.
35	BUTTON HEAD CAP SCREW, M5 x 16.0 LG.	MA	393028	*	EA	240	IB4 Bin	240		79003	1407 pcs.
	Q3 INTERNAL PIPING ASSEMBLY	ME	390213	E	EA	1					
36	PUMPING LINE END FLANGE	MB	390032	B	EA	1	IB4 Bin	1		77210	48 pcs.
37	COOLDOWN LINE END FLANGE	MB	390033	B	EA	1	IB4 Bin	1		77208	29 pcs.
38	Q1 / Q3 PIPE SUPPORT ASSEMBLY	MD	390092	A	EA	3	P/N	3	IB4	76617	18 pcs.
39	RETAINING CLIP	MA	390103	*	EA	12	IB4 Bin	12		83097	119 pcs.
40	TIE BAR RETAINING CLAMP	MB	390136	*	EA	4	IB4 Bin	4		77132	21 pcs.
41	Q3 PUMPING LINE	MB	390224	*	EA	1	P/N	1		80217	4 pcs.
42	Q3 COOLDOWN LINE	MB	390225	A	EA	1	P/N	1		80218	5 pcs.
43	Q3 4.5K INTERCEPT LINE TUBE	MB	390226	*	EA	3	Site 38	3		81303	15 pcs.

ORIGINAL

TD - Engineering Fabri 'ion Component Kit List

	Description	Dwg Size	Number	Rev	Unit	Quantity Required	Location	Quantity Issued	E&F Verified	Routing Form Number	Spares Number / Comment
44	WELD CONNECTOR ADAPTER	MC	390278	*	EA	1	R1,S1,L3	1	[illegible]	79471	6 pcs.
45	INTERCEPT LINE PIPE STOP	MA	390379	A	EA	6	IB4 Bin	6	[illegible]	78894	103 pcs.
46	Q1 / Q3 PIPE ANCHOR	MC	390486	*	EA	1	R8,S1,L4	1	[illegible]	79387	7 pcs.
47	Q3 COLD MASS ASSEMBLY	ME	390108	B		ICB HAS					
48	Q3 PUMPING LINE NON-IP END EXTENSION SPOOL	MD	390650	*	EA	1	R10,1,3	1	[illegible]	82562	5 pcs.
49	Q3 COOLDOWN LINE NON-IP END EXTENSION SPOOL	MC	390663	*	EA	1	R7,1,2	1	[illegible]	82563	5 pcs.
50	4.5K INTERCEPT LINE NON-IP END EXTENSION WELDMENT	MD	390679	*	EA	3	R1,3,2	3	[illegible]	82653	15 pcs.
51	4.5K INTERCEPT TUBE BAR BRACE	MB	390816	*	EA	2	IB4 Bin	2	[illegible]	82541	26 pcs.
52	M6 x 45.0mm LG HEX SHCS, 18-8 STN STEEL	MA	393017	*	EA	4	IB4 Bin	4	[illegible]	82690	51 pcs.
53	M6 HEX NUT, 18-8 STN STEEL	MA	393022	A	EA	4	IB4 Bin	4	[illegible]	73269	184 pcs.
54	M6 FLAT WASHER 18-8 STN STEEL	MA	393024	*	EA	4	IB4 Bin	4	[illegible]	73287	259 pcs.
55	M6 LOCK WASHER 18-8 STN STEEL	MA	393026	*	EA	4	IB4 Bin		—	—	ARR 0 ~~289~~ pcs.
	Q3 HEAT EXCHANGER ASSEMBLY	ME	390214	A	EA	1					
56	CORRUGATED TUBE FLANGE	MB	390030	A	EA	1	IB4 Bin	1	[illegible]	77207	48 pcs.
	OUTER SHELL WELDMENT	MD	390385	A	EA	1					
57	FLAT END CAP	MD	390178	*	EA	1	R1,2,3	1	[illegible]	79644	6 pcs.
58	PIPE	MD	390215	*	EA	1	P/N	1	[illegible]	79999	5 pcs.
59	EXTENSION SPOOL	MD	390659	*	EA	1	R10,1,3	1	[illegible]	81007	5 pcs.

ORIGINAL

TD - Engineering Fabrication Component Kit List

	Description	Dwg Size	Number	Rev	Unit	Quantity Required	Location	Quantity Issued	E&F Verified	Routing Form Number	Spares Number / Comment
60	**EXTENSION WELD FITTING**	**MD**	**390661**	*	**EA**	**1**	**IB4 Bin**	1		80832	**9 pcs.**
	CORRUGATED TUBE ASSEMBLY	ME	390216	A	EA	1					
61	**CORRUGATED TUBE SUPPORT**	**MC**	**390028**	*	**EA**	**6**	**R9,S1,L4**	6		78144	**7 pcs.**
62	**CORRUGATED TUBE RESTRICTOR**	**MC**	**390029**	**A**	**EA**	**1**	**R9,S1,L4**	1		77724	**40 pcs.**
63	**CORRUGATED TUBE WELDMENT**	**ME**	**390395**	**A**	**EA**	**1**	**P/N**	1		79283	**5 pcs.** *
64	**EXTENSION ADAPTER**	**MD**	**390658**	*	**EA**	**1**	**R7,1,4**	1		81006	**5 pcs.** *
	Q3 PIPING ASSEMBLY INSULATION INSTALLATION	ME	390545	A	EA	1					
65	**Q1 / Q3 MLI END BLANKET**	**ME**	**390542**	*	**EA**	**2**	**Site 38**	2	IB4	81330	**11 pcs.**
66	**Q1 / Q3 MLI MID BLANKET**	**ME**	**390543**	*	**EA**	**1**	**Site 38**	1	IB4	79878	**5 pcs.**
	Q1 & Q3 INSTALLATION TIE ROD ASSEMBLY	MC	390638	*	EA	2					
67	**Q1 & Q3 INSTALLATION TIE-ROD SHORT THREADED ROD**	**MA**	**390639**	*	**EA**	**2**	**R2,2,2**	2		81018	**APR**
68	**JAM NUT (LH)**	**MA**	**393046**	*	**EA**	**4**	**IB4 Bin**	4		80074	**30 pcs.**
69	**STD ANSI HEX THIN JAM NUT 1/2-13 UNC**	**MA**	**393225**	*	**EA**	**8**	**IB4 Bin**	8		80073	**92 pcs.**
70	**STD HEX COUPLING NUT 1/2-13 UNC (RH-LH)**	**MA**	**393226**	*	**EA**	**4**	**IB4 Bin**	4		80075	**24 pcs.**
71	**THREADED ROD 1/2-13 UNC - 24 x 6 FT LONG**	**MA**	**393227**	*	**EA**	**2**	**R7,2,4**	2		80061	**12 pcs.**
72	**THREADED ROD 1/2-13 UNC - 24 (LH) x 3 FT LONG**	**MA**	**393228**	*	**EA**	**2**	**R1,2,3**	2		80072	**10 pcs.**
	Q3 SUSPENSION SYSTEM INSTALLATION	ME	390528	*	EA	1					
73	**TIE BAR SHIM, 6.4 mm**	**MB**	**390118**	*	**EA**	**4**	**IB4 Bin**	4		77204	**16 pcs.**

ORIGINAL

TD - Engineering Fabri ion Component Kit List

	Description	Dwg Size	Number	Rev	Unit	Quantity Required	Location	Quantity Issued	E&F Verified	Routing Form Number	Spares Number / Comment
74	TIE BAR SHIM, 2.4 mm	MB	390119	*	EA	4	IB4 Bin	4	QA	83092	39 pcs.
75	TIE BAR SHIM, 0.8 mm	MB	390120	*	EA	4	IB4 Bin	4	QA	77202	4 pcs.
76	SUSPENSION MTG BRACKET	MD	390279	*	EA	4	R9,S1,L1	4	QA	77180	24 pcs.
77	Q1 / Q3 TIE BAR ASSEMBLY	MC	390400	*	EA	2	P/N	2	QA IB4	77976	12 pcs.
78	Q3 COLD MASS WELDED ASSEMBLY	ME	390529	B		ICB HAS					
79	M8 x 50.0 mm LG SHCS 18-8 STN STEEL	MA	393020	*	EA	12	IB4 Bin	12	QA	82378	73 pcs.
80	M8 HEX NUT, 18-8 STN STEEL	MA	393023	*	EA	12	IB4 Bin	12	QA	82857	340 pcs.
81	M8 FLAT WASHER, 18-8 STN STEEL	MA	393025	*	EA	12	IB4 Bin	12	QA	76745	1182 pcs.
82	M8 LOCK WASHER, 18-8 STN STEEL	MA	393027	*	EA	12	IB4 Bin	12	QA	76744	1129 pcs.
	FIXED SUPPORT ASSEMBLY	ME	390041	D	EA	1					
83	SUSPENSION SYSTEM SUPPORT RING ASSEMBLY	ME	390043	B	EA	1	NT02408	1	QA IB4	76906	9 pcs.
84	SUSPENSION SYSTEM SUPPORT PIN	MB	390047	B	EA	2	R8,S3,L2	2	QA	76914	34 pcs.
85	SUSPENSION SYSTEM SUPPORT PIN SHIM - 1mm	MA	390275	A	EA	8	IB4 Bin	8	QA	83295	QC 0
86	SUSPENSION SYSTEM SUPPORT PIN SHIM - 0.5mm	MA	390276	*	EA	8	IB4 Bin	8	QA	82896	252 pcs.
87	SUSPENSION SYSTEM SUPPORT PIN BOLTS	MA	390277	*	EA	8	IB4 Bin	8	QA	76913	128 pcs.
88	TWO PIECE CLAMP ON COLLAR	MA	390321	A	EA	4	IB4 Bin	4	QA	76912	24 pcs.
89	SUSPENSION SYSTEM SUPPORT PIN SHIM 0.13 mm	MA	390480	*	EA	8	R2,S2,L4	8	QA	79121	155 pcs.
90	SUSPENSION SYSTEM SUPPORT SHIM 0.25 mm	MA	390481	*	EA	12	R2,S2,L4	12	QA	79122	225 pcs.

ORIGINAL

TD - Engineering Fabri 'ion Component Kit List

	Description	Dwg Size	Number	Rev	Unit	Quantity Required	Location	Quantity Issued	E&F Verified	Routing Form Number	Spares Number / Comment
	SLIDING SUPPORT ASSEMBLY	ME	390042	C	EA	1					
91	SUSPENSION SYSTEM SUPPORT RING ASSEMBLY	ME	390043	B	EA	1	NT02408	1	IB4	76906	9 pcs.
92	SUSPENSION SYSTEM SUPPORT PIN	MB	390047	B	EA	2	R8,S3,L2	2		76914	34 pcs.
93	SUSPENSION SYSTEM SUPPORT PIN SHIM - 1mm	MA	390275	A	EA	8	IB4 Bin	8		83295	QC 0
94	SUSPENSION SYSTEM SUPPORT PIN SHIM - 0.5mm	MA	390276	*	EA	8	IB4 Bin	8		82896	252 pcs.
95	SUSPENSION SYSTEM SUPPORT PIN BOLTS	MA	390277	*	EA	8	IB4 Bin	8		76913	128 pcs.
96	SUSPENSION SYSTEM SUPPORT PIN SHIM 0.13 mm	MA	390480	*	EA	8	R2,S2,L4	8		79121	155 pcs.
97	SUSPENSION SYSTEM SUPPORT SHIM 0.25 mm	MA	390481	*	EA	12	R2,S2,L4	12		79122	225 pcs.
	Q3 MAGNET INSULATION INSTALLATION	ME	390527	B	EA	1					
98	MOUNTING LUG BLANKET	MC	390496	*	EA	8	Site 38	8	IB4	81326	127 pcs.
99	Q1/Q3 END BLANKET	ME	390521	*	EA	2	Site 38	2	IB4	81327	11 pcs.
100	Q1/Q3 MID BLANKET	ME	390522	*	EA	1	Site 38	1	IB4	81328	6 pcs.

ADDITIONAL PARTS REQUEST

ADDITIONAL PARTS REQUEST FORM SHALL BE USED TO ACCESS ALL ITEMS FROM INVENTORY WITH THE EXCEPTION OF PARTS KITS.

THIS FORM MUST BE SIGNED BY AN ACQUISITIONER BEFORE BRINGING TO THE STOCKROOM

MAGNET OR COIL # *LQXC05*

REQUESTED BY *Steve Gould*

DATE REQUESTED *1/23/06*

DELIVER TO *ICB*

BUDGET CODE *300/1.1.1.3.4(LCD)*

NEED BY DATE *1/23/06*

JOB TICKET #

MMR #

MACHINE SHOP REQ. #

PO #

PURCHASE RELEASE #

OTHER

PARTS STATUS (CHECK ONE)

- ☐ DEFECTIVE PARTS ISSUED
- ☐ PARTS SCRAPPED
- ☒ A/R ITEMS
- ☐ DEFECTIVE ASSEMBLY
- ☐ MISSING FROM KIT ALREADY ISSUED
- ☒ INDIVIDUAL PARTS
- ☐ CONSUMABLES
- ☐ PARTS LOST

ACQUISITIONER SIGNATURE [signature] **ID#** 7223 **DATE** 1/23/06

PLEASE INDICATE REVISION REQUIRED

LOCATION	PART #	REV	QTY	UOM	DESCRIPTION	RF #	SIR #
31 SINK 16 R7,1,2	390878		4	Each	Adjusting Screw	83342	

STOCKROOM SIGNATURE [signature] **ID#** 11939 **DATE** 1/23/06

PARTS DELETED FROM DATABASE **ID#** **DATE**

A COPY OF THIS FORM IS TO BE INCLUDED IN WITH THE TRAVELER

PARTS RECEIVED BY [signature] **ID#** 13492 **DATE** 1-23-06

Revision Request Control Number: 1805

Specification Number: 5520 - TR - 333730 Current Revision: D

Traveler or Document Title LHC Q3 LQXC Cryostat Final Assembly Traveler

Step #/Description of Revision:

4.40 Remove step. Same as 4.37
8.2 Step to be verified by Lead Person
8.7 Now Step 8.5
8.8 Now Step 8.6
8.5 Now Step 8.7
8.6 Now Step 8.8

Bob Jensen	Bob Jensen	1/26/2006
Originator	Responsible Authority	Date

Revision Incorporated into the Traveler:		
	Revision Incorporated By	Date

Process Engineering Final Review:		
	Process Engineering/Designee	Date

Instructions for the completion of the Revision Request Form

Note(s):

Multiple steps may be effected by one Revision Request Form but only one specific Traveler or Document may be effected by each Revision Request Form.

If completing this form by hand, a Revision Request Control Number must be obtained before processing.

If completing this form entirely by electronic means, the printed copy to be filed in the Process Engineering Office is to be initialed by the individual incorporating the Revision Request and the individual who reviewed the Traveler or Document.

Originator Instructions:

1) Specification Number: - Enter the Specification Number of the Traveler or Document to be revised. (Document title is inserted automatically from the spec. #)

2) Current Revision: - Enter the Revision of the Traveler or Document to be revised.

3) Step# / Description of the Revision: - Enter a description of the revision to be made and the step# it applies to, if applicable. If needed to describe the revision attach a copy of the page(s). If the revision is coming from a related document such as a Discrepancy Report or an Engineering Order attach a copy of that document to the Revision Request Form.

4) Originator: - Originator is the person generating the form. (Select Name from List)

5) Responsible Authority: - Responsible Authority is person responsible for the process in question. (Select Name from List)

Process Engineering Office Instructions:

1) Revision Incorporated into the Traveler: - Signature of the individual who incorporated the revision.

2) Process Engineering Final Review: - Review the Traveler or Document revised, sign and date the form. The original completed Revision Request Form will be retained by the Process Engineering Office in the Revision Request Binder.