Document ID: 8077

LHC Q3 LMQXC Module Assembly Traveler

333729 / Rev. D

Job No:	**248**
E + F Project/Task No.:	**300/1.1.1.6.2**
M + S Project/Task No.:	**300/1.1.1.6.2**

Place This Side Down For Scanning!!!

Magnet Travelers

LMQXC07-0

Document ID:

8077

Job No.:

248

Project/Task No.

300/1.1.1.6.2

Series:

LQXC

Serial No:

LMQXC07

Rework ID:

0

Specification No.:

333729

Revision:

D

LMQXC07-0

Fermi National Accelerator Laboratory
Batavia, IL 60510

LARGE HADRON COLLIDER
Q3 - LMQXC
COLD MASS MODULE ASSEMBLY TRAVELER

Reference Drawing(s):
Q3 Cold Mass Welded Assembly (ME-390529)
Q3 Module Assembly (ME-369900)

Project/Task Number: *300/1.1.1.6.2*

Released By: *John Szostak* **Magnet/Device Series:** *LQXC*

Date Issued: *8/10/2005 7:58:56 AM* **Scanned Pages:** 185

Prepared by: J. Szostak

Title	Signature	Date
TD / E&F Process Engineering	*Bob Jensen* Bob Jensen / Designee	*7/13/05*
TD / LHC Production Supervisor	*Jim Rife* Jim Rife / Designee	*7/13/05*
TD / LHC Production Engineer	*Rodger Bossert* Rodger Bossert / Designee	*7/13/05*
TD / LHC Project Engineer Cryostat	*Tom Nicol* Tom Nicol / Designee	*7/13/05*
TD / LHC Project Physicist	*Andy Hocker* Michael Lamm / Designee	*7/13/05*
TD / LHC Program Manager	*Jim Kerby* Jim Kerby / Designee	*7/13/05*

Revision Page (1 of 3)

Revision	Step No.	Revision Description	TRR No.	Date
None	N/A	Initial Release	N/A	8/20/04
A	5.0	Modified Step. Modified to reflect production floor process.	1682	12/15/04
	9.2	Modified Step. Changed to Crew Chief signoff.		
	9.3	Modified Step. Changed to Weldor signoff.		
	12.3	Modified Step. Added "...and Figure 12.0."		
	15.2	Modified Step. Changed to "Using the Valhalla 4300B, connect 10mA applied voltage thru the corrector Power Leads. Measure Resistance and record in the table below." Modified Table. Added Picture of Corrector Bus Leads.		
	17.1	Modified Step. Changed (MC-369552) to (MC-369522).		
	17.4	Modified Step. Changed IP to Non-IP.		
	17.6	Modified Step. Changed IP to Non-IP.		
	17.7.2	Modified Step. Changed Non-IP to IP.		
	17.8	Modified Step. Changed Non-IP to IP.		
	17.10	Modified Step. Changed Non-IP to IP.		
	18.9	Added Step. "Tack weld the Extension Tube (MD-390667) to the Cold Mass per (ME-390529)."		
	18.11	Added Step. "Weld the Extension Tube (MD-390667) to the Cold Mass per (ME-390529)."		
	19.9	Modified Step. Changed to "Measure the distance between the Suspension Rings at the bottom of the Threaded Rods and record measurements below. Copy this page and place copy in designated book for later reference. (TR-333730, Q3 Cryostat Final Assembly, Step 5.1)."		
	19.17	Modified Step. Changed Non-IP to IP.		
	19.18	Modified Step. Removed Center – North and Center – South.		
	19.21	Removed Step. "Weld the Shielding Blocks (MB-390534) to the Cold Mass per Q3 Suspension System Installation (ME-390525)." No shielding Blocks		
	19.22	Modified Step. Added 112.5.		
	19.23	Modified Step. Added 337.5.		
	21.1	Modified Step. Modified Resistance Table.		
	21.2	Modified Step. Changed to "Using the Valhalla 4300B, connect 10mA applied voltage thru the corrector Power Leads. Measure Resistance and record in the table below." Modified Table. Added Picture of Corrector Bus Leads.		
	22.2	Added Step. Added "Assemble/Install Hypertronics Connectors, **without Cover** at **IP End** as per Q3 Module Assembly (ME-369900). Pin Numbers for connectors are shown in Table 22.2 below."		
	22.3	Added Step. "Inspect Hypertronics Connector. Ensure that it is free of flux and that Kapton has been installed properly."		
	22.4	Added Step. "After LHC Project Physicist / designee has signed the above step, complete the installation of the Hypertronics."		
	23.2	Modified Step. Changed to "Using the Valhalla 4300B, connect 10mA applied voltage thru the corrector Power Leads. Measure Resistance and record in the table below." Modified Table. Added Picture of Corrector Bus Leads.		
	23.4	Added Step. "Ensure electrical measurements are acceptable and confirm Hypertronics Connector has been installed properly."		

Revision Page (2 of 3)

Revision	Step No.	Revision Description	TRR No.	Date
B	1.6	Added Step. "Protect the bellows during all stages of production." **DR No. HGQ-0500.**	1695	3/4/05
	7.6	Removed Step. Moved to after electrical. New step 7.8.		
	7.0 to 17.0	Modified order of steps per production request. (Subsequent changes to steps will reflect new Step Numbers)		
	7.14	New step. "Splice Cold mass voltage taps to wire bundle. Verify splices electrically." Per LMQXC02.		
	7.15	New step. "Attach wires using putty and install the Voltage Tap Splice Cover Block (MC-430146)." Per LMQXC02.		
	9.5	Added Step. "Solder Corrector Wires per Q3 Module Assembly (ME-369900) and as shown in Figure 9.4-A."		
	9.6	Added Step. "Install voltage taps on MCBXA corrector leads. One tap is to be soldered to the "A" Lead of each corrector element. Wire labels are shown below."		
	11.12	Modified Step. Added check boxes and specifications for measurements taken with Mini-level.		
	12.1	Modified Step. Added picture, (ME-369900 - Rev. A, Sheet 3 of 5), per production request.		
	12.11	Added Step. "Solder MQSX Corrector Wires."		
	12.13	New Step. "At the IP End, attach Spider Assembly (MD-430072) as per Q3 Module Assembly (ME-369900)."		
	15.3	New Step. "At the Non-IP End, attach Spider Assembly (MB-430096) as per Q3 Module Assembly (ME-369900)." **Per DR No. HGQ-0520.**		
	16.2	Modified Step. Added "Record Initial resistance of Corrector Element and record below." Added column to record initial resistance of Corrector Element.		
	16.3	Added Step. "Attach Backing Splines as per Q3 Module Assembly (ME-369900)."		
	16.4	Added Step. "At the IP End (Lead End) wrap the Springboard Assemblies in Kapton and then wrap with Kevlar String (MA-369912) every ½ - ¾" over Kapton as per Q3 Module Assembly (ME-369900)."		
	16.5	Added Step. "At the Non-IP End (Non-Lead End) wrap the Springboard Assemblies in Kapton and then wrap with Kevlar String (MA-369912) every ½ - ¾" over Kapton as per Q3 Module Assembly (ME-369900)."		
	17.3	Modified Step. Moved Step per production request. "Position the Beam Tube (MC-369522) longitudinally per Q3 Cold Mass Welded Assembly (ME-390529)." New Step 20.1		
	19.2	Modified Step. Changed to "Insert the Fixed Support Assembly (ME-390041) into the Vacuum Vessel and position at the IP End."		
	19.5	Modified Step. Changed to "Insert the Sliding Support Assembly (ME-390042) in to the Vacuum Vessel and position at the Non-IP End."		
	20.8	Modified Step. Changed to "Perform a stretched wire measurement of the system to align the Beam Tube Flange within ± .5 mm."		
	21.2	New Step. "Check Q1 & Q2 Instrumentation Bus Wires for Continuity." Added Table.		
	21.3	Modified Step. Added "Record Initial resistance of Corrector Element and record below." Added column to record initial resistance of Corrector Element.		
	22.1	Modified Step. Changed Picture of "Hypertronics Connector Pin Locations (Q3 non-IP end) VIEW: Male (pin) solder cup side" to show correct hookup configuration to DFBX.		
	23.0	Modified Step. Removed electrical checks that are previously performed by MTF, per production request.		

Revision Page (3 of 3)

Revision	Step No.	Revision Description	TRR No.	Date
C	7.6	Modified Step. Modified Table. Added Column for RTD Serial Number per LHC Production Supervisor.	1721	6/8/05
	7.14	Modified Step. Added electricals performed by MTF.		
	22.3	Modified Step. Added electricals performed by MTF.		
	19.3	Modified Step. Changed to "Install the Suspension System Adjusting Screws (MB-390039) and Socket Head Cap Screws (MA-393021) into the Vacuum Vessel to hold the Fixed Support Assembly in place. Coat all screw threads with Molybdenum Disulfide prior to installation." Per production request.		
	19.6	Modified Step. Changed to "Install the Suspension System Adjusting Screws (MB-390039) and Socket Head Cap Screws (MA-393021) into the Vacuum Vessel to hold the Fixed Support Assembly in place. Coat all screw threads with Molybdenum disulfide prior to installation." Per production request.		
D	3.0	Modified Step. Changed title.	1751	7/13/05
	4.0	Added Step. Added steps per production request.		
	7.13	Removed Step. "Disassemble the MCBXA Corrector Magnet from the MCBXA Corrector Mounting Ring (ME-390037)." Per production request.		
	7.21	Removed Step. "Disassemble the MQSX Corrector Magnet from the MQSX Corrector Mounting Ring (MD-309209)." Per production request.		
	8.1	Removed Step. "Move the MQSX Corrector Magnet up against the Mounting Ring on the Q3 Cold Mass and bolt the MQSX Corrector Magnet to the Q3 Cold Mass using the Silver Plated Mounting Screw and torque bolts to 500 in.-lbs. Shim between the corrector and flange as necessary." Per production request.		
	8.2	Modified Step. Moved to after step 7.18. (New step 8.19)		
	8.4	Removed Step. "Solder Corrector Wires per Q3 Module Assembly (ME-369900) and as shown in Figure 8.5-A."		
	9.0	Changed Title to Final Corrector Preparations. per production request. (New Step 10.0.)		
	9.1	Modified Step. Removed "Move the MCBXA Corrector Magnet up against the Mounting Ring on the Q3 Magnet, and bolt the MCBXA Corrector Magnet to the Q3 Cold Mass using the 3" Silver Plated Mounting Screw (MA-390247) and " from step per production request. (New Step 10.1)		
	10.0 to 25.0	Modified Steps per production request and marked-up traveler.		

Ensure appropriate memos and specific instructions are placed with the traveler before issuing the sub traveler binder to production.

1.0 General Notes

1.1 All steps that require a sign-off shall include the Technician/Technician(s)s first initial and full last name.

1.2 No erasures or white out will be permitted to any documentation. All incorrectly entered data shall be corrected by placing a single line through the error, initial and date the error before adding the correct data.

1.3 All Discrepancy Reports issued shall be recorded in the left margin next to the applicable step.

1.4 Personnel shall perform all tasks in accordance with current applicable ES&H guidelines and those specified within the step.

1.5 Cover the product/assembly with Green Herculite (Fermi stock 1740-0100) when not being serviced or assembled.

1.6 Protect the Bellows during all stages of production.

2.0 Parts Kit List

2.1 Attach the completed Parts Kit for this production operation to this traveler. Ensure that the serial number on the Parts Kit matches the serial number of this traveler. Verify that the Parts Kit received is complete.

John J. Gyostak
Process Engineering/Designee

8/19/05
Date

3.0 Q3 Module Verification

3.1 Record the serial number for each Magnetic Component Assembly.

Q3 Serial Number: 4QXA-17

MCBXA Corrector Coil Serial Number: HCMCBXA_001-SI000030

MQSX Corrector Coil Serial Number: HCMQSX_001-AN000007

MCSOX Corrector Coil Serial Number: HCMCSOX001-AN000006

STOP

Responsible Authority/Physicist

Date 9/19/05

3.2 Attach the Certificate of Conformity, for vendor supplied components, and the Quality Record, for vendor supplied components, to this traveler.
Verify that the Certificate of Conformity and /or the Quality Record (as required) has been filled out and performed by Fermilab personnel.

STOP

Crew Chief

Date 9/23/05

JR 4291

4.0 Corrector Pre-alignment

4.1 Set up Corrector Magnets for Pre-alignment referencing.

Technician(s) Date

4.2 Perform Stretched Wire Measurement of Corrector Magnets.

Responsible Authority/Physicist Date

4.3 Verify Corrector Roll Angles.

Responsible Authority/Physicist Date

4.4 Set-up Pre-alignment plates for welding.

Technician(s) Date

4.5 Weld the Pre-alignment plates to the MCBXA, MQSX AND MCSOX Correctors. (See Serial Numbers from step 3.1)

Weldor(s) Date

4.6 Verify that the Pre-alignment plates are positioned / welded in their proper locations and document the data.

Responsible Authority/Physicist Date

5.0 Q3 Magnet Placement (Module Assembly Tooling)

5.1 Configure tooling for Q3 Cold Mass Assembly (ME-390528) per Final Cold Mass Assembly Stat – Support and Clamping Fixture (ME-369768).

Technician(s) _____ Date 8-15-05

5.2 Configure tooling for Corrector Mounting per Cold Mass / Cryostat Station Corrector Support Fixture (ME-369780), 13.780 Diameter Corrector Magnet.

Technician(s) _____ Date 8-15-05

5.3 Configure tooling for End Dome Mounting per Cold Mass Cryostat Station Final Assembly (ME-369765, View E-E).

Technician(s) _____ Date 8-15-05

5.4 Move the Q3 Cold Mass to the Cold Mass Module Assembly Tooling, placing it nearest the West End of ICB, with the Lead End of the Magnet facing west as per Q3 Cold Mass Welded Assembly (ME-390529).

Technician(s) _____ Date 8-15-05

6.0 Bus Assembly Installation

6.1 Measure the length of the Cold Mass and record below.

Cold Mass Length: 21' 10 3/8"

E. Stu / O. Fria
Technician(s)

Aug 15, 2005
Date

6.2 Add four feet (48 inches) to the Cold Mass Length and record below. This will be the top piece.

Cold Mass Length from step 6.1: 21' 10 3/8"

Add: + 48 in.

Length of top piece: 25' 10 3/8"

E. Stu / O. Fria
Technician(s)

August 15, 2005
Date

STOP

Crew Chief

8/15/05
Date

6.3 Cut a piece of Nomex (MB-430064) equal to the total length recorded in step 6.2. This will be referred to as the top piece.

Jackie + Lisa
Technician(s)

8/12/05
Date

6.4 Record the total length of the top piece, recorded in step 6.2, below. Multiply the total by 2 and record the number below. This will be the length of the bottom piece.

Length of top piece: 26'

Multiply by 2: x 2

Length of bottom piece: 52'

E. Stu
Technician(s)

August 15, 2005
Date

STOP

Crew Chief

8/15/05
Date

6.5 Cut a piece of Nomex (MB-430064) equal to the total length recorded in step 6.4. This will be referred to as the bottom piece.

Technician(s) Date 8/12/05

6.6 Pull the two pieces of Nomex (MB-430064) through the Bus Slot. Leave two feet of Nomex extending past the end of the Cold Mass at the Lead End and Non-Lead End. Fold top piece over top of Cold Mass and fold bottom piece under bottom of Cold Mass. (As shown n figure 6.6 below)

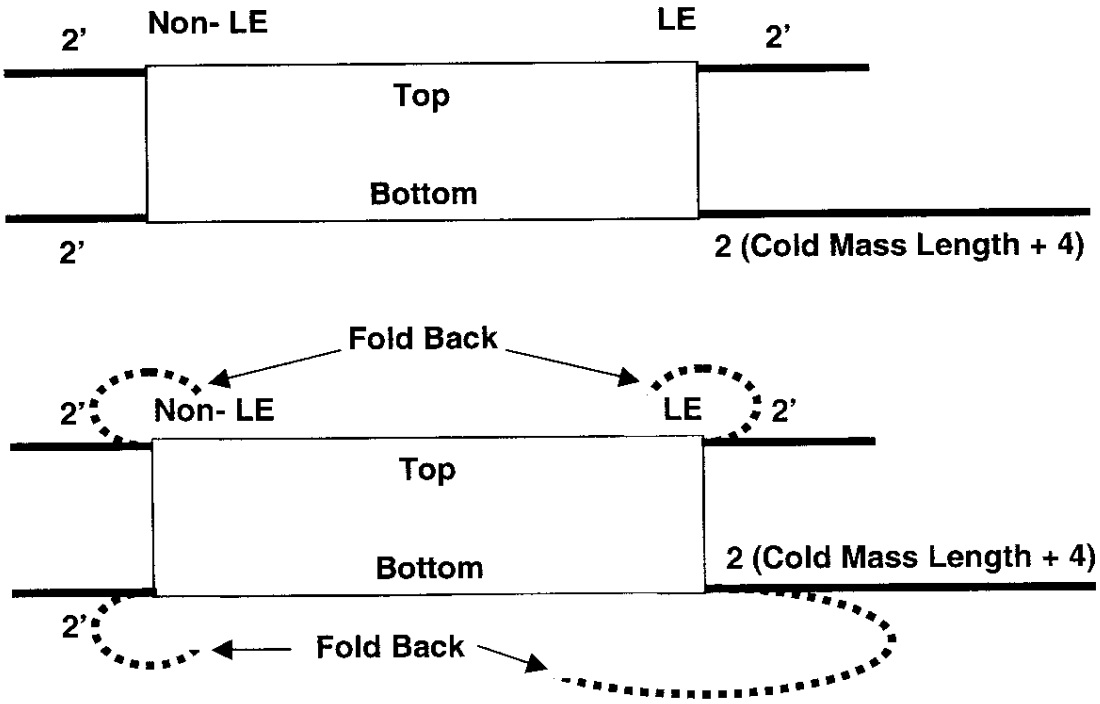

Figure 6.6

Technician(s) Date Aug 15, 2005

6.7 Starting at the Lead End, slide the Lead and Corrector Coil Bus Assembly (MB-430065) into Magnet Bus Slot between the two pieces of Nomex (MB-430064). The bottom piece of Nomex will move with the bus. Pull the bottom piece as it is being fed into the Cold Mass.

Technician(s) Date Aug 15, 2005

6.8 Cut Nomex (MB-430064) equal to the Length of the Cold Mass. (See Step 6.1 for reference)

Technician(s) Date Sept 8, 2005

LMQXC - 07 Post Bus Install Electrical

5.0 Electrical Inspection

X 5.1 Perform a Resistance Measurement of the Lead & Corrector Coil Bus Assembly (MD-430065).

5.0 Issued per TRR# 1779

Lead Busses

1	2
3	4

Looking from Q3 to DFBX

Component	Measurement
Lead Bus #1	121.8 ~ Ω
Lead Bus #2	122.8 ~ Ω
Lead Bus #3	119.9 ~ Ω
Lead Bus #4	121.6 ~ Ω

used Valhalla 4300B
2V 1A

Scale 2V 1A

Corrector Busses

1	2	3	4	5
6	7	8	9	10
11	12	13	14	15

Looking from Q3 to DFBX

Component	Measurement
Corrector Bus #1	195.0 mΩ
Corrector Bus #2	194.4 mΩ
Corrector Bus #3	194.6 mΩ
Corrector Bus #4	194.8 mΩ
Corrector Bus #5	195.0 mΩ
Corrector Bus #6	195.3 mΩ
Corrector Bus #7	195.5 mΩ
Corrector Bus #8	195.0 mΩ
Corrector Bus #9	194.7 mΩ
Corrector Bus #10	195.0 mΩ
Corrector Bus #11	194.9 mΩ
Corrector Bus #12	195.2 mΩ
Corrector Bus #13	195.3 mΩ
Corrector Bus #14	194.6 mΩ
Corrector Bus #15	194.8 mΩ

E. [illegible] / O. Fi[illegible]
Technician(s)

aug 15, 2005
Date

STOP

XXX 5.2 Verify that the Readings in Step 5.1 are acceptable.
Approved for next Major Assembly Procedure.

Andy Hook 8-SEP-2005

Responsible Authority/Physicist Date

5.3 Hipot Lead Busses to ~~5~~ kV as shown in figures 5.3-A and 5.3-B. Max Leakage is 2 μA.

~~4 kV~~ 5KV

STOP

Have Crew Chief verify setup and sign below before continuing.

8-16-05

Crew Chief Date

Hipot - Lead Busses to each other

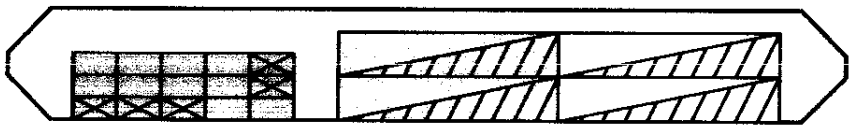

View of bus looking from Q3 to DFBX

Lead Busses – Layer to Layer

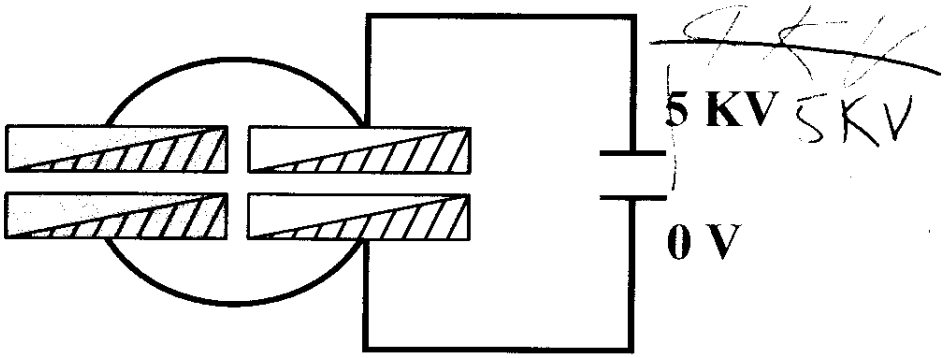

Figure 5.3-A

Measurement	Leakage (Max. 2μA)
Lead Busses - Layer to Layer	63 nA

STOP

Have Crew Chief verify setup and sign below before continuing.

Crew Chief — Date 8/16/05

Lead Busses – Across Corners 5KV

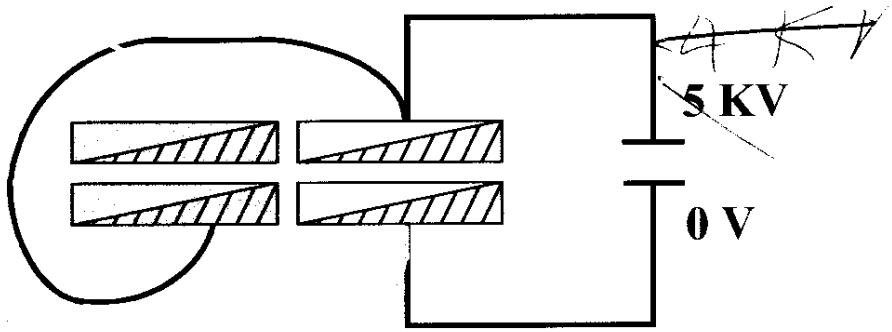

Figure 5.3-B

Measurement	Leakage (Max. 2μA)
Lead Busses - Across Corners	190 nA

Technician(s) — Date 8-16-05

Responsible Authority/Physicist — Date 19-DEC-2005

4KV

5.4 Hipot Correction Coil Busses to ~~5~~ KV as shown in Figure 5.4-A and 5.4-B. Max Leakage is 2 μA.

STOP

Have Crew Chief verify setup and sign below before continuing.

Crew Chief — Date: 8-16-05

Corrector Busses – Layer to Layer

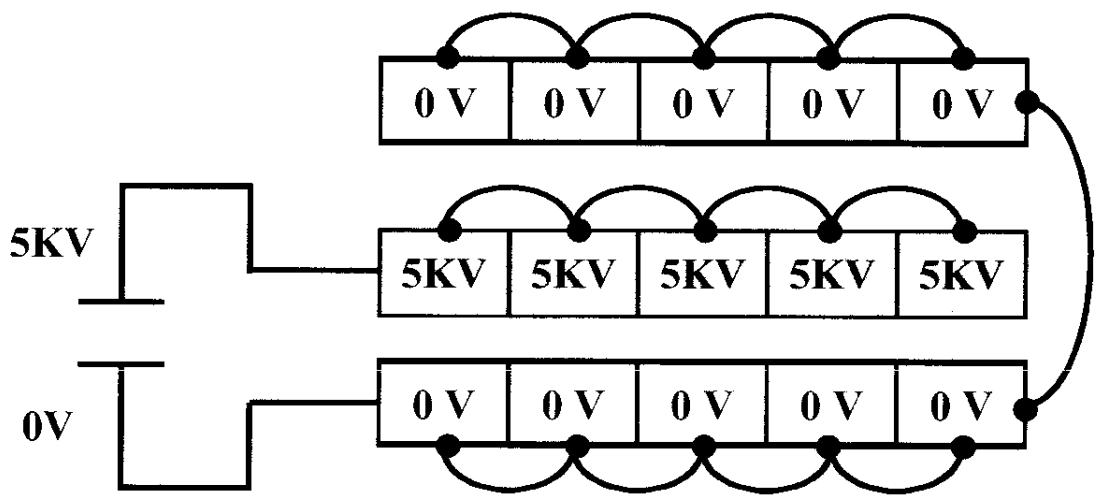

Figure 5.4-A

Measurement	Leakage (Max. 2μA)
Corrector Busses - Layer to Layer	105nA

Technician(s) — Date: 8-16-05

STOP

Have Crew Chief verify setup and sign below before continuing.

Crew Chief _____ Date 8-16-05

Corrector Busses – Across Corners

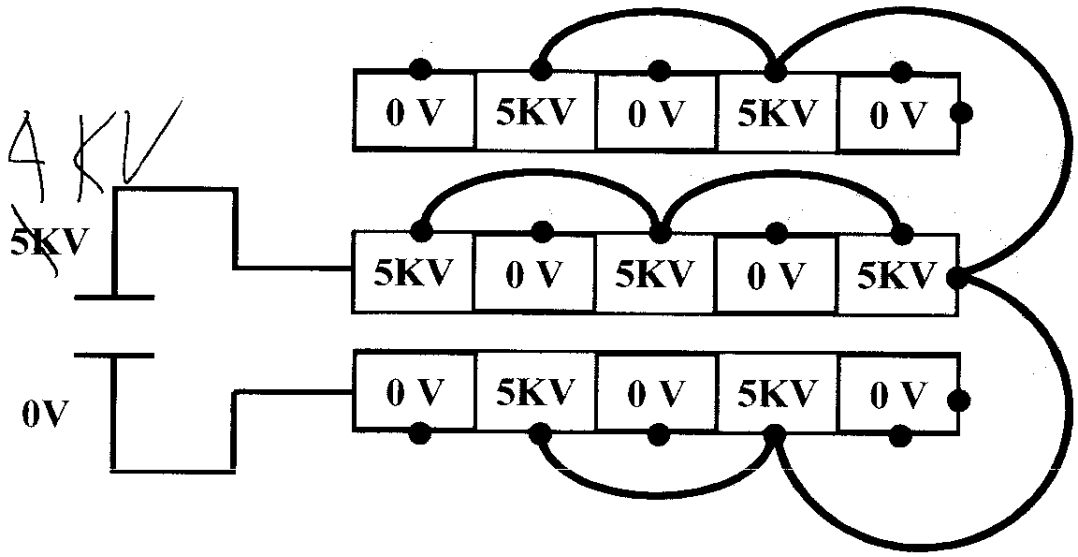

Figure 5.4-B

Measurement	Leakage (Max. 2μA)
Corrector Busses – Across Corners	3.44 nA

Technician(s) _____ Date 8-16-05

7.0 Electrical Inspection

7.1 Perform a Resistance Measurement of the Lead & Corrector Coil Bus Assembly (MD-430065).

Lead Busses

1	2
3	4

Looking from Lead End to Non-Lead End

Settings for the Valhalla 4300B: 20 mV – 10mA

Using the Valhalla 4300B, connect 10mA (@ 20 mV) applied voltage thru the Lead Busses.

Component	Measurement
Lead Bus #1	.00374 Ω
Lead Bus #2	.0102 Ω
Lead Bus #3	.0095 Ω
Lead Bus #4	.0089 Ω

Corrector Busses

1	2	3	4	5
6	7	8	9	10
11	12	13	14	15

Looking from Lead End to Non-Lead End

Settings for the Valhalla 4300B: 2V - 1A

Using the Valhalla 4300B, connect 10mA (@ 20 mV) applied voltage thru the Lead Busses.

Component	Measurement
Corrector Bus #1	.0632 Ω
Corrector Bus #2	.0640 Ω
Corrector Bus #3	.0 0628 Ω
Corrector Bus #4	.0630 Ω
Corrector Bus #5	.0633 Ω
Corrector Bus #6	.0830 Ω
Corrector Bus #7	.0817 Ω
Corrector Bus #8	.0810 Ω
Corrector Bus #9	.0812 Ω
Corrector Bus #10	~~.0805~~ .0820 Ω
Corrector Bus #11	.0814 Ω
Corrector Bus #12	.0808 Ω
Corrector Bus #13	.0820 Ω
Corrector Bus #14	.0822 Ω
Corrector Bus #15	.0820 Ω

Technician(s)

11/02/05
Date

LHC Serial No.: LMQXC07-1«ReworkID»

Notes: Re-issued per DR No. 4304 and TRR No. 1779.

STOP

7.2 Verify that the Readings in Step 7.1 are acceptable.
Approved for next Major Assembly Procedure.

Responsible Authority/Physicist — Date: 11/2/05

7.3 Hipot Lead Busses to 5 kV as shown in figures 7.3-A and 7.3-B. Max Leakage is 2 μA.

STOP

Have Crew Chief verify setup and sign below before continuing.

Crew Chief — Date: 11/2/05

Hipot - Lead Busses to each other

View of bus looking from Lead End to Non-Lead End

Lead Busses – Layer to Layer

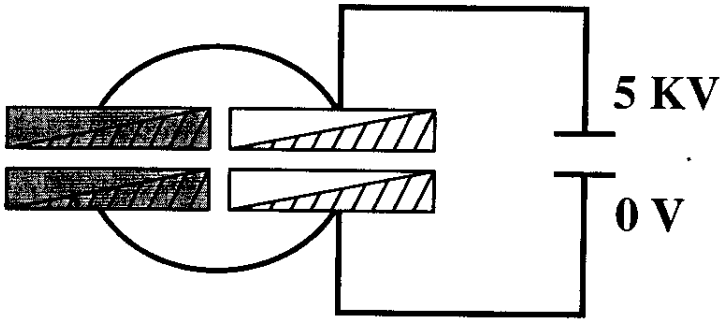

Figure 7.3-A

Measurement	Leakage (Max. 2μA)
Lead Busses - Layer to Layer	107 nA

STOP

Have Crew Chief verify setup and sign below before continuing.

Crew Chief _____ Date 11/2/05

Lead Busses – Across Corners

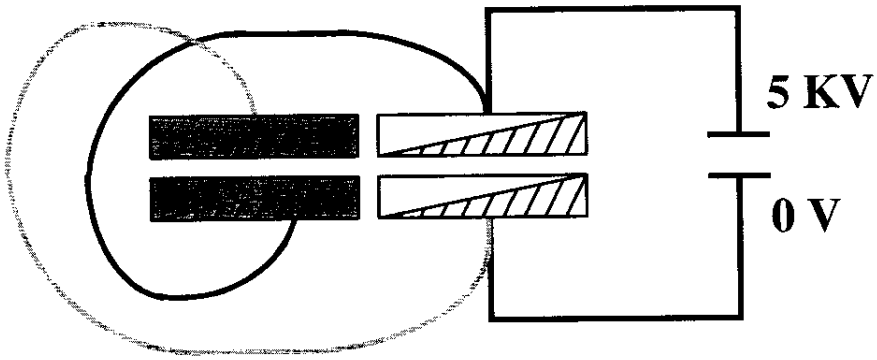

Figure 7.3-B

Measurement	Leakage (Max. 2μA)
Lead Busses - Across Corners	97nA

Technician(s) _____ Date 11/02/05

STOP

Responsible Authority/Physicist _____ Date 11/2/05

7.4 Hipot Correction Coil Busses to 4 KV as shown in Figure 7.4-A and 7.4-B. Max Leakage is 2 μA.

STOP

Have Crew Chief verify setup and sign below before continuing.

Crew Chief _____ Date 11-2-05

Corrector Busses – Layer to Layer

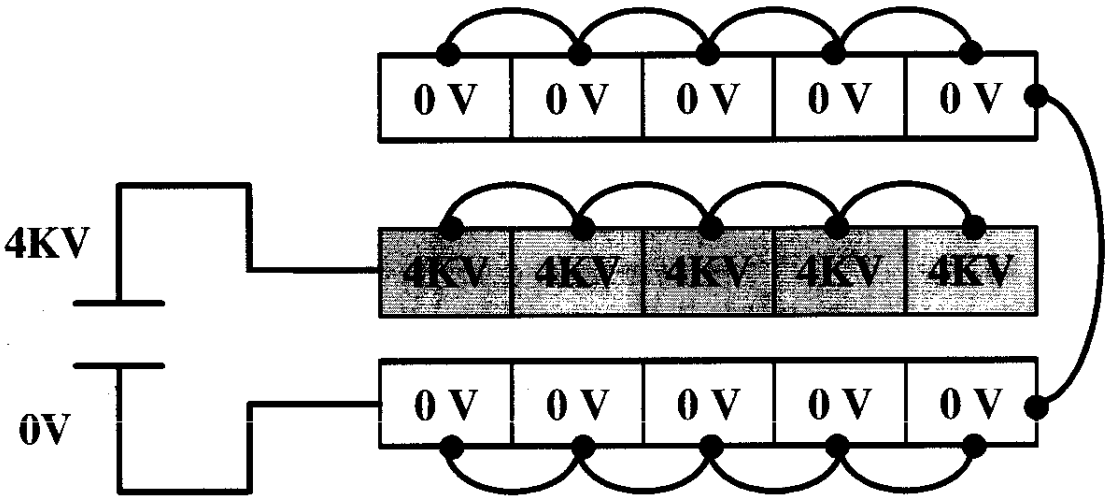

Figure 7.4-A

Measurement	Leakage (Max. 2μA)
Corrector Busses - Layer to Layer	67 nA

Technician(s) _____ Date 11/02/05

STOP

Responsible Authority/Physicist _____ Date 11/2/05

STOP

Have Crew Chief verify setup and sign below before continuing.

Crew Chief _____ Date 11-2-05

Corrector Busses – Across Corners

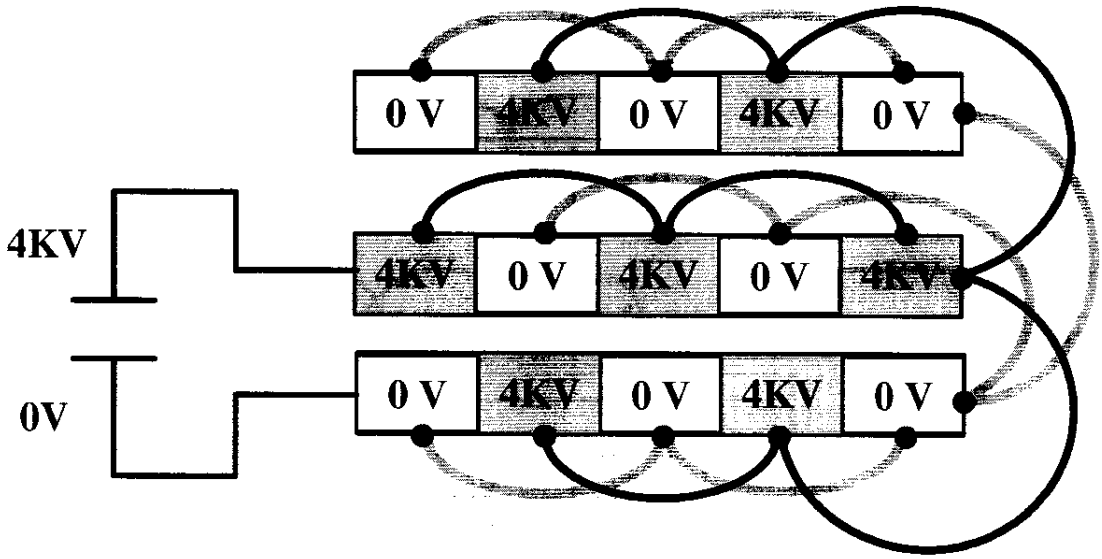

Figure 7.4-B

Measurement	Leakage (Max. 2μA)
Corrector Busses – Across Corners	205nA

Technician(s) _____ Date 11/02/05

7.0 Q3 Cold Mass Alignment

7.1 Rotate the Q3 Cold Mass, with the Power Leads facing up, into the proper orientation as shown in Figure 7.1-A.

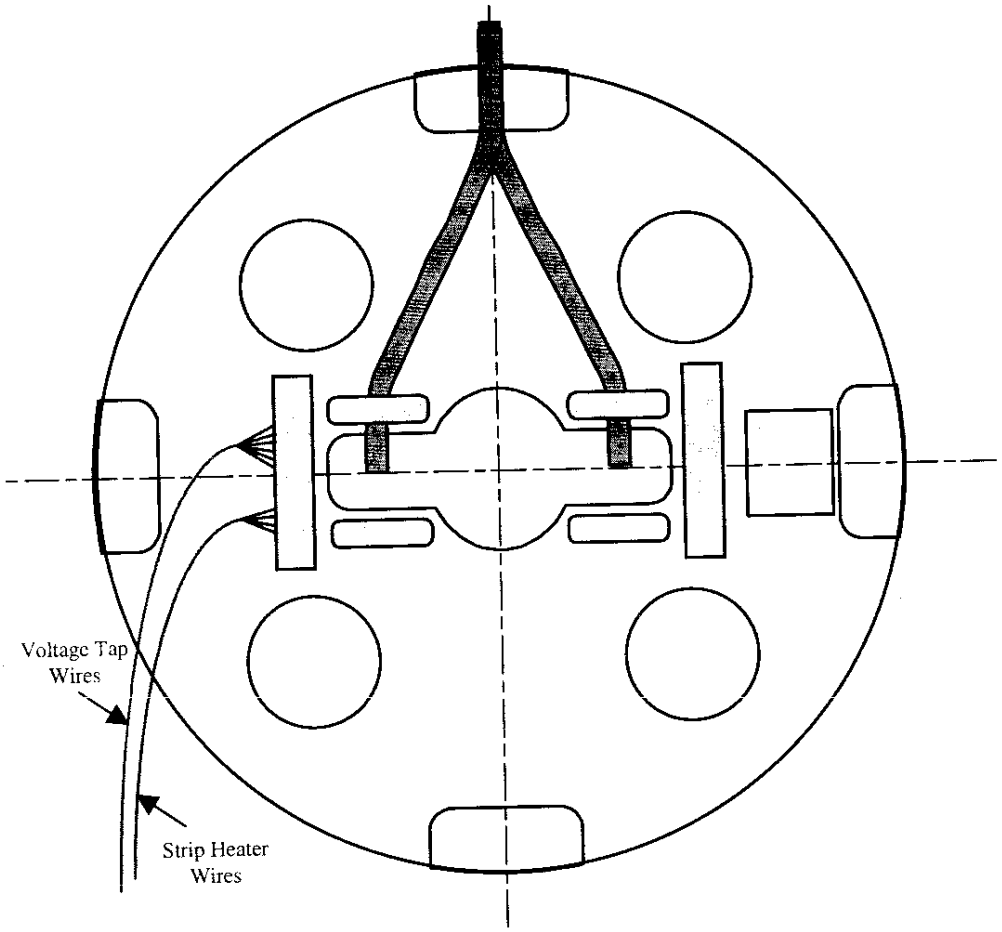

Looking at Lead End of Q3

Figure 7.1-A

O. Fi ay
Technician(s)

8/15/05
Date

7.2 Perform a stretched wire measurement of the system to align the Cold Mass within ± .2 mR.

Responsible Authority/Physicist

8/15/05
Date

8.0 Instrumentation Installation

8.1 Prepare Q3 Instrumentation Wire Feed thru (MB-430074). Build per Q3 Module Assembly Instrumentation Wire Feed thru (ME- 430074). Wire Labels and descriptions are shown in Figure 8.1 and per (MB-430074).

Note(s):

USE ONLY CERN LABELS ON WIRES.

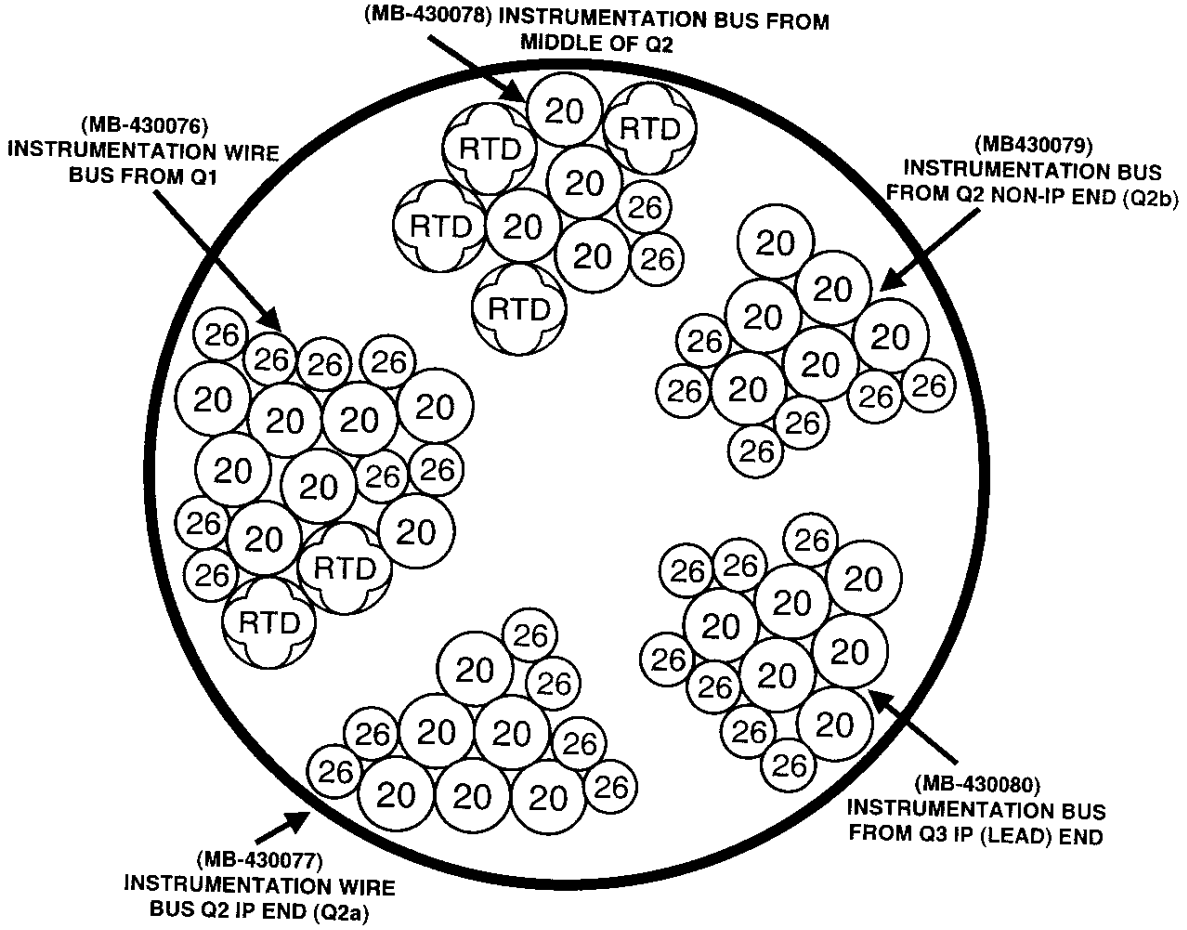

Figure 8.1
INSTRUMENTATION TUBE

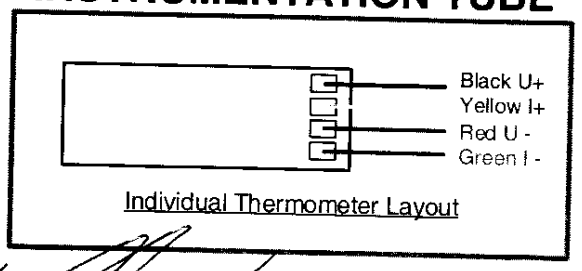

Technician(s) _____ Date 9/8/05

8.2 Slide Instrumentation Bus Assembly (MB-430074) into the proper Q3 Port as per Q3 Module Assembly (ME-369900). Verify that there is sufficient slack in cable to allow for two inches of differential thermal contraction.

Technician(s) Date 9/8/05

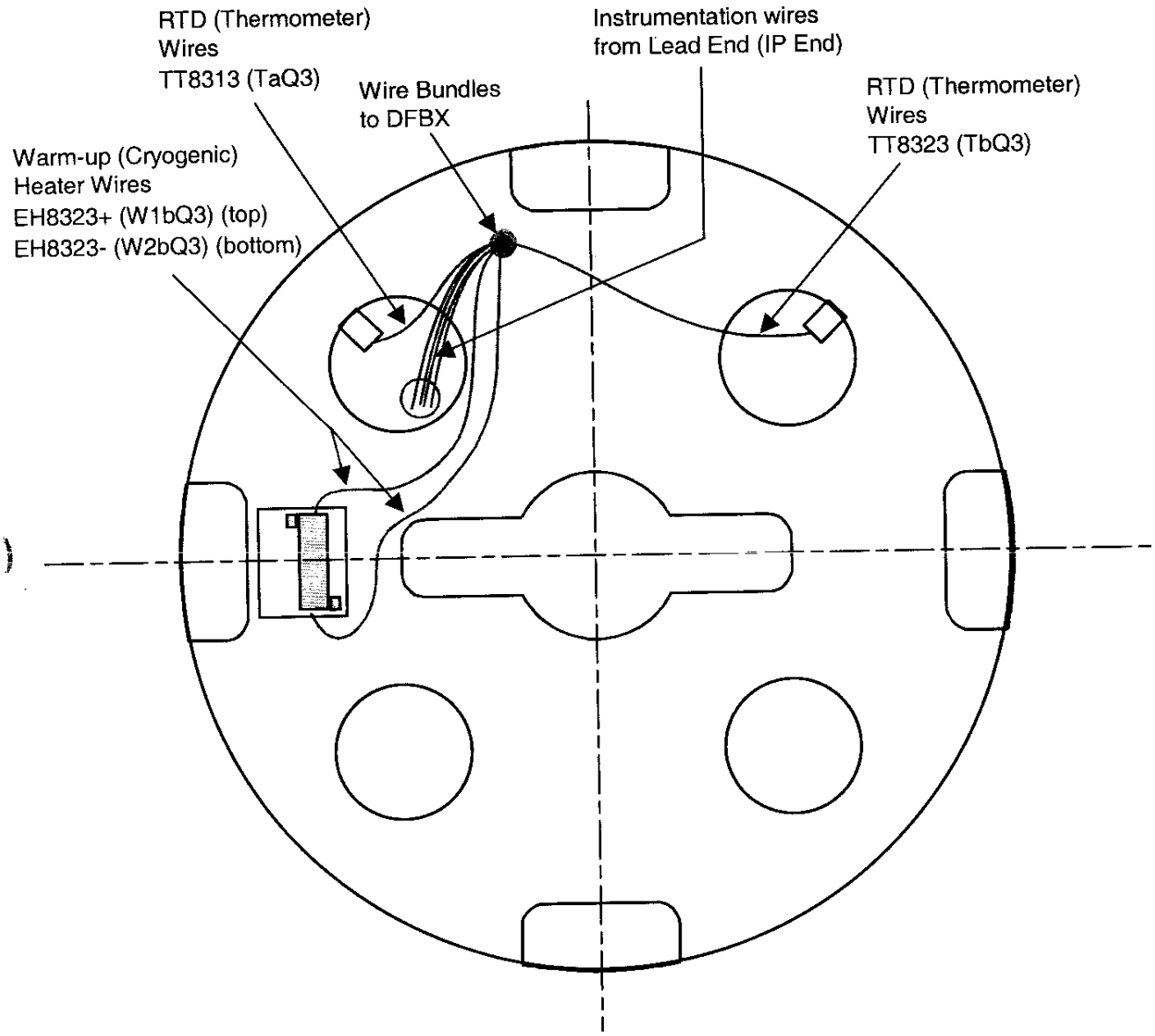

Looking at Non-Lead End (Non-IP End) of Q3

Figure 8.2-A

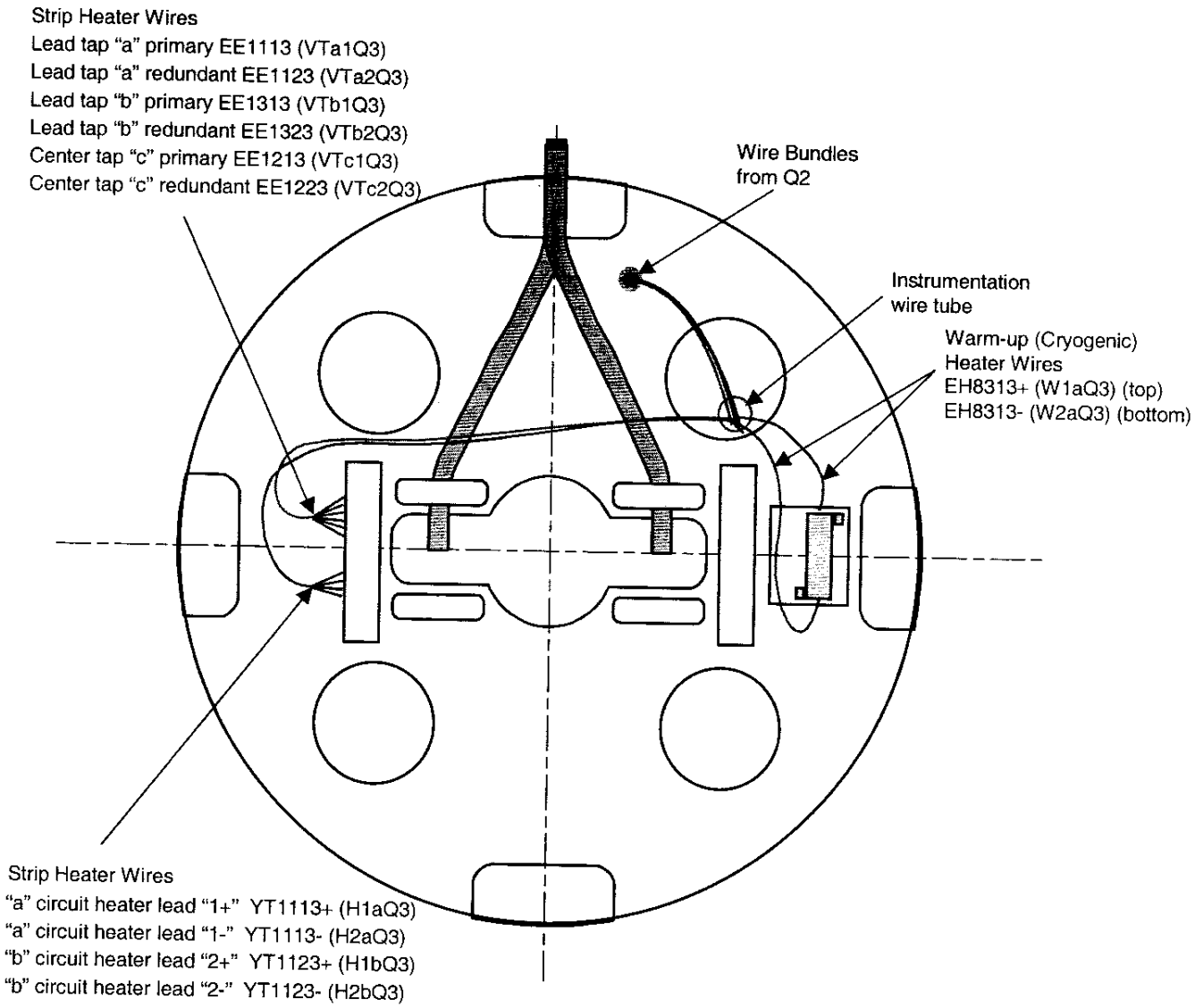

Looking at Lead End (IP end) of Q3

Figure 8.2-B

8.3 Weld Warm-up Heater Base Plates (MA-369997) and RTD Mount Blocks to End Plates as per Q3 Module Assembly (ME-369900).

Weldor(s) _____ Date 9/19/05

8.4 Install Warm-up Heaters (ME-369834) to each end of Q3 as per Q3 Module Assembly (ME-369900).

8.4.1 Install Warm-up Heaters (MA-369834) onto the Warm-up Heater Base Plate (MA-369997).

8.4.2 Solder wires (MA-369832) to the Warm-up Heaters as per (ME-369900).

Technician(s) _____ Date 9/9/05

8.5 Install RTD's as per Q3 Module Assembly (ME-369900). Record Serial Numbers of each RTD in the table below. Attach Data Sheet for each RTD to traveler.

8.5.1 Attach RTD's (MA-369835) (Qty. 4) to Mounting Blocks as per Q3 Module Assembly (ME-369900).

8.5.2 Solder wires (MA-369836) to RTD's as per Q3 Module Assembly (ME-369900). Individual RTD wiring is shown in Figure 8.5.2-A below.

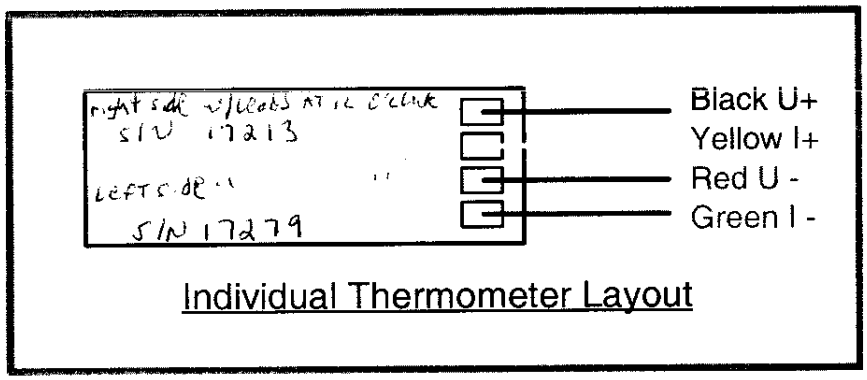

Figure 8.5.2-A

Technician(s) _____ Date 9/9/05

8.6 Perform a continuity check on all RTD's and Warm-Up Heaters. Record the Data below. (1mA). Record the resistance data from the Manufacturer's Traveler below. Compare RTD resistance test results to the resistance results from the Manufacturer's Traveler. Ensure RTD resistances are within **5Ω**. Attach the Manufacturer's RTD papers at the end of this traveler.

To measure the resistance of a Thermometer (RTD):

1. Use Hewlett Packard HP3457A digital multimeter.
2. Record temperature of building within +/- 5 degrees.
3. Press line button to turn line on.
4. Connect wires as shown in Figure below.
5. Push blue button (function key) once.
6. Push OHMF button.
7. Verify arrow in readout is above the 4WΩ (meaning a 4 wire resistance measurement).
8. Read resistance in ohms and record in traveler.

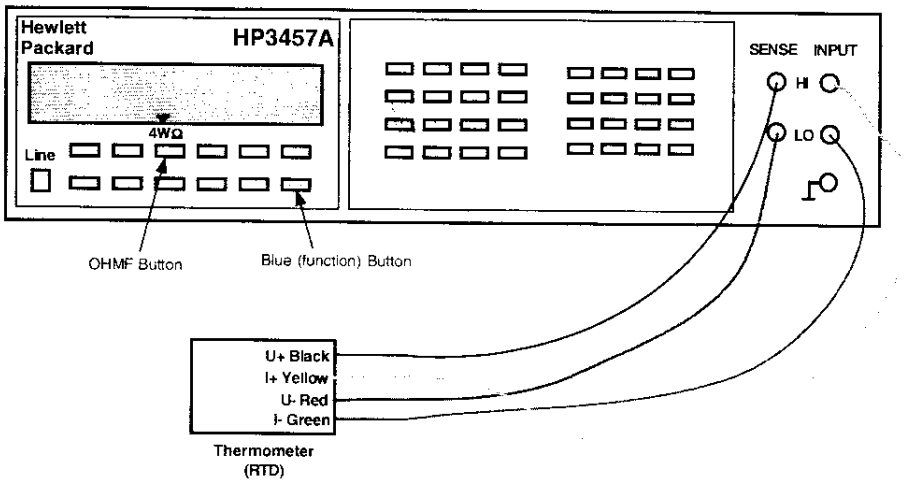

RTD'S				
Building Temperature: 75° F			Time of Test: 13:40	
Serial No.	Location	Wire No.	Measured Ω	Mfr. Ω (expedition)
CX-LS-X17279	Q3 Inst. Bus Side	TT8313	71.405	69.263
CX-LS-X17213	Q3 Inst. Non-Bus Side	TT8323	64.784	62.961

Cryogenic (Warm-up) Heaters		
Building Temperature: 75°F		Time of Test: 13:30
Location	Wire No	Measured Ω
Q3 Lead End (IP End)	EH8313+	16.545 Ω
	EH8313-	
Q3 Non-Lead End (Non-IP End)	EH8323+	16.213 Ω
	EH8323-	

E. [illegible]
Technician(s)

9-8-05
Date

Cryogenic Thermometer Traveller

DESCRIPTION

Part description:	Cryogenic thermometer	**Top Assembly Identification:**	
Part Identification:	HCQITESCXT-CR013430		
Serial Number:	CX_LS_X17213	**Manufactured By:**	Fermilab

CABLING

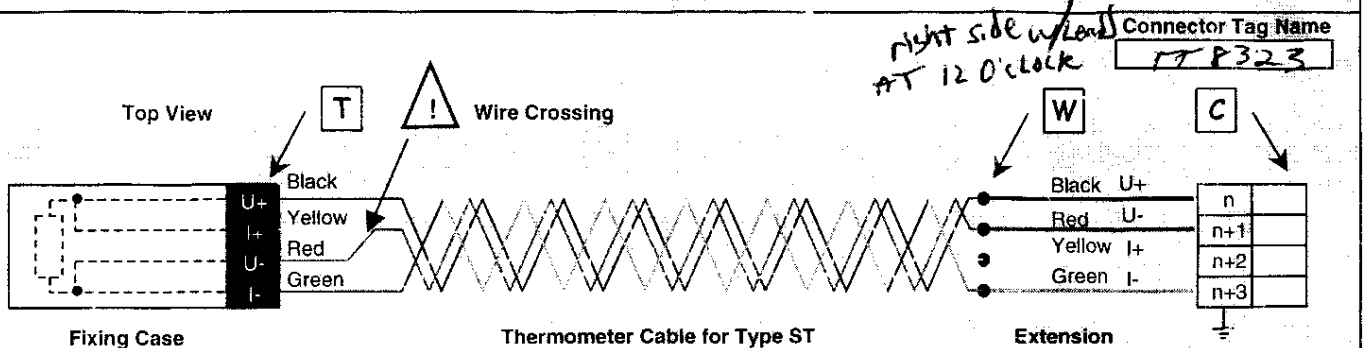

Fixing Case

Thread ☐
Hole ☐
Stud ☐

Thermometer Cable for Type ST

ρ (300 K) = 0.32 Ohm/m
Copper AWG 30
Length = ☐ m

Extension

ρ (300 K) = 0.07 Ohm/m
Copper AWG 2
Length: 0.8 m

CHECKS

Intervention	Date/ DD-MMM-YYYY	Check Point	R(U+,U-,I+,I-) [Ohm] 4W	R(U-,I-) [Ohm] 2W	R(U+,I+) [Ohm] 2W	R(U+,GND) [Ohm] 2W	Temperature [K]	Firm/Laboratory	Checked by
Calibration	*04-Feb-2002*	T	*64.7*	*n.a*	*n.a*	*OVL*	*Ambient*	*IPN*	*Joly*
Expedition	*12-Mar-2003*	T	*62.961*	*0.1*	*0.1*	*OVL*	*293*	*CERN*	*Grivat*
Reception	19-SEPT-2005	T W C	64.784				75°F	FNAL	[illegible]
		T W C							
		T W C							
		T W C							
		T W C							
		T W C							
		T W C							
		T W C							
		T W C							
		T W C							
		T W C							
		T W C							
		T W C							
		T W C							
		T W C							
		T W C							
		T W C							
		T W C							
		T W C							
		T W C							
		T W C							
		T W C							
		T W C							
		T W C							

Cryogenic Thermometer Traveller

DESCRIPTION

Part description:	Cryogenic thermometer	**Top Assembly Identification:**	
Part Identification:	HCQITESCXT-CR013800	**Manufactured By:**	Fermilab
Serial Number:	CX_LS_X17279		

CABLING

Connector Tag Name TT-8313

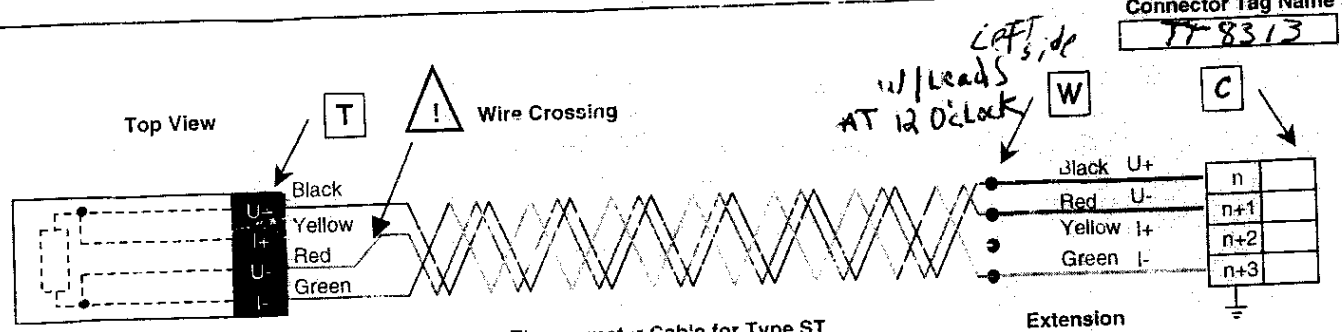

Fixing Case

Thread ☐
Hole ☐
Stud ☐

Thermometer Cable for Type ST

ρ (300 K) = 0.32 Ohm/m
Copper AWG 30
Length = ☐ m

Extension

ρ (300 K) = 0.07 Ohm/m
Copper AWG 24
Length: 0.8 m

CHECKS

Intervention	Date/ DD-MMM-YYYY	Check Point	R(U+,U-,I+,I-) [Ohm] 4W	R(U+,I-) [Ohm] 2W	R(U+,I+) [Ohm] 2W	R(U+,GND) [Ohm] 2W	Temperature [K]	Firm/Laboratory	Checked by
Calibration	04-Feb-2002	T	71.29	n.a	n.a	OVL	Ambient	IPN	Joly
Expedition	12-Mar-2003	T	69.263	0.1	0.1	OVL	293	CERN	Grivat
Reception	14-SEPT-2005	T W C	71,405				75°F	Fermi	[illegible]
		T W C							
		T W C							
		T W C							
		T W C							
		T W C							
		T W C							
		T W C							
		T W C							
		T W C							
		T W C							
		T W C							
		T W C							
		T W C							
		T W C							
		T W C							
		T W C							
		T W C							
		T W C							
		T W C							
		T W C							
		T W C							
		T W C							
		T W C							

8.7 Hipot RTD's to 100V. Use Droege Serial No. 910 (FNAL Part No. 51330) or equivalent. (Max. Leakage < 0.1 μA)

STOP

Have Crew Chief verify setup and sign below before continuing.

Crew Chief _____ Date 9/19/05

RTD'S		
Building Temperature: 75° F		**Time of Test:** 3:05 am
Serial No.	**Location**	**Hipot Leakage < 0.1 μA**
TT8313	Q3 Inst. Bus Side	yes
TT8323	Q3 Inst. Non-Bus Side	yes

Hipot Cryogenic (Warm-up) Heaters to 300V. Use Droege Serial No. 910 (FNAL Part No. 51330) or equivalent. (Max. Leakage < 0.1 μA)

STOP

Have Crew Chief verify setup and sign below before continuing.

Crew Chief _____ Date 9/19/05

Warm-up Heaters		
Building Temperature: 75°		**Time of Test:** 3:10 am
Location	**Wire No**	**Hipot Leakage < 0.1 μA**
Q3 Lead End (IP End)	**EH8313+**	yes
	EH8313-	
Q3 Non-Lead End (Non-IP End)	**EH8323+**	yes
	EH8323-	

Technician(s) _____ Date 9-20-05

8.8 Fill out the Cryogenic Thermometer Traveller that came with the RTD.
Fill out:

- Corrector Tag Name
- Date
- Resistance Measurement
- Temperature (i.e. 77° F)
- Firm/Laboratory (Fermi)
- Checked By (Print Last Name)

Once all information has been filled out, make a copy of the Cryogenic Thermometer Traveller and place the copy in the designated binder.

Technician(s) _____ Date 9-20-05

STOP

Crew Chief _____ Date 9-23-05

8.9 Mount the MCBXA Corrector Mounting Ring (ME-390037) to the MCBXA Corrector Magnet.

Technician(s) _____ Date 9-23-05

8.10 Position and align the MCBXA Corrector Magnet using corrector ~~Pre-alignment plates and data obtained in Step 4.0.~~ LEVELING FIXTURE

Technician(s) _____ Date 9 23 05

8.11 Verify alignment of MCBXA Corrector Magnet as per Q3 Module Assembly (ME-369900).

STOP

Crew Chief _____ Date 10-20-05

8.12 Tack weld the MCBXA Corrector Mounting Ring (ME-390037) to the Q3 Cold Mass Assembly (ME-390528) per Q3 Cold Mass Welded Assembly (ME-390529).

Weldor _____ Date 10/20/05

8.13 Weld the MCBXA Corrector Mounting Ring (ME-390037) to the Q3 Cold Mass Assembly (ME-390108) Non-Lead End per Q3 Cold Mass Welded Assembly (ME-390529).

Weldor _____ Date 10/21/05

8.14 Splice the Cold Mass voltage taps to the wire bundle.

Technician(s) G. Eddy Date 9/14/2005

8.15 Verify the splices electrically:

Test of Q3 Fixed Voltage Taps

Apply 1A current between BUS #1 & BUS #2 on the Feed End (See Figure 7.15-A)

1. Clamp Bus #1 to Bus #2 on Return End.
2. Connect Current Source: BUS #1 to Positive and BUS #2 to Negative.

Use a 3457 or equivalent Digital Voltmeter and record measurement to four decimal places.

Use the Two-Wires Voltage Measurement Technique:

1. Connect Digital Voltmeter LO wire to BUS#2 (or Negative output of Power source).
2. HI wire of Digital Voltmeter will move through wires to measure V.

DO NOT USE DC CURRENT LARGER THAN 2A.

DO NOT APPLY CURRENT THROUGH MAGNET LONGER THAN 30MIN.

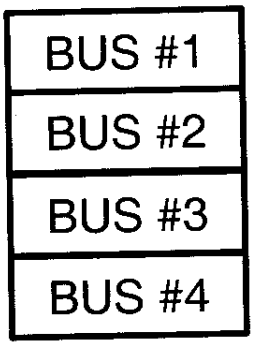

Power Bus Location Return End

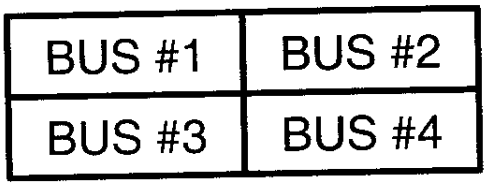

Power Bus Location Feed End

Figure 8.15-A

HYPERTRONICS CONNECTOR		FNAL Labels	Description	Wire Labels	Expected Voltage,V	Measured
Module	Pin					
NA	NA	VTa1Q3	Q3 Lead Voltage Tap "a", primary	EE1113	7.0000	6.966V
NA	NA	VTa2Q3	Q3 Lead Voltage Tap "a", redundant	EE1123	7.0000	6.967V
NA	NA	VTb1Q3	Q3 lead Voltage Tap "b", primary	EE1313	0.0030	.0029V
NA	NA	VTb2Q3	Q3 Lead Voltage Tap "b" redundant	EE1323	0.0030	.0029V
NA	NA	VTc1Q3	Q3 Center Voltage Tap "c", primary	EE1213	3.5000	3.4917V
NA	NA	VTc2Q3	Q3 Center Voltage Tap "c", redundant	EE1223	3.5000	3.4918V

Across BUS #1 and BUS #2:	6.975V

G. Eddy
Technician(s)

9/15/2005
Date

Protection Strip Heaters

Measure resistance across each heater using a handheld meter.

Module	Pin	Breakout BOX Labels	Expected Resistance, OHM	Measured Resistance, OHM	FNAL Label	Description
NA	NA	YT1113+	30	28.88 Ω	H1aQ3	Q3 Protection (Strip) Heater, ("a" circuit) (CERN lead #1+)
NA	NA	YT1113-			H2aQ3	Q3 Protection (Strip) Heater, ("a" circuit) (CERN lead #1-)
NA	NA	YT1123+	30	28.82 Ω	H1bQ3	Q3 Protection (Strip) Heater, ("b" circuit) (CERN lead #1+)
NA	NA	YT1123-			H2bQ3	Q3 Protection (Strip) Heater, ("b" circuit) (CERN lead #1-)

G. Eddy
Technician(s)

9/15/2005
Date

8.16 Attach wires using putty and install the Voltage Tap Splice Cover Block (MC-430146).

Technician(s) _____ Date 9-22-05

8.17 Mount the MQSX Corrector Mounting Ring (MD-390209) to the MQSX Corrector Magnet.

Technician(s) _____ Date 9-22-05

8.18 Position and align the MQSX Corrector Magnet (ME-390529) using corrector Pre-alignment plates and data obtained in Step 4.0 per Q3 Cold Mass Welded Assembly.

Technician(s) _____ Date 10-20-05

8.19 Verify alignment of MQSX Corrector Magnet as per Q3 Module Assembly (ME-369900).

STOP

Crew Chief _____ Date 10-20-05

8.20 Tack weld the MQSX Corrector Mounting Ring (MD-309209) to the Q3 Cold Mass Assembly (ME-390528) per Q3 Cold Mass Welded Assembly (ME-390529).

Weldor _____ Date 10/20/05

8.21 Weld the MQSX Corrector Mounting Ring (MD-309209) to the Q3 Cold Mass Assembly (ME-390528) Lead End per Q3 Cold Mass Welded Assembly (ME-390529).

Weldor _____ Date 10/20/05

9.0 Installation of MQSX Corrector Coil

9.1 At the IP End, set up the Power Leads for splicing as shown in the Q3 Module Assembly Drawing (ME-369900).

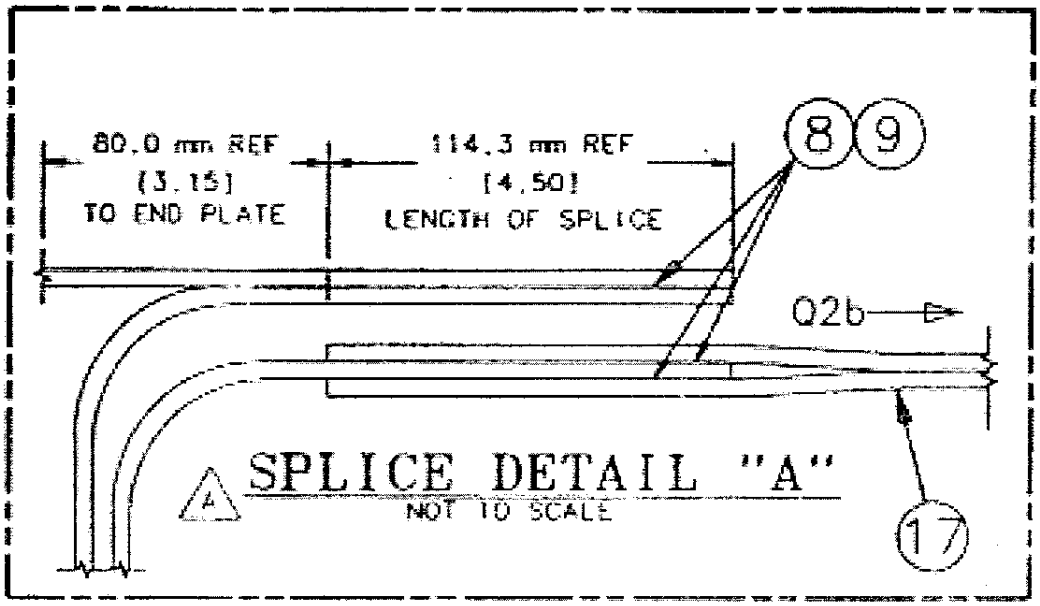

Figure 9.1-A
(ME-369900, Sheet 3 of 5)

Technician(s) _____ Date 10-4-05

9.2 Construct / Obtain Expansion Loop Tail per Q3 Module Assembly Insulated Expansion Loop Tail (MB-430145).

Technician(s) _____ Date 10-24-05

9.3 Solder the Lower Lead to the expansion Loop Tail from Step 9.2 as per Q3 Module Assembly Drawing (ME-369900).

Technician(s) _____ Date 10-24-05

9.4 Solder the Upper Magnet Lead (Terminal "A", Quadrant 4) to the Lower 8kA Bus as per Q3 Module Assembly Drawing (ME-369900).

Technician(s) _____ Date 10-24-05

9.5 Insulate each splice with 2/3 overlap, .002 x 3/8 wide Kapton, (MA-292722).

Technician(s) _____ Date 10/27/05

9.6 Insert a piece of .005 Kapton between splices.

Technician(s) _____ Date 10/27/05

9.7 Put splices together and insulate splice area with ¾ overlap, .002 x 3/8 wide Kapton (MA-292722).

Technician(s) _____ Date 10/27/05

9.8 Attach Q3 Bus Splice Clamp Assembly (MD-430031) to Q3 Lead as per Q3 Module Assembly (ME-369900).

Technician(s) _____ Date 10/27/05

9.9 Attach IP (Lead) End Buss Crossover Block Assembly (MD-430095) as per Q3 Module Assembly (ME-369900).

Technician(s) _____ Date 11-3-05

9.10 Attach Cable Clamp Assemblies as per Q3 Module Assembly (ME-369900).

Technician(s) _____ Date 11-3-05

9.11 Solder MQSX Corrector Wires per Q3 Module Assembly (ME-369900) and as shown in Figure 9.12-A.

Technician(s) _____ Date 11-3-05

9.12 Install voltage taps on MQSX corrector leads. One tap is to be soldered to the "A" Lead of each corrector element. Wire label is shown below in Figure 9.12-A.

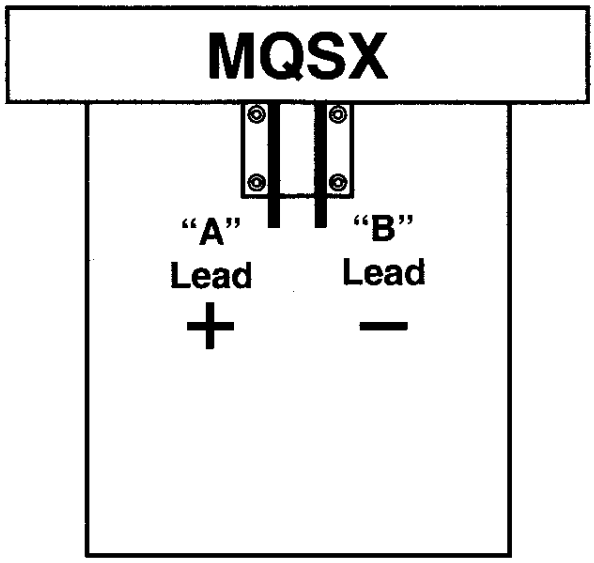

Overhead View

Figure 9.12-A

Corrector Assembly	Corrector Element	Label
MQSX	MQSX	A+ lead Q3A2 (skew quadrupole) voltage tap EE8223 (VTA2)

Technician(s) _____ Date _____

10.0 Final MCBXA Corrector Preparations

10.1 Route MCBXA Corrector Coil Wires as shown in Figure 10.1-A below and per Q3 Cold Mass Welded Assembly (ME-390529).

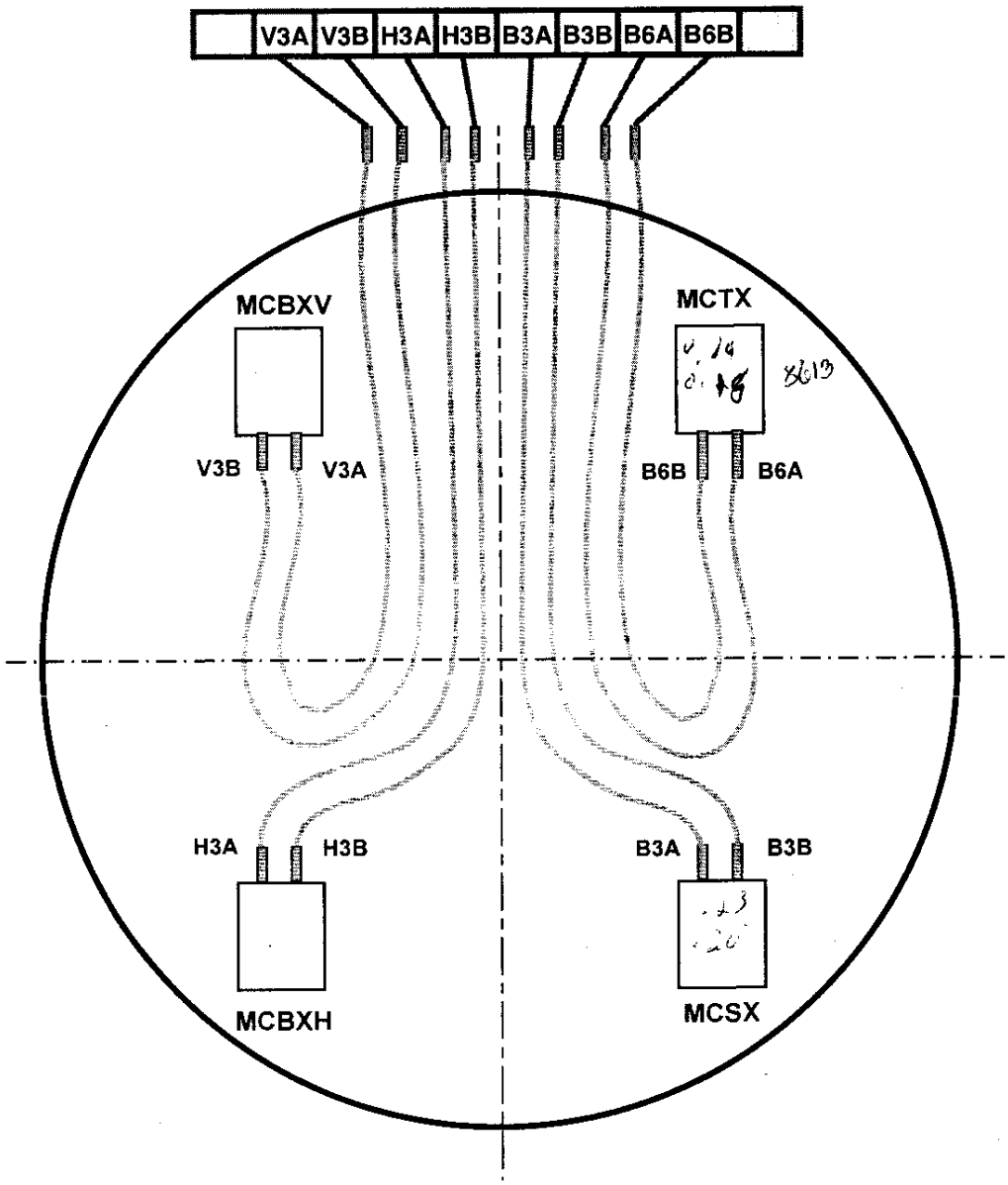

End View of MCBXA for Q3
(in "up" position)

Looking into end of correction coil from DFBX to Q3

Figure 10.1-A

Technician(s) [signature]

Date 9/19/05

10.2 Solder Corrector Wires per Q3 Module Assembly (ME-369900) and as shown in Figure 10.2-A.

Technician(s) _____ Date 9/19/05

10.3 Install voltage taps on MCBXA corrector leads. One tap is to be soldered to the "A" Lead of each corrector element. Wire labels are shown below.

Corrector Assembly	Corrector Element	Label
MCBXA	MCBXH	A+ lead Q3H3 (skew dipole) voltage tap EE8123 (VTH3)
	MCBXV	A+ lead Q3V3 (normal dipole) voltage tap EE8113 (VTV3)
	MCSX	A+ lead Q3B3 (normal sextupole) voltage tap EE8313 (VTB3)
	MCTX	A+ lead Q3B6 (normal dodecapole) voltage tap EE8613 (VTB6)

Technician(s) _____ Date 10/22/05

ADDED PAGE OF MCBXA
PART OF DR 4303

18.2 Using the Valhalla 4300B, connect 10mA applied voltage thru the corrector Power Leads. Measure Resistance and record in the table below. Record Initial resistance of Corrector Element and record below.

Corrector Bus Leads

	V3A	V3B	H3A	H3B	B3A	B3B	B6A	B6B	
	V2A	V2B	H2A	H2B	B4A	B4B	A4A	A4B	
	V1A	V1B	H1A	H1B	A2A	A2B	A3A	A3B	

(View Looking from DFBX into Q3)

Corrector Assembly	Corrector Element	Readout Labels		Power Labels I_{HI}	Power Labels I_{LO}	Resistance	Initial Resistance
MQSX	MQSX	A2A	EE8223	A2A	A2B		MQSX
		EE8223	A2B				
		A2A	A2B				
MCBXA	MCBXV	V3A	EE8113	V3A	V3B	.01	MCBXV
		EE8113	V3B			17.58	
		V3A	V3B			17.40	
	MCBXH	H3A	EE8123	H3A	H3B	.01	MCBXH
		EE8123	H3B			21.34	
		H3A	H3B			21.33	
	MCTX	B6A	EE8613	B6A	B6B	.01	MCTX
		EE8613	B6B			98.45	
		B6A	B6B			98.46	
	MCSX	B3A	EE8313	B3A	B3B	.03	MCSX
		EE8313	B3B			27.91	
		B3A	B3B			27.91	
MCSOX	MCOSX	A4A	EE8423	A4A	A4B		MCOSX
		EE8423	A4B				
		A4A	A4B				
	MCOX	B4A	EE8413	B4A	B4B		MCOX
		EE8413	B4B				
		B4A	B4B				
	MCSSX	A3A	EE8323	A3A	A3B		MCSSX
		EE8323	A3B				
		A3A	A3B				

Technician(s) _____ Date 10/21/05

18.3 Attach Backing Splines as per Q3 Module Assembly (ME-369900).

Technician(s) _____ Date _____

18.4 At the IP End (Lead End) wrap the Springboard Assemblies in Kapton and then wrap with Kevlar String (MA-369912) every ½ - ¾" over Kapton as per Q3 Module Assembly (ME-369900).

Technician(s) _____ Date _____

18.5 At the Non-IP End (Non-Lead End) wrap the Springboard Assemblies in Kapton and then wrap with Kevlar String (MA-369912) every ½ - ¾" over Kapton as per Q3 Module Assembly (ME-369900).

Technician(s) _____ Date _____

11.0 Final MCSOX Corrector Preparations

11.1 Mount the MCSOX Corrector Magnet to the MCSOX Corrector Mounting Ring (ME-390664).

Technician(s) _____ Date 10-23-05

11.2 Slide the MCSOX Corrector Magnet & MCSOX Corrector Mounting Ring (ME-390664) up to the MCBXA Corrector Magnet.

Technician(s) _____ Date 10-23-05

11.3 Position the MCSOX Corrector Magnet using corrector Pre-alignment plates and data obtained in Step 4.0

Technician(s) _____ Date 10-23-05

11.4 Verify alignment of MCSOX Corrector Magnet as per Q3 Module Assembly (ME-369900).

Crew Chief _____ Date 10/23/05

11.5 Position the MCSOX Corrector Magnet longitudinally. (The gap between the MCBXA Magnet and the Mounting Ring should be approximately 15mm.)

Technician(s) _____ Date 10-25-05

11.6 Tack weld MCSOX Corrector Mounting Ring (ME-390664) as per Q3 Cold Mass Welded Assembly (ME-390529).

Weldor(s) _____ Date 10/27/05

11.7 Weld the MCSOX Corrector Mounting Ring (ME-390664) as per Q3 Cold Mass Welded Assembly (ME-390529).

Weldor(s) _____ Date 10/27/05

12.0 Corrector Magnet Pre-Weld Alignment Procedures

12.1 Torque the MCBXA Corrector Magnet bolts to 500 in-lbs. per Note 4 of Q3 Cold Mass Welded Assembly (ME-390529). Shim between the Corrector and Flange as necessary.

Technician(s) _____ Date 10-26-05

12.2 Torque the MCSOX Corrector Magnet bolts to 500 in-lbs. per Note 4 of Q3 Cold Mass Welded Assembly (ME-390529). Shim between the Corrector and Flange as necessary.

Technician(s) _____ Date 10-26-05

12.3 Torque the MQSX Corrector Magnet bolts to 500 in-lbs. per Note 4 of Q3 Cold Mass Welded Assembly (ME-390529). Shim between the Corrector and Flange as necessary.

Technician(s) _____ Date 10-26-05

12.4 Verify all Correctors (MCBXA, MCSOX and MQSX) are aligned and ready for welding procedures.

- ☑ **MCBXA is ready for welding**
- ☑ **MCSOX is ready for welding**
- ☑ **MQSX is ready for welding**

STOP

Responsible Authority/Physicist _____ Date 10/01/11

12.5 Tack weld bolts and washers for mounting the MCBXA Corrector into place per Q3 Cold Mass Welded Assembly (ME-390529).

Weldor(s) _____ Date 10/27/05

12.6 Tack weld bolts and washers for mounting the MCSOX Corrector into place per Q3 Cold Mass Welded Assembly (ME-390529).

Weldor(s) _____ Date 10/27/05

12.7 Tack weld bolts and washers for mounting the MQSX Corrector into place per Q3 Cold Mass Welded Assembly (ME-390529).

Weldor(s) _____ Date 10/27/05

13.0 Wire the MCSOX Corrector Magnet

13.1 Attach the MCSOX Splice Plate Mounting Ring (ME-430129), the MCSOX Corrector Splice Face Plate (ME-430130), and the MCSOX Splice Plate Mounting Bars (ME-430128) as per Q3 Module Assembly (ME-369900).

Technician(s) _____ Date 11-4-05

13.2 Route wires as shown in figure below and per Q3 Module Assembly (ME-369900).

Technician(s) _____ Date 11-4-05

13.3 Solder Wires per Q3 Module Assembly (ME-369900) and Figure 13.0-A. (Next Page)

Technician(s) _____ Date 11-4-05

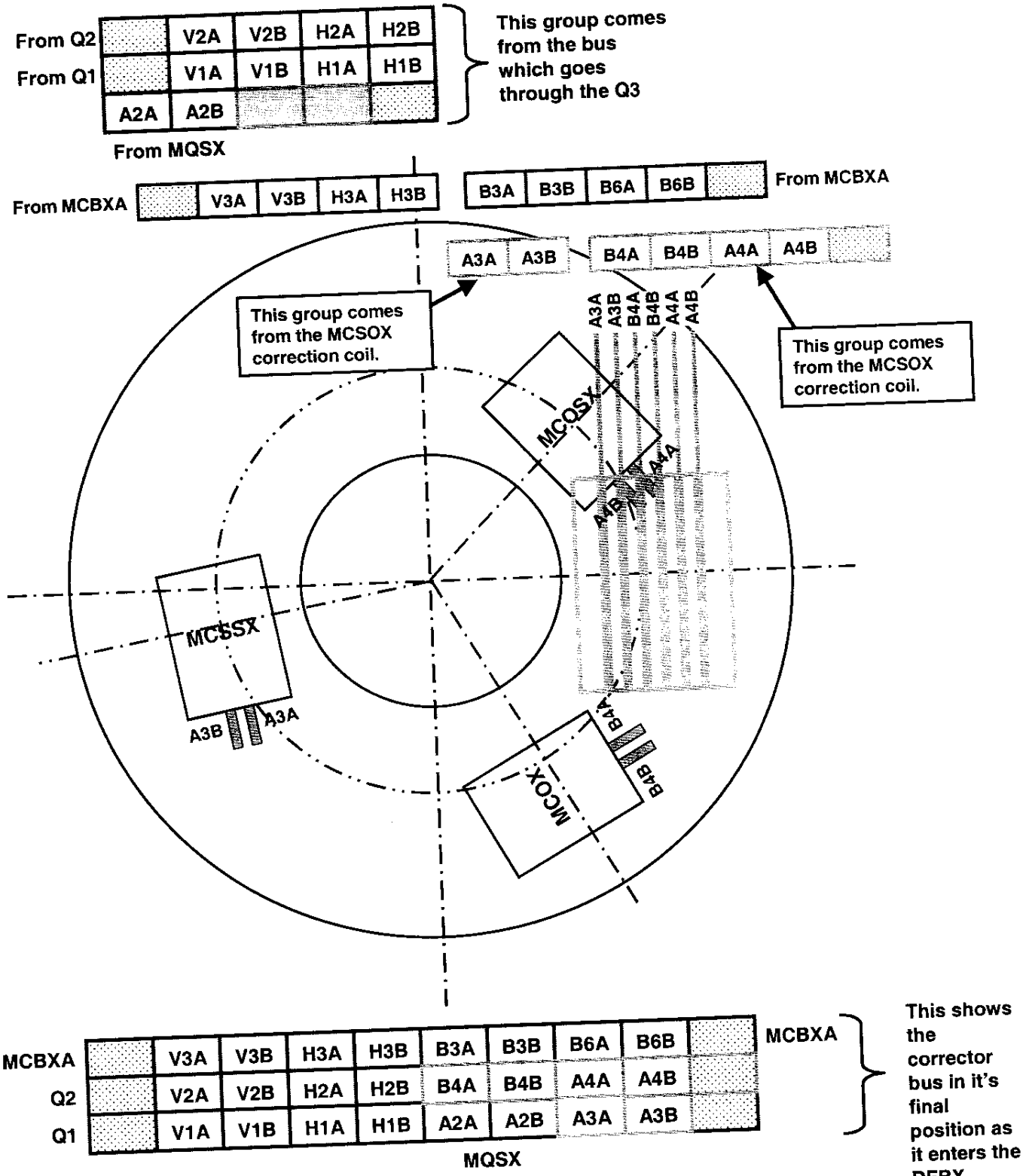

Looking into Non-IP End of Q3

Looking into end of correction coil from DFBX into Q3

Figure 13.0-A

13.4 Install voltage taps on MCSOX corrector leads. One tap is to be soldered to the "A" Lead of each corrector element. Wire labels are shown below.

Corrector Assembly	Corrector Element	Label
MCSOX	MCOSX	A+ lead Q3A4 (skew octupole) voltage tap EE8423 (VTA4)
	MCOX	A+ lead Q3B4 (normal octupole) voltage tap EE8413 (VTB4)
	MCSSX	A+ lead Q3A3 (skew sextupole) voltage tap EE8323 (VTA3)

Technician(s)

11-6-05
Date

14.0 Dome Setup

14.1 Attach IP End Dome (MD-390221) (Q3) to the End Dome Positioning Fixture (MD-369776).

Technician(s) _____ Date 11·10/05

14.2 Align IP End Dome (MD-390221) as shown in Q3 Cold Mass Welded Assembly (ME-390529).

Technician(s) _____ Date 11·10/05

14.3 Level the IP End Dome (MD-390221) using the Ball Socket (MD-369777) and the Mini Level.

Technician(s) _____ Date 11·10·05

14.4 Mark the IP End Dome (MD-390221) and the End Plate with a Horizontal Witness Line. This Step will be used in Step 13.3 to reposition the Domes prior to Welding.

Technician(s) _____ Date 11·10.05

14.5 Remove the IP End Dome (MD-390221) from the Tooling.

Technician(s) _____ Date 11·10·05

14.6 While feeding the electrical wires/bus through the proper ports, attach Non-IP End Dome (MD-390668) (Q3) to the End Dome Positioning Fixture (MD-369776).

Technician(s) _____ Date 11-10-05

14.7 Align Non-IP End Dome (MD-390668) as shown in Q3 Cold Mass Welded Assembly (ME-390529).

Technician(s) _____ Date 11-10-05

14.8 Level the Non-IP End Dome (MD-390668) using the Ball Socket (MD-369777) and the Mini Level.

Technician(s) _____ Date 11·10·05

14.9 Mark the Non-IP End Dome (MD-390668) and the End Plate with a Horizontal Witness Line. This Step will be used in Step 20.1 to reposition the Extension Tubes prior to Welding.

Technician(s) _____ Date 11·10·05

14.10 Remove the Non-IP End Dome (MD- 390668) from the Tooling.

Technician(s) _____ Date 11·10·05

14.11 Perform preliminary reference measurements before moving the Cold Mass to an Assembly Table.

Check one (Upper / Lower slash) and then record the reference measurement and Mini-level No.

Upper Slash ☑

Lower Slash ☐

Take measurement while looking from Non-Lead End toward the Lead End.

Reference Measurement: 146

Mini-level No. #2

Technician(s) _____ Date 11-10-05

STOP

T. Page

Responsible Authority/Physicist _____ Date 11/10/05

14.12 Move the Cold Mass to an Assembly Table.

Technician(s) _____ Date 11-10-05

DR4304

15.0 Splicing the Power Leads

15.1 Route Cable and Corrector Leads on IP (Lead) End as shown below and per Q3 Module Assembly (ME-369900).

Lead Bus Orientation through Q3

R. Bossert 3-29-04

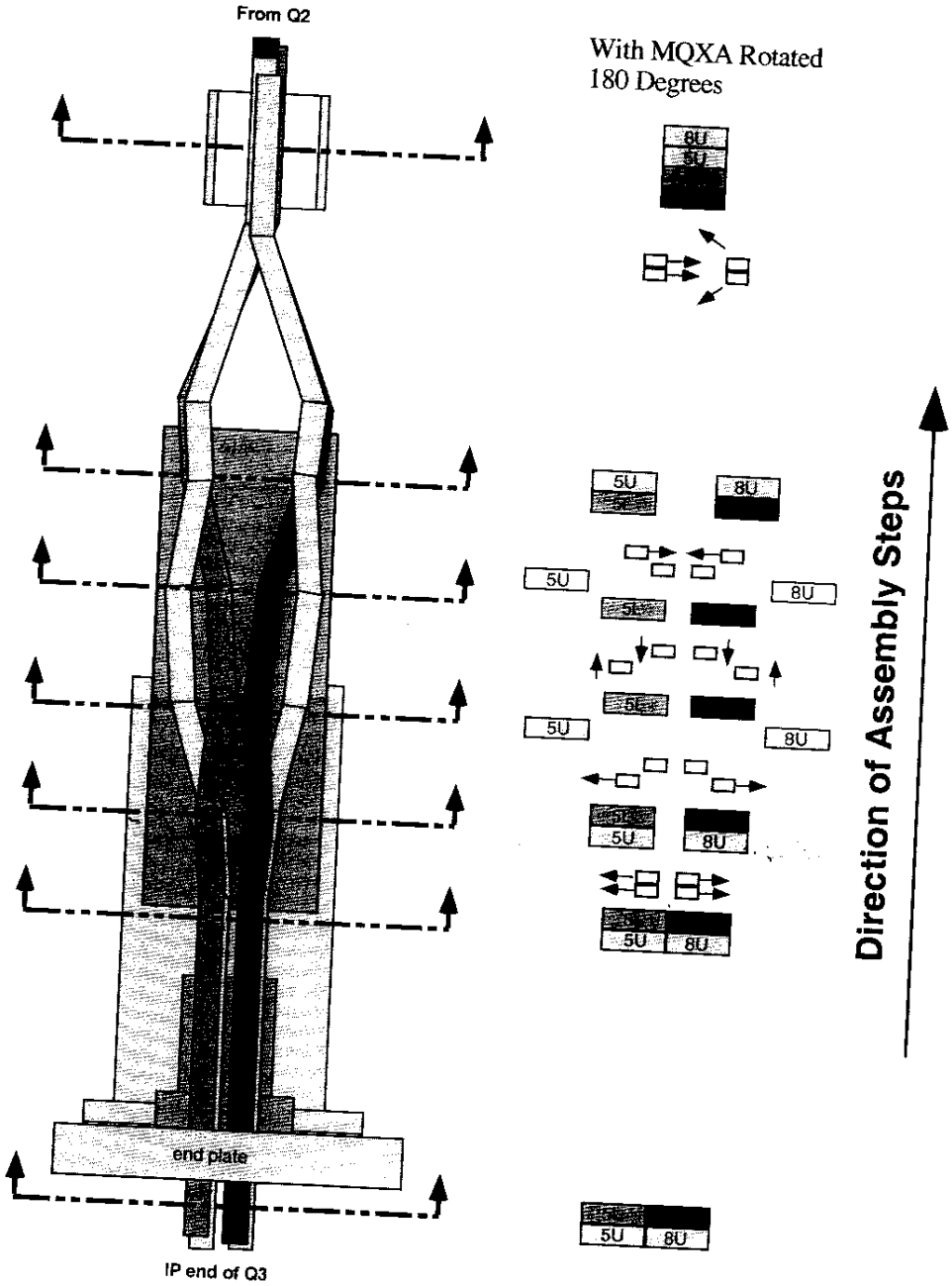

Figure 15.1-A

Technician(s)

11-1-05
Date

3.0 Q3 Module Verification

3.1 Record the serial number for each Magnetic Component Assembly.

Q3 Serial Number: _____

MCBXA Corrector Coil Serial Number: _____

MQSX Corrector Coil Serial Number: _____

MCSOX Corrector Coil Serial Number: _____

_____ _____
Responsible Authority/Physicist Date

3.2 Attach the Certificate of Conformity, for vendor supplied components, and the Quality Record, for vendor supplied components, to this traveler.
Verify that the Certificate of Conformity and /or the Quality Record (as required) has been filled out and performed by Fermilab personnel.

_____ _____
Crew Chief Date

4.0 Corrector Pre-alignment

4.1 Set up Corrector Magnets for Pre-alignment referencing.

Technician(s) Date

STOP

4.2 Perform Stretched Wire Measurement of Corrector Magnets.

Responsible Authority/Physicist Date

STOP

4.3 Verify Corrector Roll Angles.

Responsible Authority/Physicist Date

4.4 Set-up Pre-alignment plates for welding.

Technician(s) Date

4.5 Weld the Pre-alignment plates to the MCBXA, MQSX AND MCSOX Correctors. (See Serial Numbers from step 3.1)

Weldor(s) Date

STOP

4.6 Verify that the Pre-alignment plates are positioned / welded in their proper locations and document the data.

Responsible Authority/Physicist Date

5.0 Q3 Magnet Placement (Module Assembly Tooling)

5.1 Configure tooling for Q3 Cold Mass Assembly (ME-390528) per Final Cold Mass Assembly Stat – Support and Clamping Fixture (ME-369768).

Technician(s) _____ Date _____

5.2 Configure tooling for Corrector Mounting per Cold Mass / Cryostat Station Corrector Support Fixture (ME-369780), 13.780 Diameter Corrector Magnet.

Technician(s) _____ Date _____

5.3 Configure tooling for End Dome Mounting per Cold Mass Cryostat Station Final Assembly (ME-369765, View E-E).

Technician(s) _____ Date _____

5.4 Move the Q3 Cold Mass to the Cold Mass Module Assembly Tooling, placing it nearest the West End of ICB, with the Lead End of the Magnet facing west as per Q3 Cold Mass Welded Assembly (ME-390529).

Technician(s) _____ Date _____

6.0 Bus Assembly Installation

6.1 Measure the length of the Cold Mass and record below.

Cold Mass Length: 24 ft

Technician(s) _____ Date 11/3/05

6.2 Add four feet (48 inches) to the Cold Mass Length and record below. This will be the top piece.

Cold Mass Length from step 6.1: 24 ft

Add: **+ 48 in.**

Length of top piece: 28 ft

Technician(s) _____ Date 11/3/05

STOP

Crew Chief _____ Date 11-3-05

6.3 Cut a piece of Nomex (MB-430064) equal to the total length recorded in step 6.2. This will be referred to as the top piece.

Technician(s) _____ Date 11/3/05

6.4 Record the total length of the top piece, recorded in step 6.2, below. Multiply the total by 2 and record the number below. This will be the length of the bottom piece.

Length of top piece: 28 ft

Multiply by 2: **x 2**

Length of bottom piece: 56 ft

Technician(s) _____ Date 11/3/05

STOP

Crew Chief _____ Date 11-3-05

6.5 Cut a piece of Nomex (MB-430064) equal to the total length recorded in step 6.4. This will be referred to as the bottom piece.

Technician(s) Date 11/3/05

6.6 Pull the two pieces of Nomex (MB-430064) through the Bus Slot. Leave two feet of Nomex extending past the end of the Cold Mass at the Lead End and Non-Lead End. Fold top piece over top of Cold Mass and fold bottom piece under bottom of Cold Mass. (As shown n figure 6.6 below)

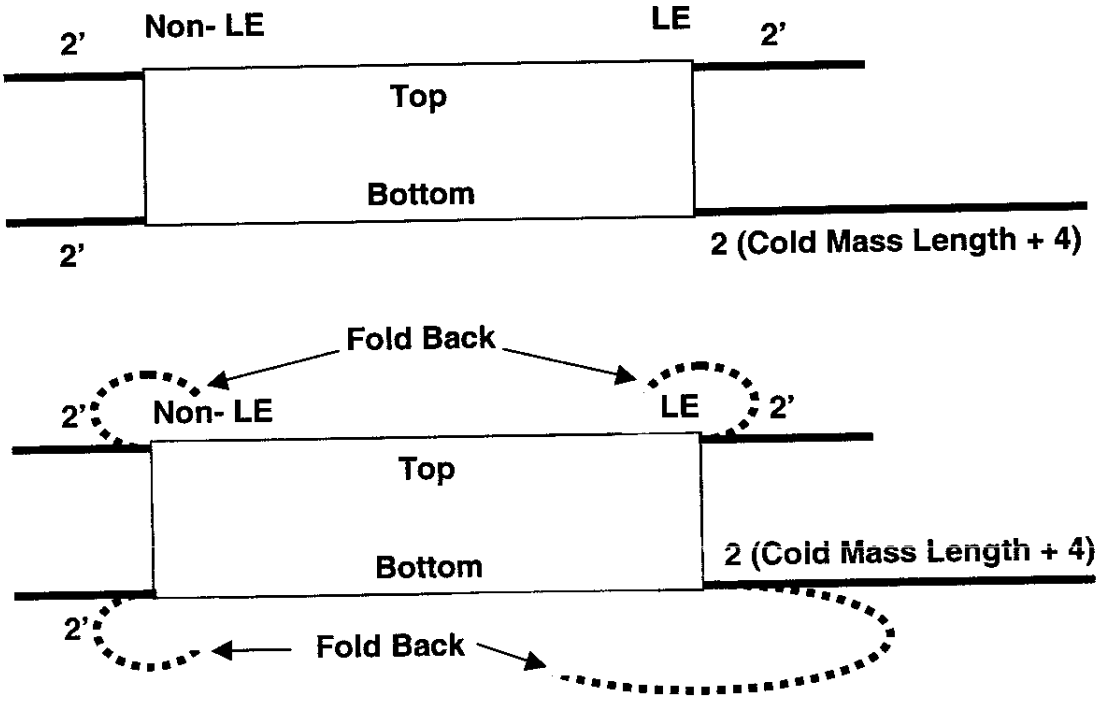

Figure 6.6

Technician(s) Date 11/3/05

6.7 Starting at the Lead End, slide the Lead and Corrector Coil Bus Assembly (MB-430065) into Magnet Bus Slot between the two pieces of Nomex (MB-430064). The bottom piece of Nomex will move with the bus. Pull the bottom piece as it is being fed into the Cold Mass.

Technician(s) Date 11/3/05

6.8 Cut Nomex (MB-430064) equal to the Length of the Cold Mass. (See Step 6.1 for reference)

Technician(s) Date 11/03/05

7.0 Q3 Cold Mass Alignment

7.1 Rotate the Q3 Cold Mass, with the Power Leads facing up, into the proper orientation as shown in Figure 7.1-A.

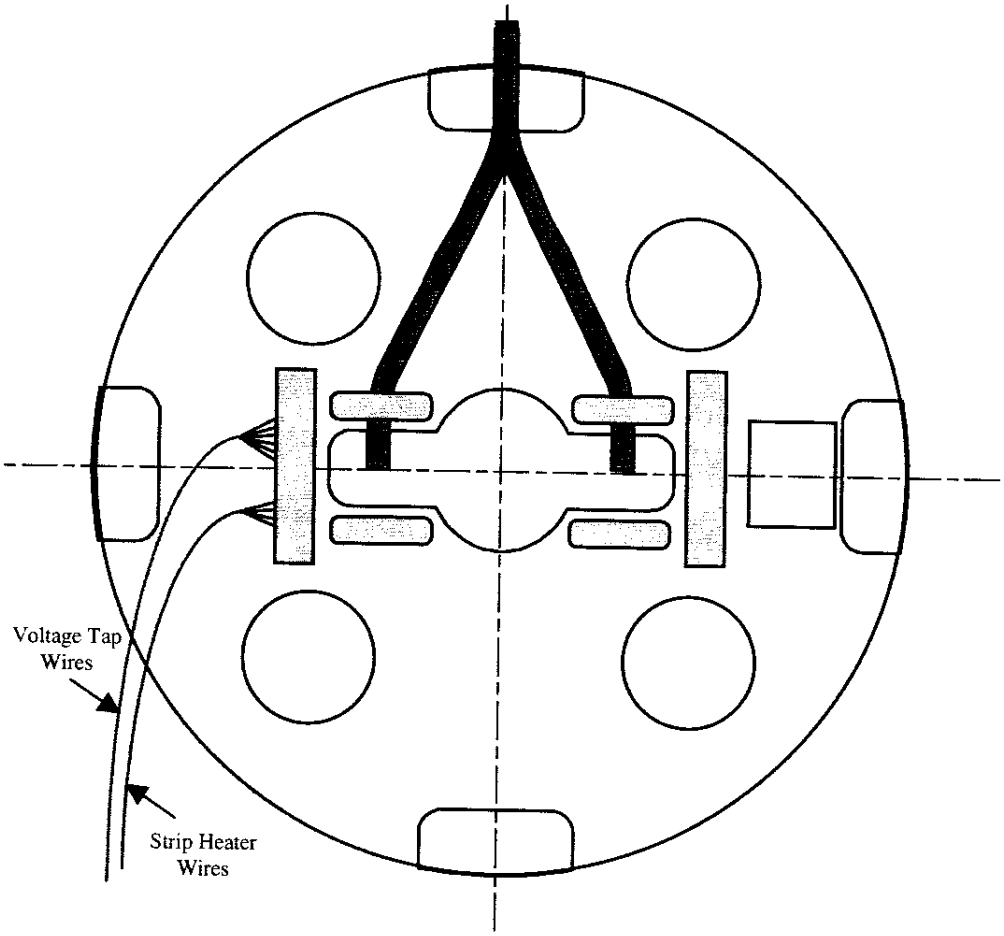

Looking at Lead End of Q3

Figure 7.1-A

Technician(s) _____ Date 11/3/05

7.2 Perform a stretched wire measurement of the system to align the Cold Mass within ± .2 mR.

Responsible Authority/Physicist _____ Date _____

8.0 Instrumentation Installation

8.1 Prepare Q3 Instrumentation Wire Feed thru (MB-430074). Build per Q3 Module Assembly Instrumentation Wire Feed thru (ME- 430074). Wire Labels and descriptions are shown in Figure 8.1 and per (MB-430074).

Note(s):

USE ONLY CERN LABELS ON WIRES.

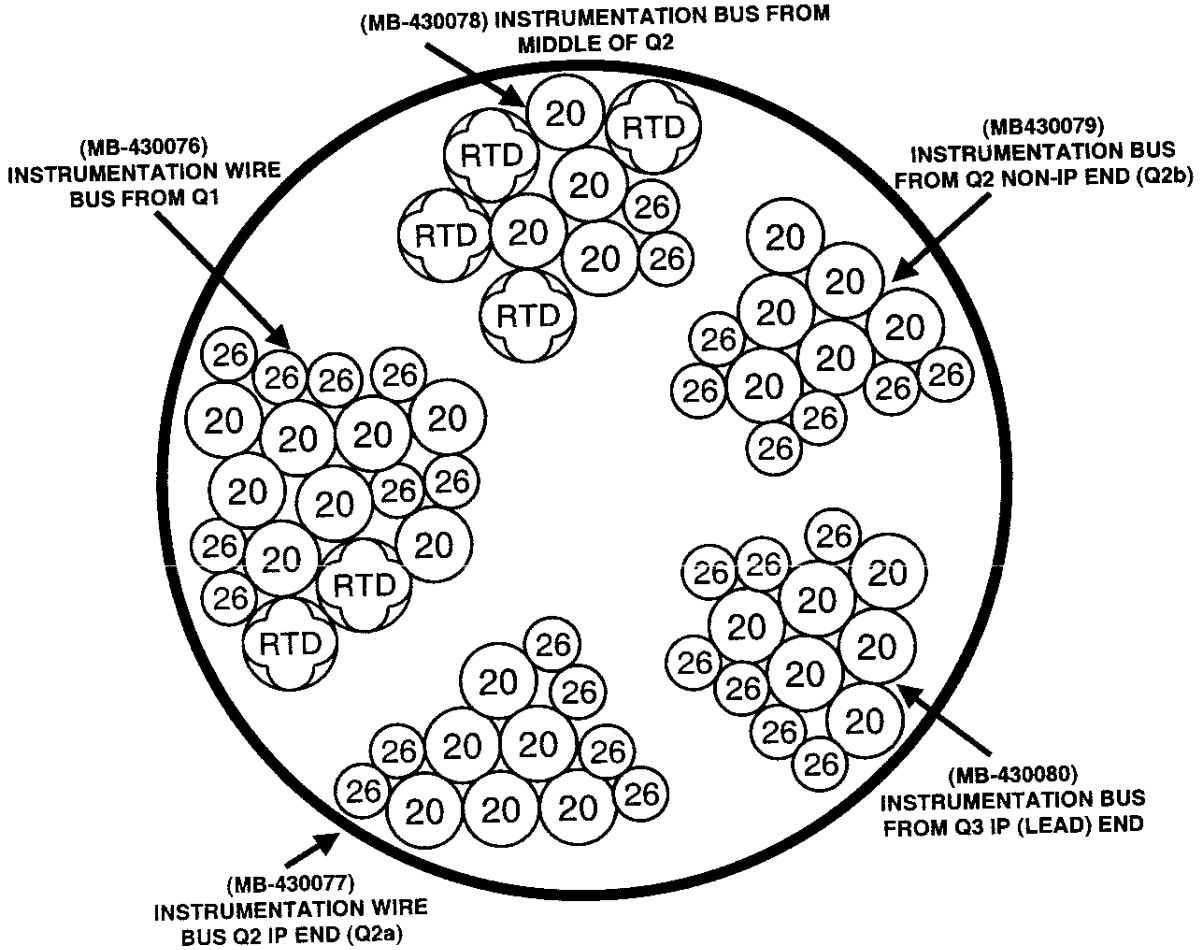

Figure 8.1
INSTRUMENTATION TUBE

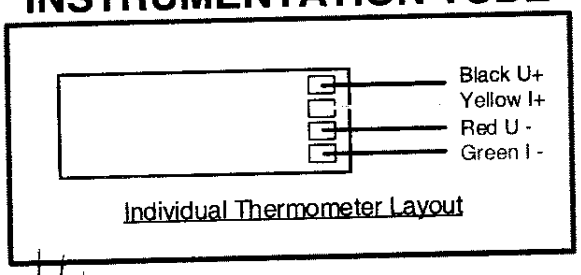

Technician(s) _____ Date _____

8.2 Slide Instrumentation Bus Assembly (MB-430074) into the proper Q3 Port as per Q3 Module Assembly (ME-369900). Verify that there is sufficient slack in cable to allow for two inches of differential thermal contraction.

N/A

Technician(s) _____ Date _____

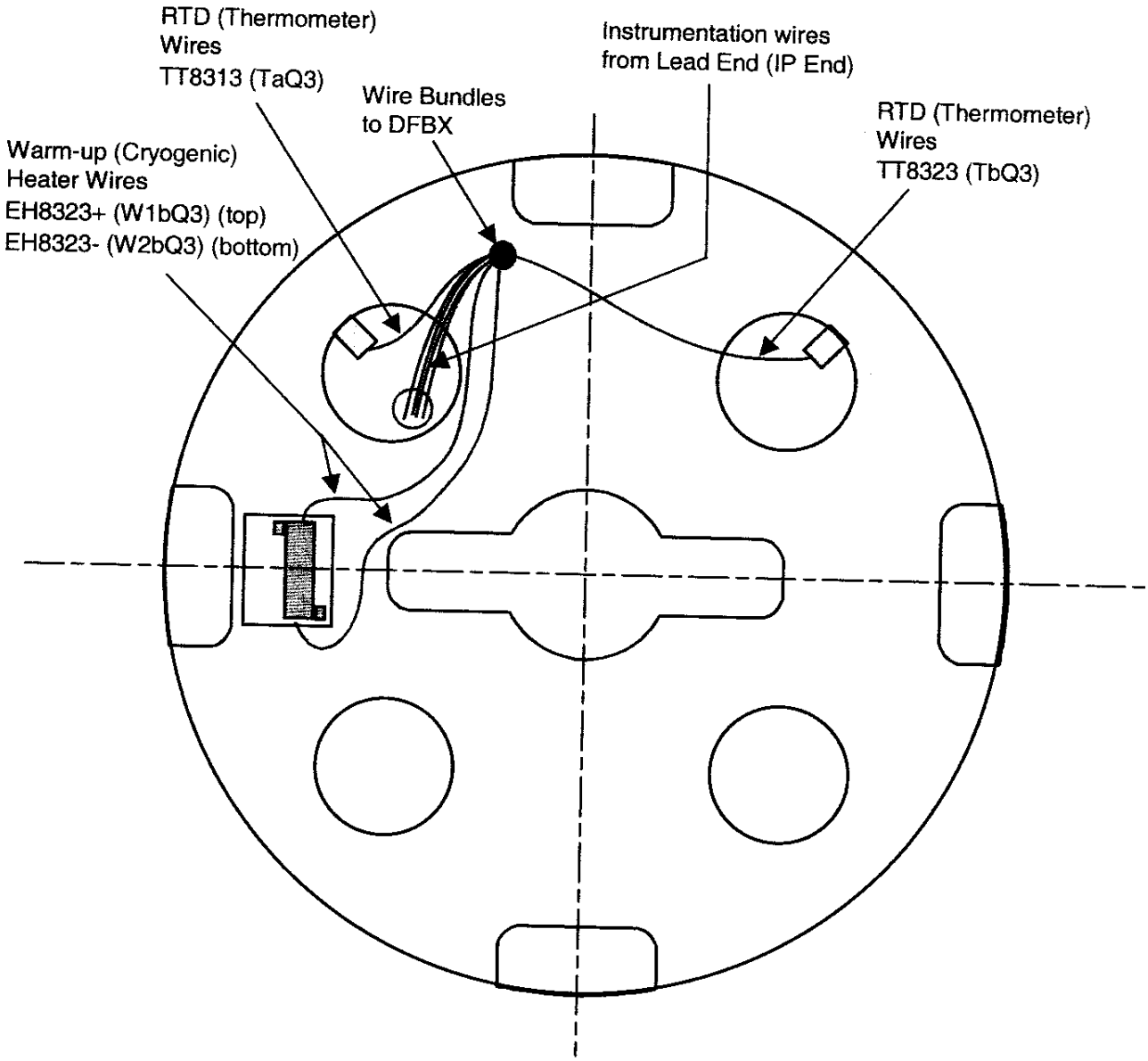

Looking at Non-Lead End (Non-IP End) of Q3

Figure 8.2-A

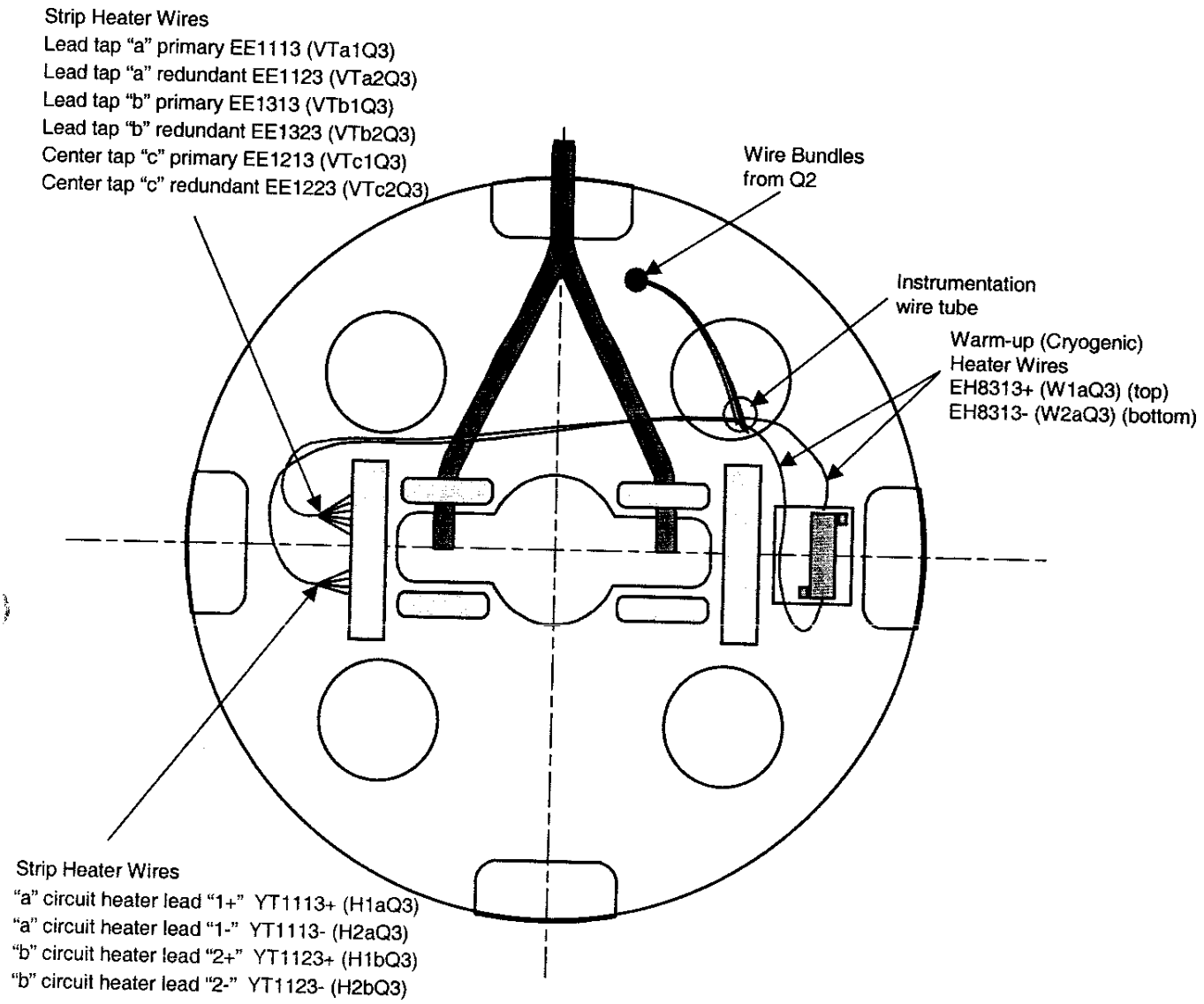

Looking at Lead End (IP end) of Q3

Figure 8.2-B

8.3 Weld Warm-up Heater Base Plates (MA-369997) and RTD Mount Blocks to End Plates as per Q3 Module Assembly (ME-369900).

N/A

Weldor(s) _____ Date _____

8.4 Install Warm-up Heaters (ME-369834) to each end of Q3 as per Q3 Module Assembly (ME-369900).

8.4.1 Install Warm-up Heaters (MA-369834) onto the Warm-up Heater Base Plate (MA-369997).

8.4.2 Solder wires (MA-369832) to the Warm-up Heaters as per (ME-369900).

N/A

Technician(s) _____ Date _____

8.5 Install RTD's as per Q3 Module Assembly (ME-369900). Record Serial Numbers of each RTD in the table below. Attach Data Sheet for each RTD to traveler.

8.5.1 Attach RTD's (MA-369835) (Qty. 4) to Mounting Blocks as per Q3 Module Assembly (ME-369900).

8.5.2 Solder wires (MA-369836) to RTD's as per Q3 Module Assembly (ME-369900). Individual RTD wiring is shown in Figure 8.5.2-A below.

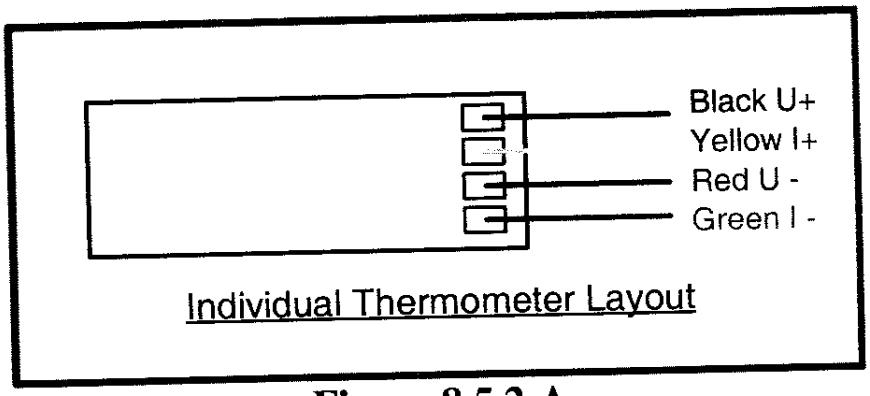

Figure 8.5.2-A

N/A

Technician(s) _____ Date _____

8.6 Perform a continuity check on all RTD's and Warm-Up Heaters. Record the Data below. (1mA). Record the resistance data from the Manufacturer's Traveler below. Compare RTD resistance test results to the resistance results from the Manufacturer's Traveler. Ensure RTD resistances are within **5Ω**. Attach the Manufacturer's RTD papers at the end of this traveler.

To measure the resistance of a Thermometer (RTD):

1. Use Hewlett Packard HP3457A digital multimeter.
2. Record temperature of building within +/- 5 degrees.
3. Press line button to turn line on.
4. Connect wires as shown in Figure below.
5. Push blue button (function key) once.
6. Push OHMF button.
7. Verify arrow in readout is above the 4WΩ (meaning a 4 wire resistance measurement).
8. Read resistance in ohms and record in traveler.

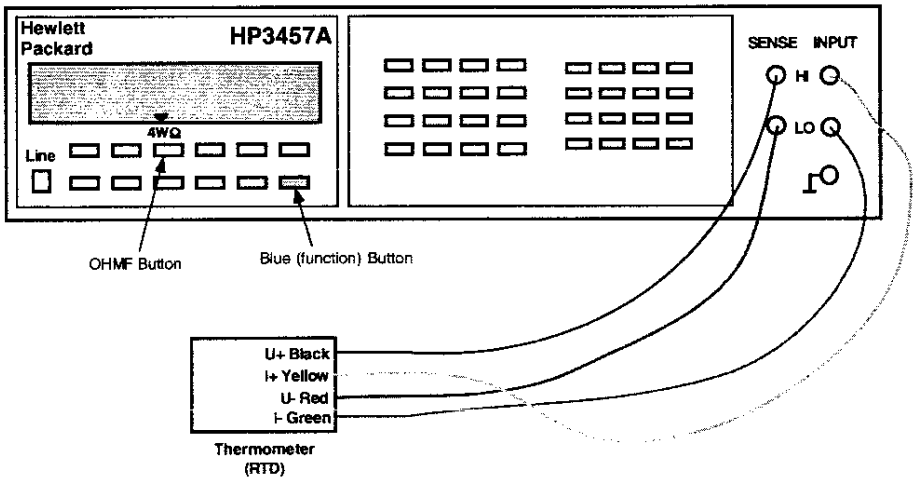

RTD'S				
Building Temperature: _____			**Time of Test:** _____	
Serial No.	**Location**	**Wire No.**	**Measured Ω**	**Mfr. Ω (expedition)**
	Q3 Inst. Bus Side	TT8313		
	Q3 Inst. Non-Bus Side	TT8323		

Cryogenic (Warm-up) Heaters		
Building Temperature: _____		**Time of Test:** _____
Location	**Wire No**	**Measured Ω**
Q3 Lead End (IP End)	**EH8313+**	Ω
	EH8313-	
Q3 Non-Lead End (Non-IP End)	**EH8323+**	Ω
	EH8323-	

_____ Technician(s)

_____ Date

8.7 Hipot RTD's to 100V. Use Droege Serial No. 910 (FNAL Part No. 51330) or equivalent. (Max. Leakage < 0.1 μA)

STOP

Have Crew Chief verify setup and sign below before continuing.

N/A

Crew Chief _____ Date _____

RTD'S		
Building Temperature: _____		**Time of Test:** _____
Serial No.	**Location**	**Hipot Leakage < 0.1 μA**
TT8313	Q3 Inst. Bus Side	
TT8323	Q3 Inst. Non-Bus Side	

Hipot Cryogenic (Warm-up) Heaters to 300V. Use Droege Serial No. 910 (FNAL Part No. 51330) or equivalent. (Max. Leakage < 0.1 μA)

STOP

Have Crew Chief verify setup and sign below before continuing.

N/A

Crew Chief _____ Date _____

Warm-up Heaters		
Building Temperature: _____		**Time of Test:** _____
Location	**Wire No**	**Hipot Leakage < 0.1 μA**
Q3 Lead End (IP End)	**EH8313+**	
	EH8313-	
Q3 Non-Lead End (Non-IP End)	**EH8323+**	
	EH8323-	

N/A

Technician(s) _____ Date _____

8.8 Fill out the Cryogenic Thermometer Traveller that came with the RTD.
Fill out:

- Corrector Tag Name
- Date
- Resistance Measurement
- Temperature (i.e. 77° F)
- Firm/Laboratory (Fermi)
- Checked By (Print Last Name)

Once all information has been filled out, make a copy of the Cryogenic Thermometer Traveller and place the copy in the designated binder.

N/A
Technician(s) _____ Date _____

STOP

N/A
Crew Chief _____ Date _____

8.9 Mount the MCBXA Corrector Mounting Ring (ME-390037) to the MCBXA Corrector Magnet.

N/A
Technician(s) _____ Date _____

8.10 Position and align the MCBXA Corrector Magnet using corrector Pre-alignment plates and data obtained in Step 4.0.

N/A
Technician(s) _____ Date _____

8.11 Verify alignment of MCBXA Corrector Magnet as per Q3 Module Assembly (ME-369900).

STOP

N/A
Crew Chief _____ Date _____

8.12 Tack weld the MCBXA Corrector Mounting Ring (ME-390037) to the Q3 Cold Mass Assembly (ME-390528) per Q3 Cold Mass Welded Assembly (ME-390529).

N/A
Weldor _____ Date _____

8.13 Weld the MCBXA Corrector Mounting Ring (ME-390037) to the Q3 Cold Mass Assembly (ME-390108) Non-Lead End per Q3 Cold Mass Welded Assembly (ME-390529).

N/A

Weldor _____ Date _____

8.14 Splice the Cold Mass voltage taps to the wire bundle.

N/A

Technician(s) _____ Date _____

8.15 Verify the splices electrically:

Test of Q3 Fixed Voltage Taps

Apply 1A current between BUS #1 & BUS #2 on the Feed End (See Figure 7.15-A)

1. Clamp Bus #1 to Bus #2 on Return End.
2. Connect Current Source: BUS #1 to Positive and BUS #2 to Negative.

Use a 3457 or equivalent Digital Voltmeter and record measurement to four decimal places.

Use the Two-Wires Voltage Measurement Technique:

1. Connect Digital Voltmeter LO wire to BUS#2 (or Negative output of Power source).
2. HI wire of Digital Voltmeter will move through wires to measure V.

DO NOT USE DC CURRENT LARGER THAN 2A.

DO NOT APPLY CURRENT THROUGH MAGNET LONGER THAN 30MIN.

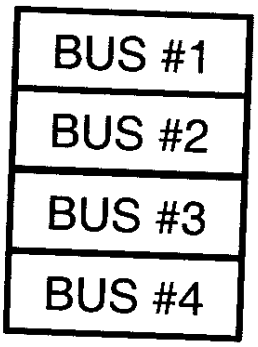

Power Bus Location Return End

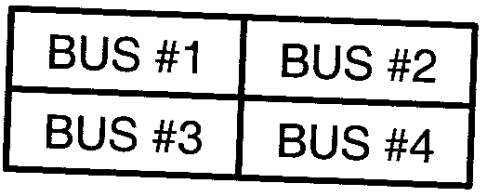

Power Bus Location Feed End

Figure 8.15-A

HYPERTRONICS CONNECTOR		FNAL Labels	Description	Wire Labels	Expected Voltage,V	Measured
Module	Pin					
NA	NA	VTa1Q3	Q3 Lead Voltage Tap "a", primary	EE1113	7.0000	
NA	NA	VTa2Q3	Q3 Lead Voltage Tap "a", redundant	EE1123	7.0000	
NA	NA	VTb1Q3	Q3 lead Voltage Tap "b", primary	EE1313	0.0030	
NA	NA	VTb2Q3	Q3 Lead Voltage Tap "b" redundant	EE1323	0.0030	
NA	NA	VTc1Q3	Q3 Center Voltage Tap "c", primary	EE1213	3.5000	
NA	NA	VTc2Q3	Q3 Center Voltage Tap "c", redundant	EE1223	3.5000	

Across BUS #1 and BUS #2:	

N/A
Technician(s)

Date

Protection Strip Heaters

Measure resistance across each heater using a handheld meter.

Module	Pin	Breakout BOX Labels	Expected Resistance, OHM	Measured Resistance, OHM	FNAL Label	Description
NA	NA	YT1113+	30		H1aQ3	Q3 Protection (Strip) Heater, ("a" circuit) (CERN lead #1+)
NA	NA	YT1113-			H2aQ3	Q3 Protection (Strip) Heater, ("a" circuit) (CERN lead #1-)
NA	NA	YT1123+	30		H1bQ3	Q3 Protection (Strip) Heater, ("b" circuit) (CERN lead #1+)
NA	NA	YT1123-			H2bQ3	Q3 Protection (Strip) Heater, ("b" circuit) (CERN lead #1-)

N/A
Technician(s)

Date

8.16 Attach wires using putty and install the Voltage Tap Splice Cover Block (MC-430146).

N/A

Technician(s) Date

8.17 Mount the MQSX Corrector Mounting Ring (MD-390209) to the MQSX Corrector Magnet.

N/A

Technician(s) Date

8.18 Position and align the MQSX Corrector Magnet (ME-390529) using corrector Pre-alignment plates and data obtained in Step 4.0 per Q3 Cold Mass Welded Assembly.

N/A

Technician(s) Date

8.19 Verify alignment of MQSX Corrector Magnet as per Q3 Module Assembly (ME-369900).

N/A

Crew Chief Date

8.20 Tack weld the MQSX Corrector Mounting Ring (MD-309209) to the Q3 Cold Mass Assembly (ME-390528) per Q3 Cold Mass Welded Assembly (ME-390529).

N/A

Weldor Date

8.21 Weld the MQSX Corrector Mounting Ring (MD-309209) to the Q3 Cold Mass Assembly (ME-390528) Lead End per Q3 Cold Mass Welded Assembly (ME-390529).

N/A

Weldor Date

9.0 Installation of MQSX Corrector Coil

9.1 At the IP End, set up the Power Leads for splicing as shown in the Q3 Module Assembly Drawing (ME-369900).

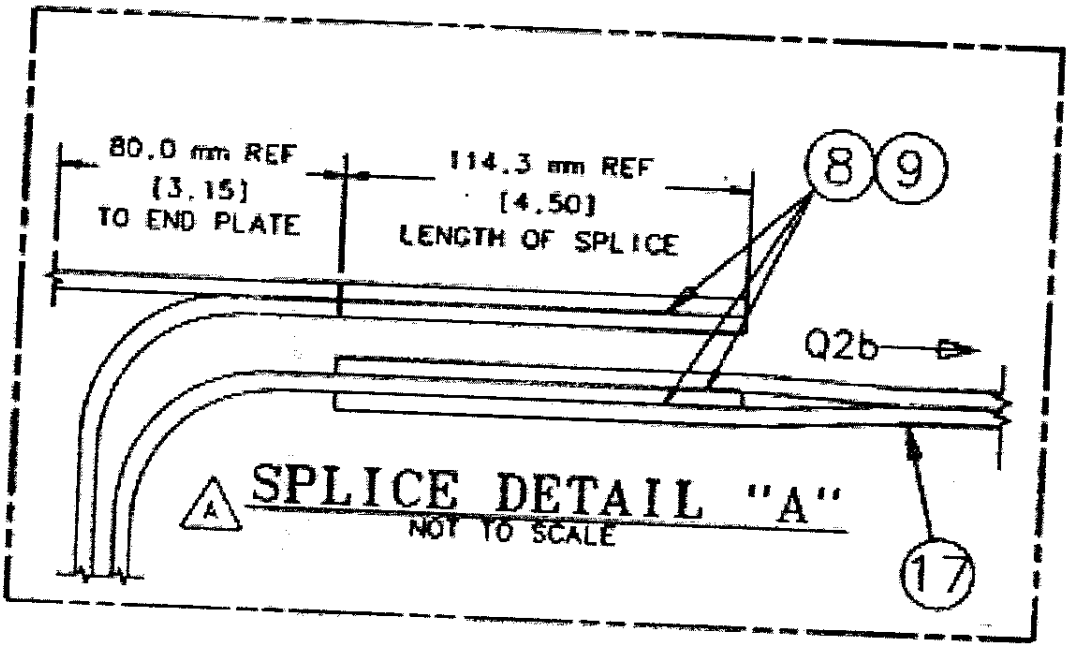

Figure 9.1-A
(ME-369900, Sheet 3 of 5)

Technician(s) _____ Date _____

9.2 Construct / Obtain Expansion Loop Tail per Q3 Module Assembly Insulated Expansion Loop Tail (MB-430145).

Technician(s) _____ Date _____

9.3 Solder the Lower Lead to the expansion Loop Tail from Step 9.2 as per Q3 Module Assembly Drawing (ME-369900).

Technician(s) _____ Date _____

9.4 Solder the Upper Magnet Lead (Terminal "A", Quadrant 4) to the Lower 8kA Bus as per Q3 Module Assembly Drawing (ME-369900).

Technician(s) _____ Date 11/03/05

9.5 Insulate each splice with 2/3 overlap, .002 x 3/8 wide Kapton, (MA-292722).

Technician(s) _____ Date 11/03/05

9.6 Insert a piece of .005 Kapton between splices.

Technician(s) _____ Date 11/03/05

9.7 Put splices together and insulate splice area with ¾ overlap, .002 x 3/8 wide Kapton (MA-292722).

Technician(s) _____ Date 11/03/05

9.8 Attach Q3 Bus Splice Clamp Assembly (MD-430031) to Q3 Lead as per Q3 Module Assembly (ME-369900).

Technician(s) _____ Date 11/03/05

9.9 Attach IP (Lead) End Buss Crossover Block Assembly (MD-430095) as per Q3 Module Assembly (ME-369900).

Technician(s) _____ Date 11/03/05

9.10 Attach Cable Clamp Assemblies as per Q3 Module Assembly (ME-369900).

Technician(s) _____ Date 11/03/05

9.11 Solder MQSX Corrector Wires per Q3 Module Assembly (ME-369900) and as shown in Figure 9.12-A.

Technician(s) _____ Date 11/03/05

9.12 Install voltage taps on MQSX corrector leads. One tap is to be soldered to the "A" Lead of each corrector element. Wire label is shown below in Figure 9.12-A.

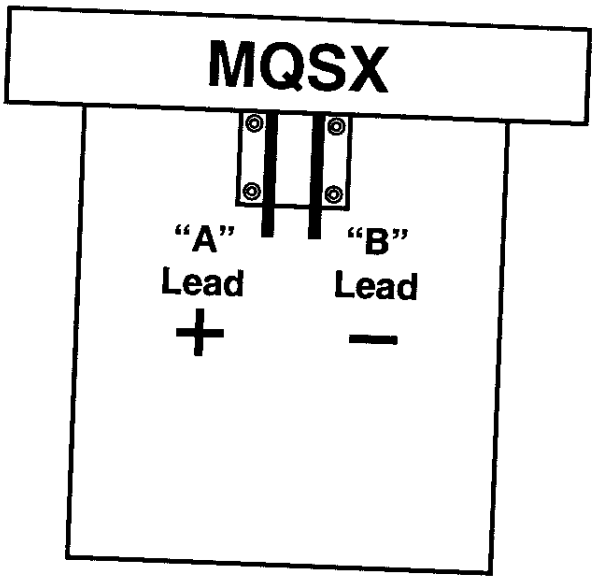

Overhead View

Figure 9.12-A

Corrector Assembly	Corrector Element	Label
MQSX	MQSX	A+ lead Q3A2 (skew quadrupole) voltage tap EE8223 (VTA2)

Technician(s) _____ Date 11-3-05

10.0 Final MCBXA Corrector Preparations

10.1 Route MCBXA Corrector Coil Wires as shown in Figure 10.1-A below and per Q3 Cold Mass Welded Assembly (ME-390529).

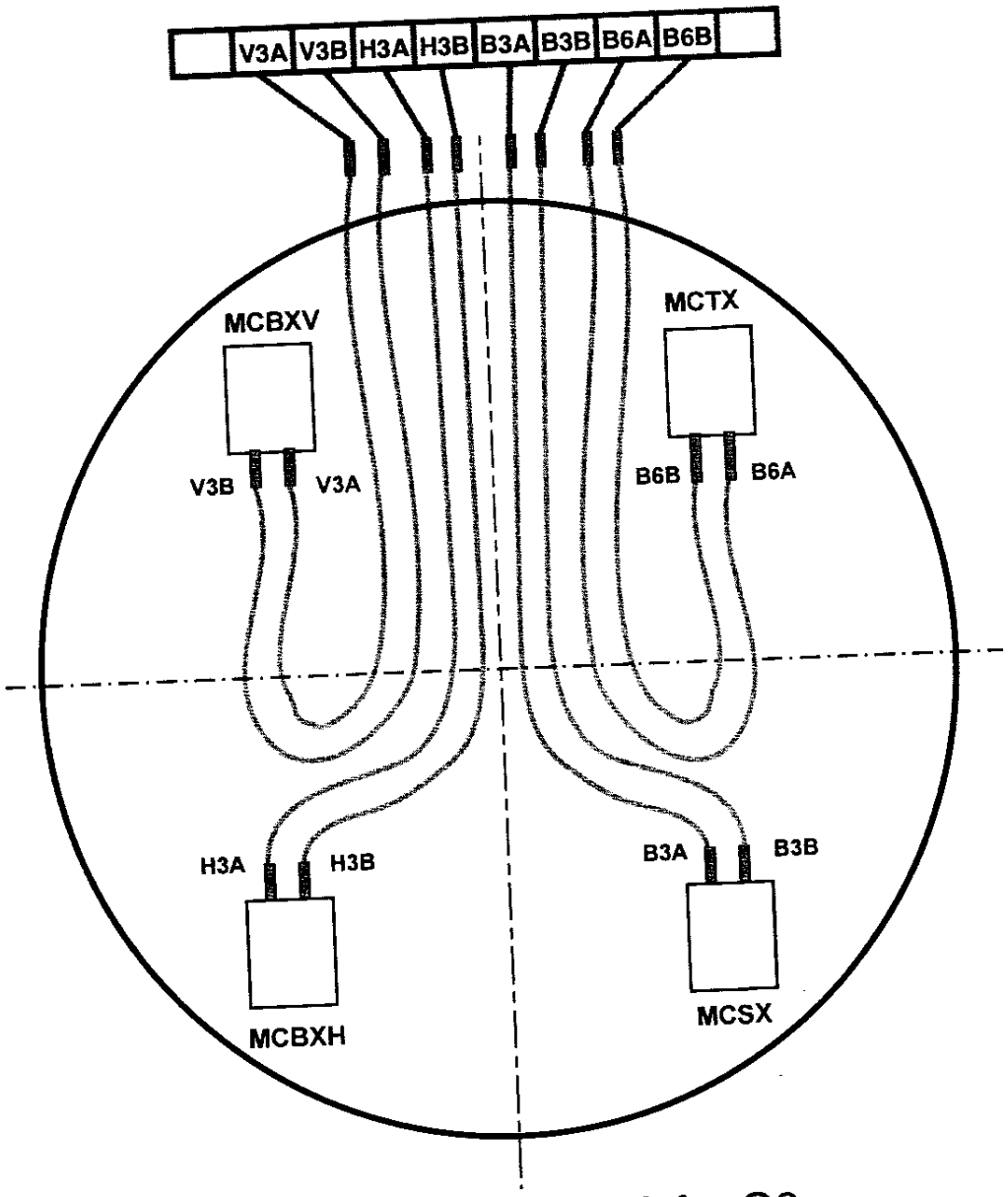

End View of MCBXA for Q3
(in "up" position)

Looking into end of correction coil from DFBX to Q3

Figure 10.1-A

N A

Technician(s)

Date

10.2 Solder Corrector Wires per Q3 Module Assembly (ME-369900) and as shown in Figure 10.2-A.

N/A

Technician(s) _____ Date _____

10.3 Install voltage taps on MCBXA corrector leads. One tap is to be soldered to the "A" Lead of each corrector element. Wire labels are shown below.

Corrector Assembly	Corrector Element	Label
MCBXA	MCBXH	A+ lead Q3H3 (skew dipole) voltage tap EE8123 (VTH3)
	MCBXV	A+ lead Q3V3 (normal dipole) voltage tap EE8113 (VTV3)
	MCSX	A+ lead Q3B3 (normal sextupole) voltage tap EE8313 (VTB3)
	MCTX	A+ lead Q3B6 (normal dodecapole) voltage tap EE8613 (VTB6)

N/A

Technician(s) _____ Date _____

11.0 Final MCSOX Corrector Preparations

11.1 Mount the MCSOX Corrector Magnet to the MCSOX Corrector Mounting Ring (ME-390664).

N/A
Technician(s) Date

11.2 Slide the MCSOX Corrector Magnet & MCSOX Corrector Mounting Ring (ME-390664) up to the MCBXA Corrector Magnet.

N/A
Technician(s) Date

11.3 Position the MCSOX Corrector Magnet using corrector Pre-alignment plates and data obtained in Step 4.0

N/A
Technician(s) Date

11.4 Verify alignment of MCSOX Corrector Magnet as per Q3 Module Assembly (ME-369900).

N/A
Crew Chief Date

11.5 Position the MCSOX Corrector Magnet longitudinally. (The gap between the MCBXA Magnet and the Mounting Ring should be approximately 15mm.)

N/A
Technician(s) Date

11.6 Tack weld MCSOX Corrector Mounting Ring (ME-390664) as per Q3 Cold Mass Welded Assembly (ME-390529).

N/A
Weldor(s) Date

11.7 Weld the MCSOX Corrector Mounting Ring (ME-390664) as per Q3 Cold Mass Welded Assembly (ME-390529).

N/A
Weldor(s) Date

12.0 Corrector Magnet Pre-Weld Alignment Procedures

12.1 Torque the MCBXA Corrector Magnet bolts to 500 in-lbs. per Note 4 of Q3 Cold Mass Welded Assembly (ME-390529). Shim between the Corrector and Flange as necessary.

N/A

Technician(s) _____ Date _____

12.2 Torque the MCSOX Corrector Magnet bolts to 500 in-lbs. per Note 4 of Q3 Cold Mass Welded Assembly (ME-390529). Shim between the Corrector and Flange as necessary.

N/A

Technician(s) _____ Date _____

12.3 Torque the MQSX Corrector Magnet bolts to 500 in-lbs. per Note 4 of Q3 Cold Mass Welded Assembly (ME-390529). Shim between the Corrector and Flange as necessary.

N/A

Technician(s) _____ Date _____

12.4 Verify all Correctors (MCBXA, MCSOX and MQSX) are aligned and ready for welding procedures.

- ☐ **MCBXA is ready for welding**
- ☐ **MCSOX is ready for welding**
- ☐ **MQSX is ready for welding**

STOP

N/A

Responsible Authority/Physicist _____ Date _____

12.5 Tack weld bolts and washers for mounting the MCBXA Corrector into place per Q3 Cold Mass Welded Assembly (ME-390529).

N/A

Weldor(s) _____ Date _____

12.6 Tack weld bolts and washers for mounting the MCSOX Corrector into place per Q3 Cold Mass Welded Assembly (ME-390529).

N/A

Weldor(s) _____ Date _____

12.7 Tack weld bolts and washers for mounting the MQSX Corrector into place per Q3 Cold Mass Welded Assembly (ME-390529).

N/A

Weldor(s) _____ Date _____

13.0 Wire the MCSOX Corrector Magnet

13.1 Attach the MCSOX Splice Plate Mounting Ring (ME-430129), the MCSOX Corrector Splice Face Plate (ME-430130), and the MCSOX Splice Plate Mounting Bars (ME-430128) as per Q3 Module Assembly (ME-369900).

N/A

Technician(s) _____ Date _____

13.2 Route wires as shown in figure below and per Q3 Module Assembly (ME-369900).

N/A

Technician(s) _____ Date _____

13.3 Solder Wires per Q3 Module Assembly (ME-369900) and Figure 13.0-A. (Next Page)

N/A

Technician(s) _____ Date _____

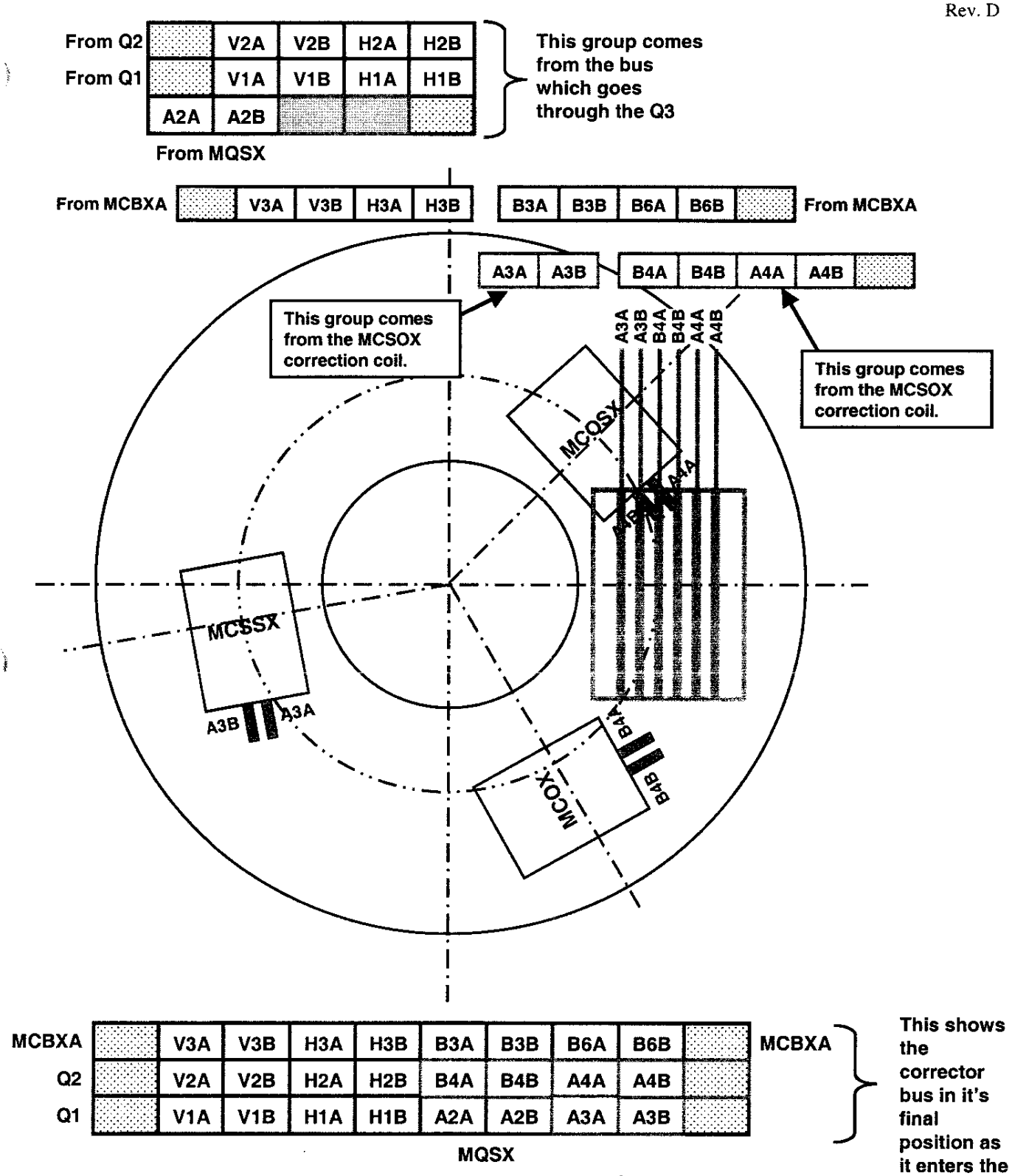

Looking into Non-IP End of Q3

Looking into end of correction coil from DFBX into Q3

Figure 13.0-A

13.4 Install voltage taps on MCSOX corrector leads. One tap is to be soldered to the "A" Lead of each corrector element. Wire labels are shown below.

Corrector Assembly	Corrector Element	Label
MCSOX	MCOSX	A+ lead Q3A4 (skew octupole) voltage tap EE8423 (VTA4)
	MCOX	A+ lead Q3B4 (normal octupole) voltage tap EE8413 (VTB4)
	MCSSX	A+ lead Q3A3 (skew sextupole) voltage tap EE8323 (VTA3)

N/A
Technician(s)

Date

14.0 Dome Setup

14.1 Attach IP End Dome (MD-390221) (Q3) to the End Dome Positioning Fixture (MD-369776).

Technician(s) _____ Date _____

14.2 Align IP End Dome (MD-390221) as shown in Q3 Cold Mass Welded Assembly (ME-390529).

Technician(s) _____ Date _____

14.3 Level the IP End Dome (MD-390221) using the Ball Socket (MD-369777) and the Mini Level.

Technician(s) _____ Date _____

14.4 Mark the IP End Dome (MD-390221) and the End Plate with a Horizontal Witness Line. This Step will be used in Step 13.3 to reposition the Domes prior to Welding.

Technician(s) _____ Date _____

14.5 Remove the IP End Dome (MD-390221) from the Tooling.

Technician(s) _____ Date _____

14.6 While feeding the electrical wires/bus through the proper ports, attach Non-IP End Dome (MD-390668) (Q3) to the End Dome Positioning Fixture (MD-369776).

Technician(s) _____ Date _____

14.7 Align Non-IP End Dome (MD-390668) as shown in Q3 Cold Mass Welded Assembly (ME-390529).

Technician(s) _____ Date _____

14.8 Level the Non-IP End Dome (MD-390668) using the Ball Socket (MD-369777) and the Mini Level.

Technician(s) _____ Date _____

14.9 Mark the Non-IP End Dome (MD-390668) and the End Plate with a Horizontal Witness Line. This Step will be used in Step 20.1 to reposition the Extension Tubes prior to Welding.

Technician(s) _____ Date _____

14.10 Remove the Non-IP End Dome (MD- 390668) from the Tooling.

Technician(s) _____ Date _____

14.11 Perform preliminary reference measurements before moving the Cold Mass to an Assembly Table.

Check one (Upper / Lower slash) and then record the reference measurement and Mini-level No.

Upper Slash ☐

Lower Slash ☐

Take measurement while looking from Non-Lead End toward the Lead End.

Reference Measurement: _____

Mini-level No. _____

Technician(s) _____ Date _____

Responsible Authority/Physicist _____ Date _____

14.12 Move the Cold Mass to an Assembly Table.

Technician(s) _____ Date _____

15.0 Splicing the Power Leads

15.1 Route Cable and Corrector Leads on IP (Lead) End as shown below and per Q3 Module Assembly (ME-369900).

Lead Bus Orientation through Q3

R. Bossert 3-29-04

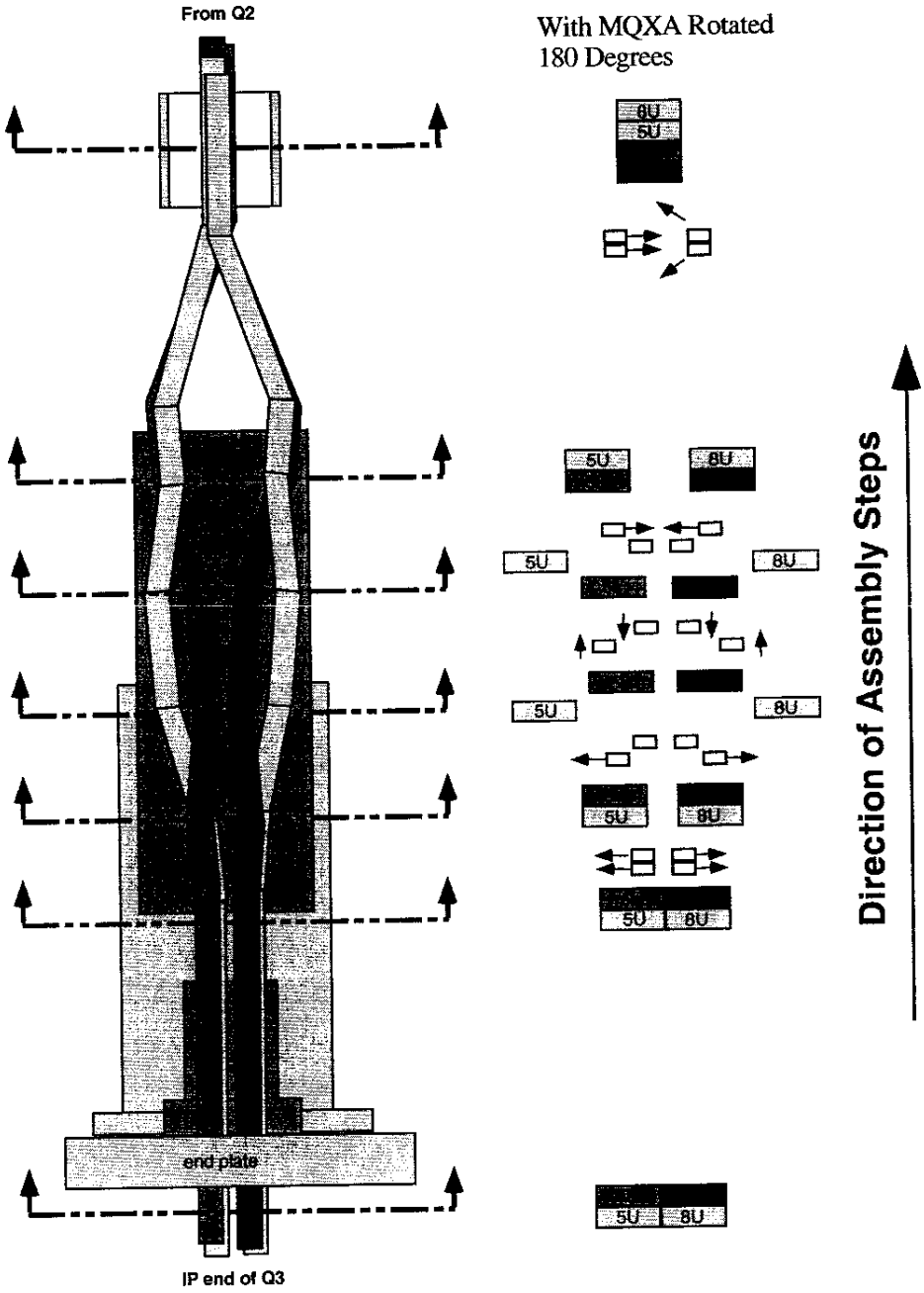

Figure 15.1-A

Technician(s) _____ Date 11-3-05

15.2 At the IP End, attach Spider Assembly (MD-430072) as per Q3 Module Assembly (ME-369900).

Technician(s) _____ Date _____

15.3 Attach Non-IP End Bus Crossover Block Assembly (MD-430081) as per Q3 Module Assembly (ME-369900).

Technician(s) _____ Date _____

15.2 At the IP End, attach Spider Assembly (MD-430072) as per Q3 Module Assembly (ME-369900).

Technician(s) _____ Date 11-7-05

15.3 Attach Non-IP End Bus Crossover Block Assembly (MD-430081) as per Q3 Module Assembly (ME-369900).

Technician(s) _____ Date 11-7-05

16.0 Mount MCSOX Bus and Expansion Loop Hardware

16.1 Mount the Side Cable Clamp Assembly (ME-430103) as per Q3 Module Assembly (ME-369900).

Technician(s) _____ Date 11 7-05

16.2 Mount the Non-IP (Non-Lead End) Corrector Bus Bundle Bracket (ME-430134) as per Q3 Module Assembly (ME-369900).

Technician(s) _____ Date 1-7-05

17.0 Assemble Bus and Expansion Loop on Non-IP (Non-Lead) End

17.1 Route Non-IP End cables into crossover assembly on Non-IP End as shown in figure 17.1-A.

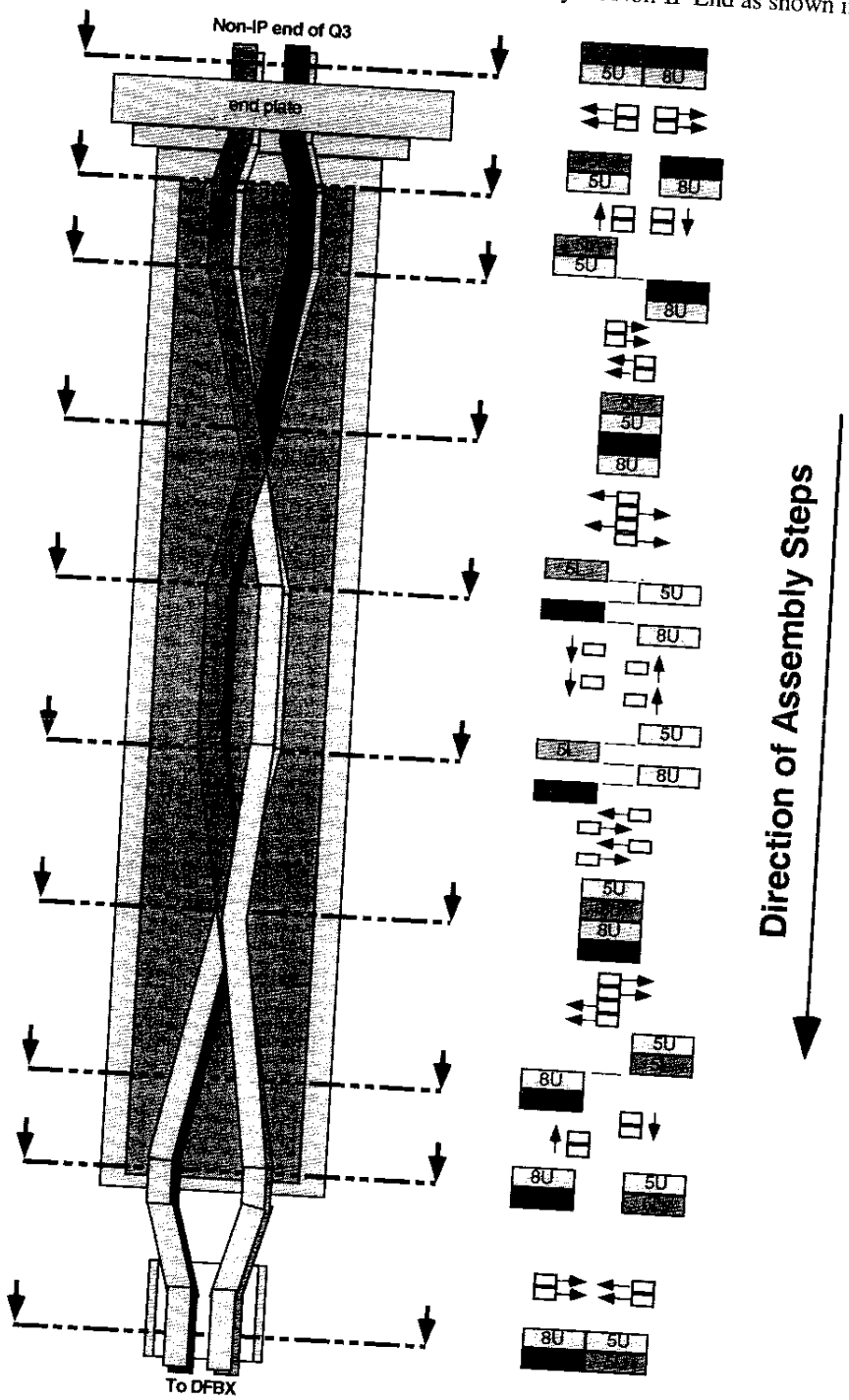

Figure 17.1-A

Technician(s)

11-7-05
Date

17.2 Configure Bus Expansion Loop as per Q3 Module Assembly (ME-369900).

Technician(s) _____ Date 11-7-05

17.3 At the Non-IP End, attach Spider Assembly (MB-430096) as per Q3 Module Assembly (ME-369900).

Technician(s) _____ Date 11-7-05

18.0 Electrical Inspection

18.1 Perform an electrical inspection on each of the Individual Quadrants and the Cold Mass. Refer to the Valhalla and Leader Free Standing Coil Measurement Procedure (ES-292306).

To measure the Resistance of a Q3 Cold Mass:

1. Use Valhalla Scientific 4300B digital micro-ohmmeter.
2. Set Test Current to 0.1 amp.
3. Set Scale to 2V full scale.
4. Turn temperature compensation on.
5. Turn test current off.
6. Connect I_{HI} to "A" Lead as shown in figure 18.1-A.
7. Connect I_{LO} to "B" Lead as shown in figure 18.1-A.
8. Turn test current on.
9. Connect V_{HI} and V_{LO} to voltage taps as shown in resistance table.
10. To measure Total with leads, connect V_{HI} to "A" Lead and V_{LO} to "B" Lead.
11. At the IP End, jumper the 8Ka leads as shown in Figure 18.1-A.
12. Read resistance and record in traveler.

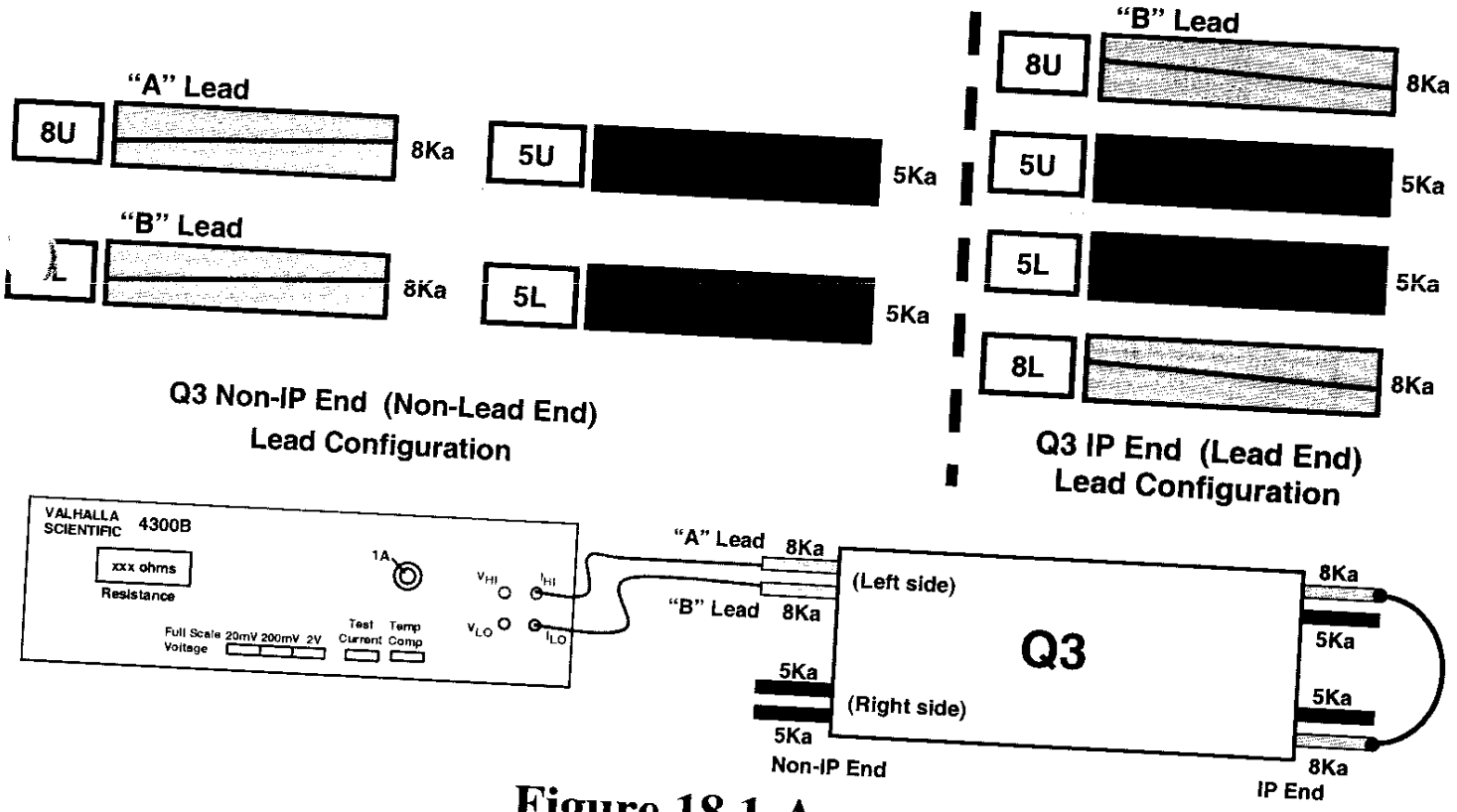

Figure 18.1-A

(Q3) Resistance				Nominal 3.35 to 3.45 Ω Total Resistance
Connect	Fermi	CERN	KEK	
V_{HI}	VTa1Q3	EE1113	a1	3.415 Ω
V_{LO}	VTc1Q3	EE1213	c1	
V_{HI}	VTc1Q3	EE1213	c1	IR 3.428 Ω
V_{LO}	VTb1Q3	EE1313	b1	

				Total Resistance with Leads Nominal 6.75 to 6.85 Ω
V_{HI}	Q4 Power Lead			6.872 Ω
V_{LO}	Q3 Power Lead			
V_{HI}	VTa1Q3	EE1113	a1	6.842 Ω
V_{LO}	VTb1Q3	EE1313	b1	

Technician(s) [signature] Date 11/10/05

Check resistance of Redundant Voltage Taps.

Q3 Redundant Voltage Taps				Nominal 3.35 to 3.45 Ω Resistance
Connect	Fermi	CERN	KEK	
V_{HI}	VTa2Q3	EE1123	a2	3.415 Ω
V_{LO}	VTc2Q3	EE1223	c2	
V_{HI}	VTc2Q3	EE1223	c2	3.428 Ω
V_{LO}	VTb2Q3	EE1323	b2	

Technician(s) [signature] Date 11/10/05

To measure Ls and Q of a Q3 Cold Mass:

1. Use Agilent 4263B LCR Meter.
2. Turn power on by pushing line button. Wait 30 seconds until display screen is lit.
3. Recall program #1. To do this, push recall (Rcl), then push #1, then push Enter.
4. Push Auto/Hold button to release hold.
5. Verify that the frequency displayed in the upper right corner of the display screen is 1000 Hz and the level recorded in the lower right corner of the display screen is 1V or 1000 mV.
6. Connect H_{cur} to "A" power lead as shown in figure 18.1-B.
7. Connect L_{cur} to "B" power lead as shown in figure 18.1-B.
8. Connect H_{pot} and L_{pot} buttons to voltage taps as shown below.
9. Read Ls and Q from display and record in table.

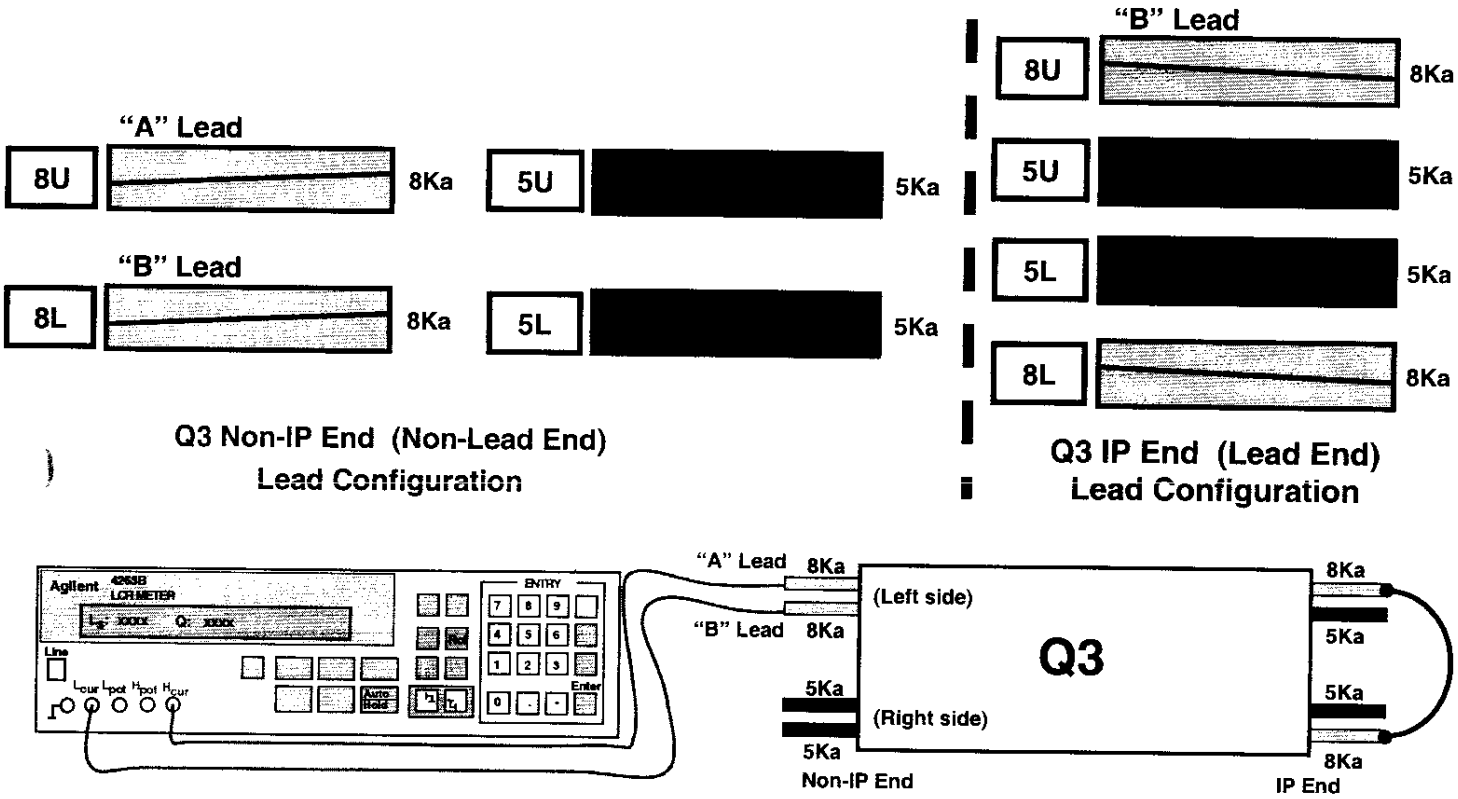

Figure 18.1-B

(Q3) Inductance				Nominal 15 to 16 mH
				Total Inductance
Connect	Fermi	CERN	KEK	
H_{POT}	VTa1Q3	EE1113	a1	15.70 mH
L_{POT}	VTc1Q3	EE1213	c1	
H_{POT}	VTc1Q3	EE1213	c1	IR -1 14.4 15.70 mH
L_{POT}	VTb1Q3	EE1313	b1	

				Nominal 30 to 32 mH
				Total Inductance
H_{POT}	VTa1Q3	EE1113	a1	27.54 mH
L_{POT}	VTb1Q3	EE1313	b1	
H_{POT}	Q4 Power Lead			31.28 mH
L_{POT}	Q3 Power Lead			

(Q3) Q-Factor				Nominal 1.0 to 1.2
				Total Q
Connect	Fermi	CERN	KEK	
H_{POT}	VTa1Q3	EE1113	a1	1.2
L_{POT}	VTc1Q3	EE1213	c1	
H_{POT}	VTc1Q3	EE1213	c1	1.2
L_{POT}	VTb1Q3	EE1313	b1	

				Nominal 1.0 to 1.2
				Total Inductance
H_{POT}	VTa1Q3	EE1113	a1	1.2
L_{POT}	VTb1Q3	EE1313	b1	
H_{POT}	Q4 Power Lead			1.2
L_{POT}	Q3 Power Lead			

Technician(s) _____ Date 11/10/05

To measure the resistance of a Thermometer (RTD):

1. Use Hewlett Packard HP3457A digital multimeter.
2. Record temperature of building within +/- 5 degrees.
3. Press line button to turn line on.
4. Connect wires as shown in Figure below.
   U+ (Black) to Sense HI
   I+ (Yellow) to Input HI
   U- (Red) to Sense LO
   I- (Green) to Input LO
5. Push blue button (function key) once.
6. Push OHMF button.
7. Verify arrow in readout is above the 4WΩ (meaning a 4 wire resistance measurement).
8. Read resistance in ohms and record in traveler.

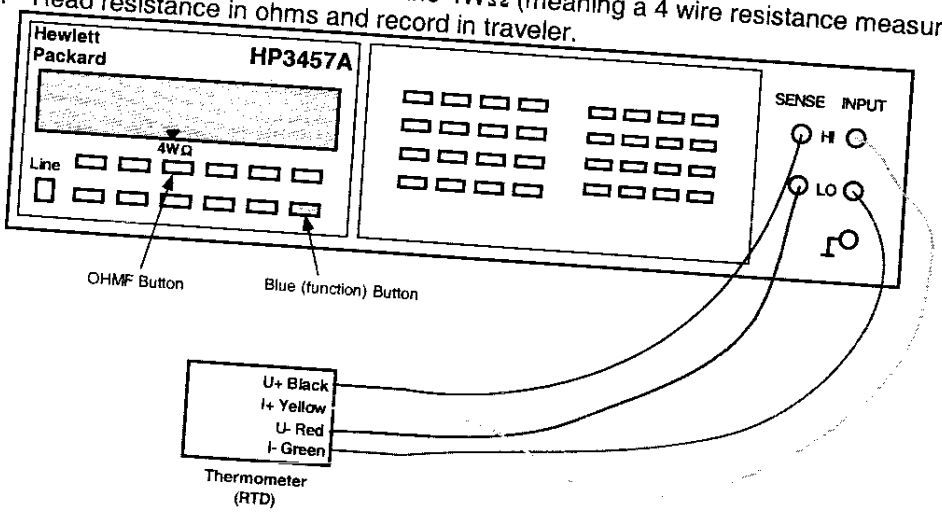

To measure the resistance of a Cryogenic (Warm-up) Heater

1. Use Hewlett Packard HP3457A digital multimeter.
2. Record temperature of building within +/- 5 degrees.
3. Press line button to turn line on.
4. Connect wires as shown in Figure below.
5. Push blue button (function key) once.
6. Push OHMF button.
7. Verify arrow in readout is above the 4WΩ (meaning a 4 wire resistance measurement).
   Note: Although this is technically a 4 wire measurement, it is effectively a 2 wire measurement, since there are only 2 wires connected to each heater.
8. Read resistance in ohms and record in traveler.

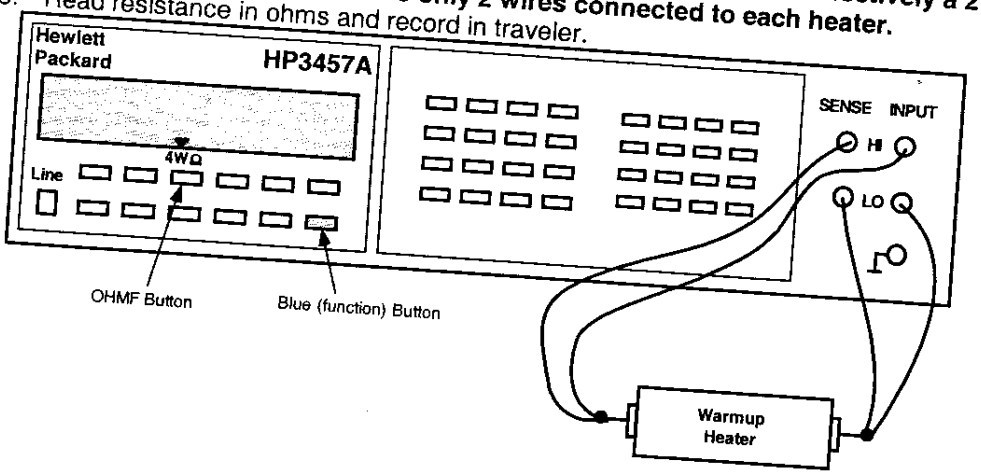

Q3 - RTD's and Cryogenic (warm-up) Heaters				
Temperature of Building (± 5°): 41° F				
Component	Fermi	CERN	Range	Resistance
Q3 RTD, primary	TaQ3	TT8313	60 to 70 Ω	71.654 Ω
Q3 RTD, redundant	TbQ3	TT8323	60 to 70 Ω	64.979 Ω
Q3 Cryogenic (warm-up) Heater (LE) - wire at top (CERN #1 I+)	W1aQ3	EH8313+	16 to 18.5 Ω	16.523 Ω
Q3 Cryogenic (warm-up) Heater (LE) - wire at bottom (CERN #1 I-)	W2aQ3	EH8313-		
Q3 Cryogenic (warm-up) Heater (Non-LE) wire at top (CERN #2 I+)	W1bQ3	EH8323+	16 to 18.5 Ω	16.187 Ω
Q3 Cryogenic (warm-up) Heater (Non-LE) wire at bottom (CERN #2 I-)	W2bQ3	EH8323-		

C. Fuiay / Inez Ramos — Technician(s)

11/10/05 — Date

Using the Hewlett Packard HP3457A digital multimeter, measure the Protection (Strip) Heater Resistance for Q3.

Q3 Protection (Strip) Heater Resistance					
Fermi	CERN	KEK	Description	Limit	Resistance
H1aQ3	YT1113+	HA1	Circuit A	28 to 32 Ω	28.699 Ω
H2aQ3	YT1113-	HA2			
H1bQ3	YT1123+	HB1	Circuit B	28 to 32 Ω	28.640 Ω
H2bQ3	YT1123-	HB2			

C. Fuiay / Inez Ramos — Technician(s)

11/10/05 — Date

LHC Serial No.: LMQXC07-0
Notes:

18.2 Using the Valhalla 4300B, connect 10mA applied voltage thru the corrector Power Leads. Measure Resistance and record in the table below. Record Initial resistance of Corrector Element and record below.

Corrector Bus Leads

	V3A	V3B	H3A	H3B	B3A	B3B	B6A	B6B	
	V2A	V2B	H2A	H2B	B4A	B4B	A4A	A4B	
	V1A	V1B	H1A	H1B	A2A	A2B	A3A	A3B	

(View Looking from DFBX into Q3)

Corrector Assembly	Corrector Element	Readout Labels		Power Labels I_{HI}	Power Labels I_{LO}	Resistance	Initial Resistance
MQSX	MQSX	A2A	EE8223	A2A	A2B	.06	MQSX
		EE8223	A2B			.65	
		A2A	A2B			7.71	
MCBXA	MCBXV	V3A	EE8113	V3A	V3B	.02	MCBXV
		EE8113	V3B			17.35	
		V3A	V3B			17.36	
	MCBXH	H3A	EE8123	H3A	H3B	.02	MCBXH
		EE8123	H3B			21.30	
		H3A	H3B			21.31	
	MCTX	B6A	EE8613	B6A	B6B	.02	MCTX
		EE8613	B6B			98.12	
		B6A	B6B			98.11	
	MCSX	B3A	EE8313	B3A	B3B	.02	MCSX
		EE8313	B3B			27.85	
		B3A	B3B			27.86	
MCSOX	MCOSX	A4A	EE8423	A4A	A4B	.01	MCOSX
		EE8423	A4B			11.87	
		A4A	A4B			11.88	
	MCOX	B4A	EE8413	B4A	B4B	.01	MCOX
		EE8413	B4B			12.80	
		B4A	B4B			12.81	
	MCSSX	A3A	EE8323	A3A	A3B	.01	MCSSX
		EE8323	A3B			13.23	
		A3A	A3B			13.24	

O. Friangs / Chas Rosser
Technician(s)

11/10/05
Date

Ω
I V

19.0 Beam Tube Insertion

19.1 Inspect the Beam Tube (MC-369522) for damage. Clean Beam Tube using lint free Heavy Duty Wipers (Fermi stock 1660-0150) and Isopropyl Alcohol (Fermi stock 1920-0300) as per Insulated Beam Tube Assembly for Q3 (MD-369838).

Technician(s) _____ Date 11-10-05

19.2 Using Insertion Tooling, insert the Beam Tube (MC-369522) into the Magnet Assembly as per Beam Tube Insertion Tooling (MD-369789).

Technician(s) _____ Date 11-10-05

19.3 Place a mark 45mm from the Kapton insulation on Non-IP End of the Beam Tube.

Technician(s) _____ Date 11-10-05

STOP

19.4 Verify that the placement of the mark in Step 17.4 is correct.

Crew Chief _____ Date 11/10/05

19.5 Using the Wachs Cutter, cut the Non-IP End of the Beam Tube at the mark.

Technician(s) _____ Date 11-10-05

19.6 Measure the inside Beam Tube length and record this measurement below.

Step	Description	Measurement
17.7.1	**Beam Tube Length**	8890
	Subtract 8650mm (±2mm)	**- 8650mm**
17.7.2	**(Length to be cut from IP End)**	= 240

Technician(s) _____ Date 11-10-05

19.7 Using the number recorded in Step 17.7.2, measure and place a mark at the IP End of the Beam Tube.

Technician(s) _____ Date 11-10-05

19.8 Verify that the placement of the mark in Step 17.8 is correct.

STOP

Crew Chief _____ Date 11/10/05

19.9 Using the Wachs Cutter, cut the IP End of the Beam Tube at the mark.

Technician(s) _____ Date 11-10-05

19.10 Measure and verify Beam Tube length is 8650mm (±2mm). Record Actual Beam Tube Length below.

Actual Beam Tube Length	8649 mm

Technician(s) _____ Date 11/10/05

STOP

Responsible Authority/Physicist _____ Date 11/11/05

19.11 Hipot the Beam Tube to coil, heaters and ground. (5kV) (Max. Leakage < 0.5μA)

STOP

Have Crew Chief verify setup and sign below before continuing.

Crew Chief _____ Date 11/11/05

Hipot	Leakage or Failure Voltage	Pass	Fail
Beam Tube to coil, heaters and ground	1535 nA	✓	

Technician(s) _____ Date 11/11/05

STOP

Responsible Authority/Physicist _____ Date 14-DEC-2005

20.0 Dome Installation

20.1 Reposition the IP End Dome as shown in Q3 Cold Mass Welded Assembly (ME-390529) using the Horizontal Witness Line from step 14.9.

Technician(s) _____ Date 11-11-05

20.2 Ensure Spider Assembly (MB-430096) is installed properly as per Q3 Module Assembly (ME-369900).

Responsible Authority _____ Date 11/12/05

20.3 Remove IP End Dome.

Technician(s) _____ Date 11-11-05

20.4 Tack weld the corrector mounting hardware in place as per Q3 Cold Mass Welded Assembly (ME-390529).

Weldor(s) _____ Date 11/11/05

20.5 Putty / Stycast all nuts and bolts that remain unwelded.

Technician(s) _____ Date 11-11-05

20.6 Re-install IP End Dome.

Technician(s) _____ Date 11-11-05

20.7 Tack weld the IP End Dome in place at approximately 6-8 places around the Dome per Q3 Cold Mass Welded Assembly (ME-390529).

Weldor(s) _____ Date 11/11/05

20.8 Weld the IP End Dome, skip weld around to minimize distortion per Q3 Cold Mass Welded Assembly (ME-390529).

Weldor(s) _____ Date 11-14-05

20.9 Mount and adjust the Shipping restraint screws.

Note(s):
Weld to corrector if necessary.

Technician(s) _____ Date 11-11-05

20.10 Reposition the Non-IP End Extension Tube as shown in Q3 Cold Mass Welded Assembly (ME-390529) using the Horizontal Witness Line from step 11.10.

Technician(s) _____ Date 11-11-05

20.11 Tack weld the Extension Tube (MD-390667) to the Cold Mass per (ME-390529).

Weldor(s) _____ Date 11/11/05

20.12 Verify that the Expansion Loop has not been damaged and is functioning properly.

Technician(s) _____ Date 11-11-05

20.13 Reposition the Non-IP End Dome.

Technician(s) _____ Date 11-11-05

20.14 Verify that the Spider Assembly (MB-430096) has not been damaged and is functioning properly.

Technician(s) _____ Date 11-11-05

20.15 Ensure Spider Assembly (MB-430096) is installed properly as per Q3 Module Assembly (ME-369900).

Responsible Authority _____ Date 11/12/05

20.16 Tack weld the Non-IP End Dome in place at approximately 6-8 places around the Dome as per Q3 Cold Mass Welded Assembly (ME-390529).

Weldor(s) Sood _____ Date 11/12/05

20.17 Weld the Extension Tube (MD-390667) to the Cold Mass per (ME-390529).

Weldor(s) _____ Date 11/14/05

20.18 Weld the Non-IP End Dome, skip weld around to minimize distortion as per Q3 Cold Mass Welded Assembly (ME-390529).

Weldor(s) SOOD _____ Date 11/12/05

21.0 Suspension System Assembly

21.1 Clean the Suspension System with Ethyl Alcohol (Fermi stock 1920-0550) and Kimwipes (Fermi stock 1660-2500) or equivalent.

Part Name	Part Number	Quantity	Completed
Fixed Support Assembly	**(ME-390041)**	**1**	✓
Sliding Support Assembly	**(ME-390042)**	**1**	✓
Tie Bar Assembly	**(ME-390400)**	**2**	✓
Tie Bar Shim, 6.4mm (.250")	**(ME-390118)**	**4**	✓
Tie Bar Shim, 2.4mm (.093")	**(ME-390119)**	**4**	✓
Tie Bar Shim, 0.8mm (.031")	**(ME-390120)**	**4**	✓
Suspension System Adjusting Screw	**(MB-390039)**	**8**	✓
M16 x 70mm SHCS	**(MA-393021)**	**8**	✓
Washer (.656" ID x 1.38" OD x .13" THK STN STEEL)	**(MA-390377)**	**8**	✓

Label the IP End and the Non-IP End of the Vacuum Vessel with a temporary sticker or equivalent.

Technician(s) _____ Date 12-14-05

21.2 Insert the Fixed Support Assembly (ME-390041) into the Vacuum Vessel and position at the IP End.

Technician(s) _____ Date 12-14-05

23.4 Hipot the Cable Busses according to tables below. Hipots are done @ 3kV. Hold for 30 seconds.

Ramp Rate	Hi Potential (3000 V)	Grounded	Leakage
10 V/sec	8L	Everything else	1343 nA ~~1.343 mA~~
10 V/sec	5L	Everything else	1297 nA
10 V/sec	5U	Everything else	1306 nA
3 V/sec. Coil - Ground Coil - Strip Htrs	8U	Everything else	986
3 V/sec. Strip Htrs - Ground Strip Htrs - Coil	Strip Heaters	Everything else	1005 nA

ARC Failure @ 2200 V.

Technician(s)

12-14-05
Date

found small area on left side (as viewed from Non IP End) near upper cable clamp where insulation was compromised. This was caused, at least in part, by a damaged G-11 block at clamp area. Results after repair as follows

8L - 1.347
~~8~~5L - 1.333
5U - 1.317
8U - 1.902
HTRS - 1.981

23.5 Hipot according to tables below.

Final Q3 Corrector and Bus Hipots

Looking into Non-IP End of Q3

Looking from DFBX to Q3

Gray – 500V | Others – 0V | ### Others – 0V

MCBXA		V3A	V3B	H3A	H3B	B3A	B3B	B6A	B6B	
Q2		V2A	V2B	H2A	H2B	B4A	B4B	A4A	A4B	
Q1		V1A	V1B	H1A	H1B	A2A	A2B	A3A	A3B	
						MQSX		MCSOX		

MCBXA
MCSOX

This shows the corrector bus in its final configuration as it enters the DFBX

Need to verify that there is no continuity between any of these paths

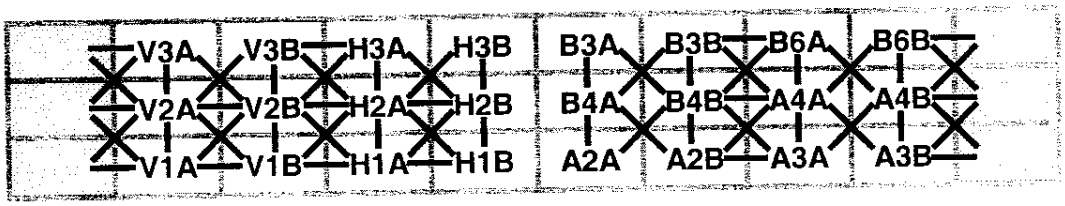

Measurement

Hipot #1
Gray – 500V
Others – 0V

	V3A	V3B	H3A	H3B	B3A	B3B	B6A	B6B	
	V2A	V2B	H2A	H2B	B4A	B4B	A4A	A4B	
	V1A	V1B	H1A	H1B	A2A	A2B	A3A	A3B	

.039 µA

Hipot #2
Gray – 500V
Others – 0V

	V3A	V3B	H3A	H3B	B3A	B3B	B6A	B6B	
	V2A	V2B	H2A	H2B	B4A	B4B	A4A	A4B	
	V1A	V1B	H1A	H1B	A2A	A2B	A3A	A3B	

.045 µA

Hipot #3
Gray – 500V
Others – 0V

	V3A	V3B	H3A	H3B	B3A	B3B	B6A	B6B	
	V2A	V2B	H2A	H2B	B4A	B4B	A4A	A4B	
	V1A	V1B	H1A	H1B	A2A	A2B	A3A	A3B	

.039 µA

Hipot #4
Gray – 500V
Others – 0V

	V3A	V3B	H3A	H3B	B3A	B3B	B6A	B6B	
	V2A	V2B	H2A	H2B	B4A	B4B	A4A	A4B	
	V1A	V1B	H1A	H1B	A2A	A2B	A3A	A3B	

.027 µA

Final Q3 Corrector and Bus Hipots

Looking into Non-IP End of Q3

Looking from DFBX to Q3

Measurement

Hipot #5
Gray – 500V
Others – 0V

	V3A	V3B	H3A	H3B	B3A	B3B	B6A	B6B	
	V2A	V2B	H2A	H2B	B4A	B4B	A4A	A4B	
	V1A	V1B	H1A	H1B	A2A	A2B	A3A	A3B	

.041 µA

Hipot #6
Gray – 500V
Others – 0V

	V3A	V3B	H3A	H3B	B3A	B3B	B6A	B6B	
	V2A	V2B	H2A	H2B	B4A	B4B	A4A	A4B	
	V1A	V1B	H1A	H1B	A2A	A2B	A3A	A3B	

.041 µA

Hipot #7
Gray – 500V
Others – 0V

	V3A	V3B	H3A	H3B	B3A	B3B	B6A	B6B	
	V2A	V2B	H2A	H2B	B4A	B4B	A4A	A4B	
	V1A	V1B	H1A	H1B	A2A	A2B	A3A	A3B	

.033 µA

Technician(s)

12-14-05
Date

24.0 Installation of Hypertronics

24.1 Assemble/Install Hypertronics Connectors, **without Cover** at **Non-IP End** as per Q3 Module Assembly (ME-369900). Pin Numbers for connectors are shown in Table 24.1 below.

Table 24.1

Module	Pin	Fermilab Label	CERN Label	KEK Label	Description
M1	1				Blank Module
M1	2				
M1	3				
M1	4				
M1	5				
M2	1	VTa1Q1	EE1111	a1	Q1 Lead Voltage Tap "a" , primary
M2	2	VTa2Q1	EE1121	a2	Q1 Lead Voltage Tap "a", redundant
M2	3	VTc1Q1	EE1211	c1	Q1 Center Voltage Tap "c", primary
M2	4	VTc2Q1	EE1221	c2	Q1 Center Voltage Tap "c", redundant
M2	5	VTb1Q1	EE1311	b1	Q1 Lead Voltage Tap "b", primary
M3	1	VTc2Q2a	EE1222		Q2a Center Voltage Tap "c" , redundant
M3	2	VTc1Q2a	EE1212		Q2a Center Voltage Tap "c" , primary
M3	3	VTa2Q2a	EE1122		Q2a Lead Voltage Tap "a", redundant
M3	4	VTa1Q2a	EE1112		Q2a Lead Voltage Tap "a", primary
M3	5	VTb2Q1	EE1321	b2	Q1 Lead Voltage Tap "b",redundant
M4	1	VTb1Q2a	EE1312		Q2a Lead Voltage Tap "b", primary
M4	2	VTb2Q2a	EE1322		Q2a Lead Voltage Tap "b", redundant
M4	3	VTb1Q2b	EE1612		Q2b Lead Voltage Tap "b", primary
M4	4	VTb2Q2b	EE1622		Q2b Lead Voltage Tap "b", redundant
M4	5	VTc1Q2b	EE1512		Q2b Center Voltage Tap "c" , primary
M5	1	VTa2Q3	EE1123	a2	Q3 Lead Voltage Tap "a", redundant
M5	2	VTa1Q3	EE1113	a1	Q3 Lead Voltage Tap "a", primary
M5	3	VTa2Q2b	EE1422		Q2b Lead Voltage Tap "a", redundant
M5	4	VTa1Q2b	EE1412		Q2b Lead Voltage Tap "a", primary
M5	5	VTc2Q2b	EE1522		Q2b Center Voltage Tap "c" , redundant
M6	1	VTc1Q3	EE1213	c1	Q3 Center Voltage Tap "c" , primary
M6	2	VTc2Q3	EE1223	c2	Q3 Center Voltage Tap "c" , redundant
M6	3	VTb1Q3	EE1313	b1	Q3 Lead Voltage Tap "b" , primary
M6	4	VTb2Q3	EE1323	b2	Q3 Lead Voltage Tap "b" , redundant
M6	5	Empty	Empty		No connection
M7	1				Blank Module
M7	2				
M7	3				
M7	4				
M7	5				

21.3 Install the Suspension System Adjusting Screws (MB-390039) and Socket Head Cap Screws (MA-393021) into the Vacuum Vessel to hold the Fixed Support Assembly in place. Coat all screw threads with Molybdenum Disulfide prior to installation.

[redacted]

Technician(s) _____ Date 11-19-05

21.4 Adjust the Vertical and rotational alignment of the Supports using the Suspension System Adjusting Screws (MB-390039). Ensure all four screws are in contact with the Support and that Diametrically Opposing Support Lugs are equidistant from the Vacuum Vessel Wall.

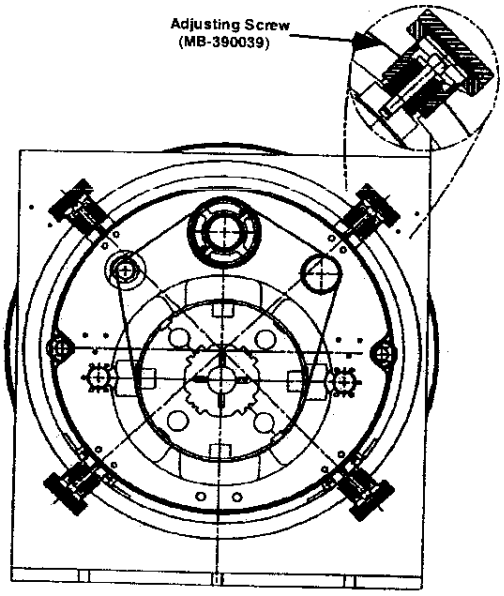

Technician(s) _____ Date 11-19-05

21.5 Insert the Sliding Support Assembly (ME-390042) in to the Vacuum Vessel and position at the Non-IP End.

Technician(s) _____ Date 11-19-05

21.6 Install the Suspension System Adjusting Screws (MB-390039) and Socket Head Cap Screws (MA-393021) into the Vacuum Vessel to hold the Fixed Support Assembly in place. Coat all screw threads with Molybdenum disulfide prior to installation.

[redacted]

Technician(s) _____ Date 11-19-05

21.7 Adjust the Vertical and rotational alignment of the Supports using the Suspension System Adjusting Screws (MB-390039). Ensure all four screws are in contact with the Support and that Diametrically Opposing Support Lugs are equidistant from the Vacuum Vessel Wall.

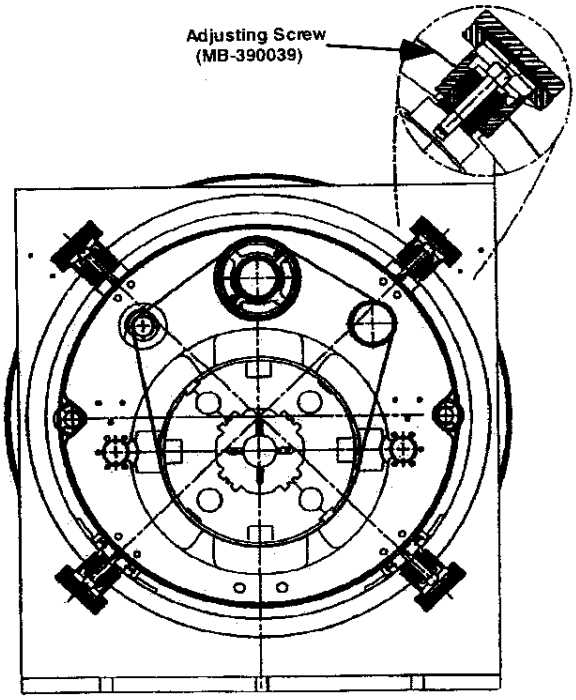

Technician(s) _____ Date 11-8-05

21.8 Assemble the Suspension System using the Fixed Support Assembly (ME-390041), the Sliding Support Assemblies (ME-390042) and the Tie Bar Assemblies (MC-390167). Insert Tie Bar Shims (MC-390118), (MB-390119) and (MB-390120) between the Sliding Support Assemblies (ME-390042) and the Tie Bar Assemblies (MC-390400) as required. (Reference drawing: ME-390525).

Technician(s) _____ Date 11-15-05

21.9 Measure the distance between the Suspension Rings at the bottom of the Threaded Rods and record measurements below. Copy this page and place copy in designated book for later reference. (TR-333730, Q3 Cryostat Final Assembly, Step 5.1).

Non-IP North to IP North 4158 mm

Non-IP South to IP South 4158 mm

Technician(s) _____ Date 11/21/05

21.10 Measure from the face of the IP end vacuum vessel flange to the inside surface of the IP end suspension system.

Record measurement here: 209.5

Technician(s) _____ Date 11-15-05

21.11 Measure from the face of the Non-IP end vacuum vessel flange to the inside surface of the Non-IP end suspension system.

Record measurement here: 208.5

Technician(s) _____ Date 11-15-05

21.12 Label the IP End Support and the Non-IP End Support. (Writing on the G-11 Support is acceptable).

Technician(s) _____ Date 11/21/05

21.13 Loosen each Suspension System Adjusting Screw (MB-390039) 1/2 turn and remove the Suspension System from the Vacuum Vessel.

Technician(s) _____ Date _____

21.14 Configure the Suspension Tooling for Q3 Assembly per Cryostat Layout Tooling & Assembly (ME-364604). Place Suspension Assembly on the tooling and make necessary adjustments to the tooling.

Technician(s) _____ Date 11-22-05

21.15 Assemble the Suspension Mounting Brackets (MD-390279) to the Support Assemblies.

Technician(s) _____ Date 11-22-05

21.16 Slide the Suspension System over the Cold Mass and place on tooling. The Suspension system may be disassembled during this step. Record shim sizes and locations prior to disassembly.

Note(s):

Ensure that the Suspension System is configured properly to the Cold Mass with respect to the IP and Non-IP Ends.

Technician(s) _____ Date 11-22-05

STOP

21.17 Verify locking collars exist only at IP End support.

Crew Chief _____ Date 11-22-05

21.18 Establish alignment between the Cold Mass and the Support system. Install shims between the Brass Slide Bars and the Stainless Steel Blocks on each support as needed.

Record Shim size and location below.

East-North .058 **East South** .058

West-North .058 **West-South** .058

Technician(s) _____ Date 11-22-05

STOP

21.19 Verify the Alignment of the Cold Mass and the Support System.

Crew Chief _____ Date 11-22-05

21.20 Weld the Cold Mass to the Outboard Cold Mass Brackets (MB-430082) as per Q3 Module Assembly (ME-390900).

Weldor(s) _____ Date 11/22/05

21.21 Add 112.5mm to the number recorded in Step 21.10 and record below.

Recorded measurement from Step 21.10: 2009.5

Add: + 112.5 mm

Record New Total: 2122.0

Technician(s) Date 11-23-05

21.22 Add 337.5mm to the number recorded in Step 21.11 and record below.

Recorded Measurement from Step 21.11: 2008.5

Add: + 337.5 mm

Record New Total: 2346

Technician(s) Date 11-23-05

21.23 Position the IP End of the Beam Tube at the distance recorded in Step 21.21 from the inside surface of the IP G-10 support.

Technician(s) Date 11-23-05

21.24 Measure the Non-IP End of the Beam Tube from the inside surface of the Non-IP End support. Compare this number to the number recorded in Step 21.22.

Note(s):

These numbers should be the same to within 1 mm. If these numbers differ greater than 1 mm, contact Responsible Authority/Physicist.

Record measurement here: 2344

Recorded measurement from Step 21.22: 2346

Technician(s) Date 11-23-05

21.25 Measure from the IP End of the Beam Tube to the Spot Face on the IP End Dome. Record below.

Record measurement here: 24

Technician(s) Date 11-23-01

21.26 Subtract 15mm from the number recorded in Step 21.25. This is the Spacer width for the IP End. Record below.

Recorded Measurement from Step 21.25: 24

Subtract: - 15mm

Spacer width for the IP End: 9

Technician(s) Date 11-23-01

21.27 Measure from the Non-IP End of the Beam Tube to the Spot Face on the Non-IP End Dome. Record below.

Record measurement here: 18

Technician(s) Date 11-23-01

21.28 Subtract 15mm from the number recorded in Step 21.27. This is the Spacer width for the Non-IP End. Record below.

Recorded Measurement from Step 21.27: 18

Subtract: - 15mm

Spacer width for the Non-IP End: 3 mm

Technician(s) Date 11-23-01

23.0 Electrical Inspection

23.1 Perform an electrical inspection on each of the Individual Quadrants and the Cold Mass. Refer to the Valhalla and Leader Free Standing Coil Measurement Procedure (ES-292306).

To measure the Resistance of a Q3 Cold Mass:

1. Use Valhalla Scientific 4300B digital micro-ohmmeter.
2. Set Test Current to 0.1 amp.
3. Set Scale to 2V full scale.
4. Turn temperature compensation on.
5. Turn test current off.
6. Connect I_{HI} to "A" Lead as shown in figure 23.1-A.
7. Connect I_{LO} to "B" Lead as shown in figure 23.1-A.
8. Turn test current on.
9. Connect V_{HI} and V_{LO} to voltage taps as shown in resistance table.
10. To measure Total with leads, connect V_{HI} to "A" Lead and V_{LO} to "B" Lead.
11. At the IP End, jumper the 8Ka leads as shown in Figure 23.1-A.
12. Read resistance and record in traveler.

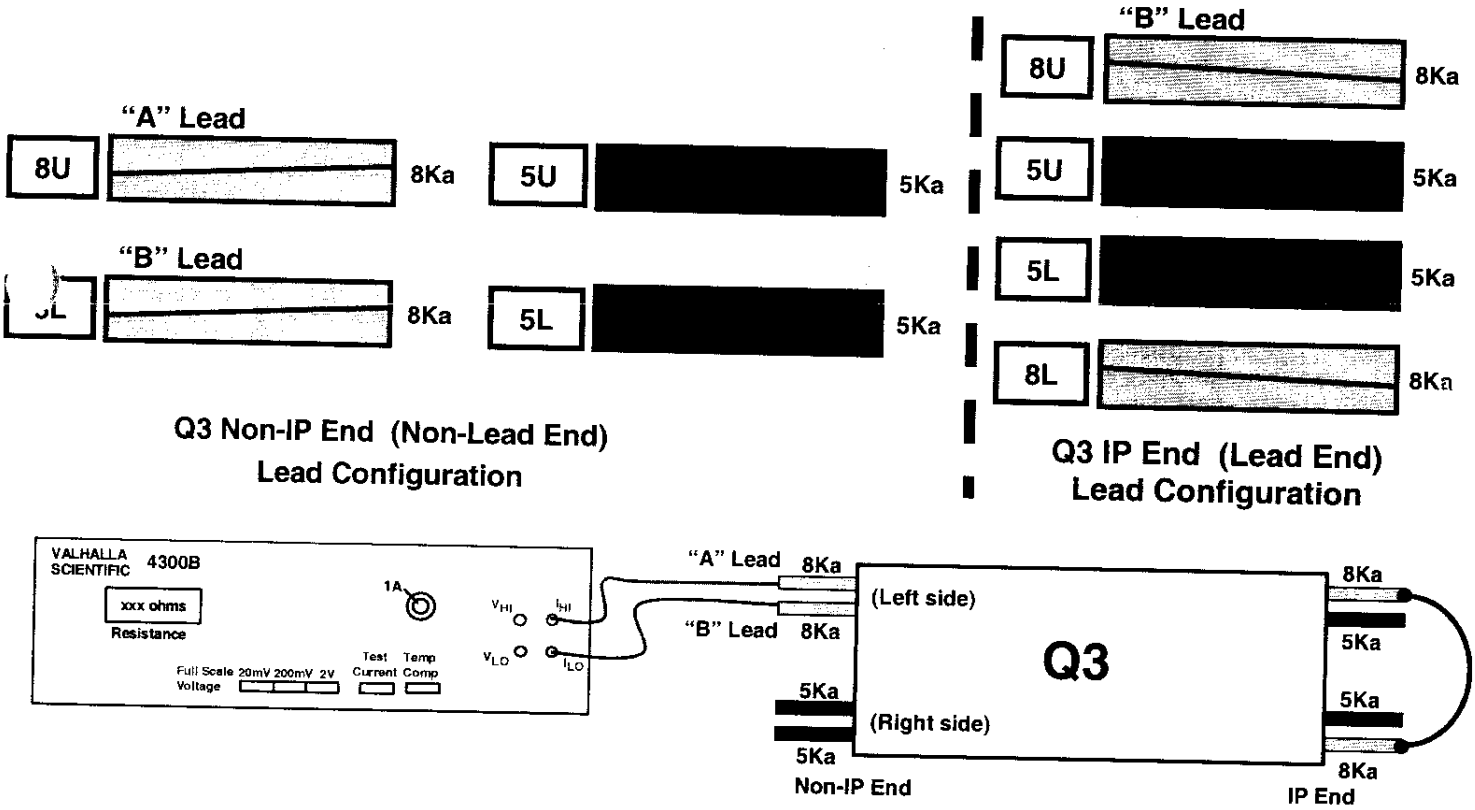

Figure 23.1-A

(Q3) Resistance				Nominal 3.35 to 3.45 Ω
Voltage Tap Serial Numbers				Total Resistance
Connect	Fermi	CERN	KEK	
V_{HI}	VTa1Q3	EE1113	a1	3.40 Ω
V_{LO}	VTc1Q3	EE1213	c1	
V_{HI}	VTc1Q3	EE1213	c1	3.420 Ω
V_{LO}	VTb1Q3	EE1313	b1	

				Total Resistance with Leads
				Nominal 6.75 to 6.85
V_{HI}	VTa1Q3	EE1113	a1	6.827 Ω
V_{LO}	VTb1Q3	EE1313	b1	
V_{HI}	Q4 Power Lead			6.859 Ω
V_{LO}	Q3 Power Lead			

Technician(s)

Date

Check resistance of Redundant Voltage Taps.

Q3 Redundant Voltage Taps				Nominal 3.35 to 3.45 Ω
Connect	Fermi	CERN	KEK	Resistance
V_{HI}	VTa2Q3	EE1123	a2	3.407 Ω
V_{LO}	VTc2Q3	EE1223	c2	
V_{HI}	VTc2Q3	EE1223	c2	3.420 Ω
V_{LO}	VTb2Q3	EE1323	b2	

Technician(s)

Date

To measure Ls and Q of a Q3 Cold Mass:

1. Use Agilent 4263B LCR Meter.
2. Turn power on by pushing line button. Wait 30 seconds until display screen is lit.
3. Recall program #1. To do this, push recall (Rcl), then push #1, then push Enter.
4. Push Auto/Hold button to release hold.
5. Verify that the frequency displayed in the upper right corner of the display screen is 1000 Hz and the level recorded in the lower right corner of the display screen is 1V or 1000 mV.
6. Connect H_{cur} to "A" power lead as shown in figure 23.1-B.
7. Connect L_{cur} to "B" power lead as shown in figure 23.1-B.
8. Connect H_{pot} and L_{pot} buttons to voltage taps as shown below.
9. Read Ls and Q from display and record in table.

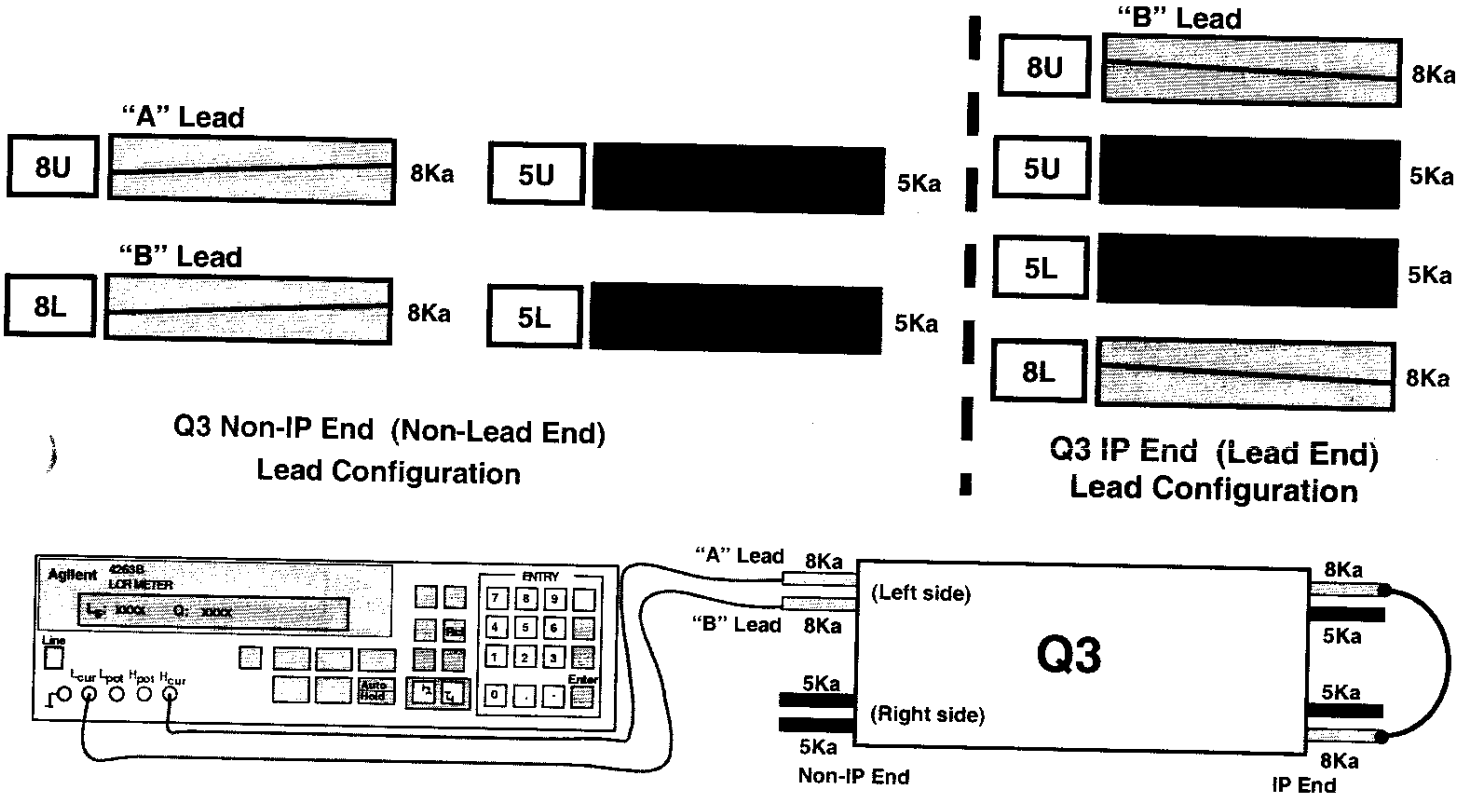

Figure 23.1-B

(Q3) Inductance				Nominal 15 to 16 mH
Voltage Tap Serial Numbers				Total Inductance
Connect	Fermi	CERN	KEK	
H_{POT}	VTa1Q3	EE1113	a1	15.238 mH
L_{POT}	VTc1Q3	EE1213	c1	
H_{POT}	VTc1Q3	EE1213	c1	15.236 mH
L_{POT}	VTb1Q3	EE1313	b1	

				Nominal 30 to 32 mH
				Total Inductance
H_{POT}	VTa1Q3	EE1113	a1	30.469 mH
L_{POT}	VTb1Q3	EE1313	b1	
H_{POT}	Q4 Power Lead			30.475 mH
L_{POT}	Q3 Power Lead			

(Q3) Q-Factor				Nominal 1.0 to 1.2
Voltage Tap Serial Numbers				Total Q
Connect	Fermi	CERN	KEK	
H_{POT}	VTa1Q3	EE1113	a1	1.1
L_{POT}	VTc1Q3	EE1213	c1	
H_{POT}	VTc1Q3	EE1213	c1	1.1
L_{POT}	VTb1Q3	EE1313	b1	

				Nominal 1.0 to 1.2
				Total Q
H_{POT}	VTa1Q3	EE1113	a1	1.1
L_{POT}	VTb1Q3	EE1313	b1	
H_{POT}	Q4 Power Lead			1.1
L_{POT}	Q3 Power Lead			

C. Fuery
Technician(s)

11/23/05
Date

To measure the resistance of a Thermometer (RTD):

1. Use Hewlett Packard HP3457A digital multimeter.
2. Record temperature of building within +/- 5 degrees.
3. Press line button to turn line on.
4. Connect wires as shown in Figure below.
   U+ (Black) to Sense HI
   I+ (Yellow) to Input HI
   U- (Red) to Sense LO
   I- (Green) to Input LO
5. Push blue button (function key) once.
6. Push OHMF button.
7. Verify arrow in readout is above the 4WΩ (meaning a 4 wire resistance measurement).
8. Read resistance in ohms and record in traveler.

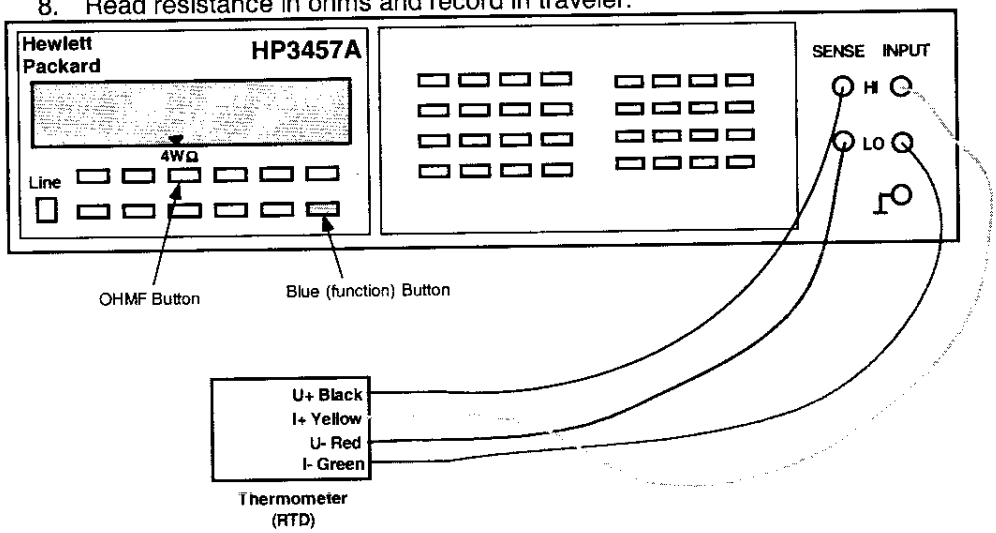

To measure the resistance of a Cryogenic (Warm-up) Heater

1. Use Hewlett Packard HP3457A digital multimeter.
2. Record temperature of building within +/- 5 degrees.
3. Press line button to turn line on.
4. Connect wires as shown in Figure below.
5. Push blue button (function key) once.
6. Push OHMF button.
7. Verify arrow in readout is above the 4WΩ (meaning a 4 wire resistance measurement).
   Note: Although this is technically a 4 wire measurement, it is effectively a 2 wire measurement, since there are only 2 wires connected to each heater.
8. Read resistance in ohms and record in traveler.

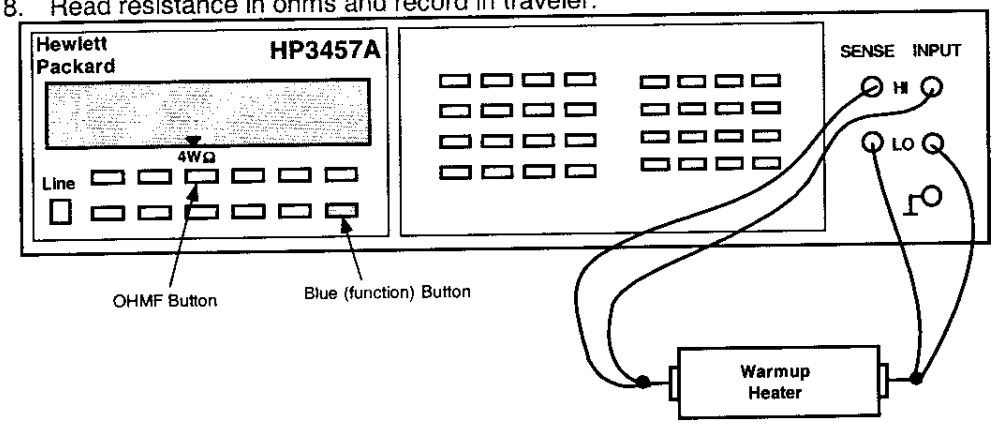

Q3 - RTD's and Cryogenic (warm-up) Heaters				
Temperature of Building (± 5°): _____				
Component	Fermi	CERN	Range	Resistance
Q3 RTD, primary	TaQ3	TT8313	60 to 70 Ω	71.809 Ω
Q3 RTD, redundant	TbQ3	TT8323	60 to 70 Ω	65.129 Ω
Q3 Cryogenic (warm-up) Heater (LE) - wire at top (CERN #1 I+)	W1aQ3	EH8313+	16 to 18.5 Ω	16.53 Ω
Q3 Cryogenic (warm-up) Heater (LE) - wire at bottom (CERN #1 I-)	W2aQ3	EH8313-		
Q3 Cryogenic (warm-up) Heater (Non-LE) - wire at top (CERN #2 I+)	W1bQ3	EH8323+	16 to 18.5 Ω	16.18 Ω
Q3 Cryogenic (warm-up) Heater (Non-LE) - wire at bottom (CERN #2 I-)	W2bQ3	EH8323-		

C. Fuang
Technician(s)

11/23/05
Date

Using the Hewlett Packard HP3457A digital multimeter, measure the Protection (Strip) Heater Resistance for Q3.

Q3 Protection (Strip) Heater Resistance					
Fermi	CERN	KEK	Description	Limit	Resistance
H1aQ3	YT1113+	HA1	Circuit A	28 to 32 Ω	28.64 Ω
H2aQ3	YT1113-	HA2			
H1bQ3	YT1123+	HB1	Circuit B	28 to 32 Ω	28.59 Ω
H2bQ3	YT1123-	HB2			

C. Fuang
Technician(s)

11/23/05
Date

23.2 Check Q1 & Q2 Instrumentation Bus Wires for Continuity.

Module	Pin	Fermi	CERN	KEK	Description	Done
M2	1	VTa1Q1	EE1111	a1	Q1 Lead Voltage Tap "a" , primary	✓
M2	2	VTa2Q1	EE1121	a2	Q1 Lead Voltage Tap "a", redundant	✓
M2	3	VTc1Q1	EE1211	c1	Q1 Center Voltage Tap "c", primary	✓
M2	4	VTc2Q1	EE1221	c2	Q1 Center Voltage Tap "c", redundant	✓
M2	5	VTb1Q1	EE1311	b1	Q1 Lead Voltage Tap "b", primary	✓
M3	1	VTc1Q2a	EE1212		Q2a Center Voltage Tap "c", primary	✓
M3	3	VTa2Q2a	EE1122		Q2a lead Voltage Tap "a", redundant	✓
M3	4	VTa1Q2a	EE1112		Q2a Lead Voltage Tap "a", primary	✓
M3	5	VTb2Q1	EE1321	b2	Q1 Lead Voltage Tap "b", redundant	✓
M4	1	VTc2Q2a	EE1222		Q2a Center Voltage Tap "c", redundant	✓
M4	3	VTb1Q2a	EE1312		Q2a Lead Voltage Tap "b", primary	✓
M4	4	VTb2Q2a	EE1322		Q2a Lead Voltage Tap "b", redundant	✓
M4	5	VTb1Q2b	EE1612		Q2b lead Voltage Tap "b", primary	✓
M5	2	VTc2Q2b	EE1522		Q2b Center Voltage Tap "c", redundant	✓
M5	3	VTc1Q2b	EE1512		Q2b Center Voltage Tap "c", primary	✓
M5	5	VTb2Q2b	EE1622		Q2b Lead Voltage Tap "b" redundant	✓
M6	1	VTa1Q2b	EE1412		Q2b Lead Voltage Tap "a", primary	✓
M6	2	VTa2Q2b	EE1422		Q2b Lead Voltage Tap "a", redundant	✓
M8	1	VTH1	EE8121		Corrector voltage tap Q1-H1 (skew dipole) (on MCBX, MCBXH, A+ lead)	✓
M8	2	VTV1	EE8111		Corrector voltage tap Q1-V1 (normal dipole) (on MCBX, MCBXV A+ lead)	✓
M8	3	VTH2	EE8122		Corrector voltage tap Q2-H2 (skew dipole) (on MCBX, MCBXH, A+ lead)	✓
M8	4	VTV2	EE8112		Corrector voltage tap Q2-V2 (normal dipole) (on MCBX, MCBXV, A+ lead)	✓
M10	1	W1aQ1	EH8311+		Q1 Cryogenic Heater lead end - wire at top (CERN #1 I+)	✓
M10	2	W2aQ1	EH8311-		Q1 Cryogenic Heater lead end - wire at bottom (CERN #1 I-)	✓
M10	3	W1bQ1	EH8321+		Q1 Cryogenic Heater non-lead end - wire at top (CERN #2 I+)	✓
M10	4	W2bQ1	EH8321-		Q1 Cryogenic Heater non-lead end - wire at bottom (CERN #2 I-)	✓
M11	1	W1aQ2A	EH8312+		Q2A Cryogenic Heater lead end - wire toward cold mass end plate (CERN #1 I+)	✓
M11	2	W2aQ2A	EH8312-		Q2A Cryogenic Heater lead end - wire toward cold mass mag center (CERN #1 I-)	✓
M11	3	W1bQ2A	EH8322+		Q2A Cryogenic Heater non-lead end- wire toward cold mass end plate (CERN #2 I+)	✓

Module	Pin	Fermi	CERN	KEK	Description	Done
M11	4	W2bQ2A	EH8322-		Q2A Cryogenic Heater non-lead end- wire toward cold mass mag center (CERN #2 I-)	✓
M12	1	W1aQ2B	EH8332+		Q2B Cryogenic Heater lead end - wire toward cold mass end plate (CERN #1 I+)	✓
M12	2	W2aQ2B	EH8332-		Q2B Cryogenic Heater lead end - wire toward cold mass mag center (CERN #1 I-)	✓
M12	3	W1bQ2B	EH8342+		Q2B Cryogenic Heater non-lead end- wire toward cold mass end plate (CERN #2 I+)	✓
M12	4	W2bQ2B	EH8342-		Q2B Cryogenic Heater non-lead end- wire toward cold mass mag center (CERN #2 I-)	✓
M14	1	H1aQ1	YT1111+	HA1	Q1 Protection (Strip) Heater, ("a" circuit) (CERN lead #1+)	✓
M14	3	H2aQ1	YT1111-	HA2	Q1Protection (Strip) Heater, ("a" circuit) (CERN lead #1-)	✓
M14	5	H1bQ1	YT1121+	HB1	Q1 Protection (Strip) Heater, ("b" circuit) (CERN lead #2+)	✓
M15	2	H1aQ2a	YT1112+		Q2a Protection (Strip) Heater, 1-4 & 2-3 circuit (FNAL lead A+) (CERN lead #1+)	✓
M15	4	H2bQ1	YT1121-	HB2	Q1 Protection (Strip) Heater, ("b" circuit) (CERN lead #2-)	✓
M16	1	H2aQ2a	YT1112-		Q2a Protection (Strip) Heater, 1-4 & 2-3 circuit (FNAL lead A-) (CERN lead #1-)	✓
M16	3	H1bQ2a	YT1122+		Q2a Protection (Strip) Heater, 1-2 & 3-4 circuit (FNAL lead B+) (CERN lead#2+)	✓
M16	5	H2bQ2a	YT1122-		Q2a Protection (Strip) Heater, 1-2 & 3-4 circuit (FNAL lead B-) (CERN lead #2-)	✓
M17	2	H2aQ2b	YT1132-		Q2b Protection (Strip) Heater, 1-4 & 2-3 circuit (FNAL lead A-) (CERN lead #1-)	✓
M17	4	H1aQ2b	YT1132+		Q2b Protection (Strip) Heater, 1-4 & 2-3 circuit (FNAL lead A+) (CERN lead #1+)	✓
M18	1	H1bQ2b	YT1142+		Q2b Protection (Strip) Heater, 1-2 & 3-4 circuit (FNAL lead B+) (CERN lead#2+)	✓
M18	3	H2bQ2b	YT1142-		Q2b Protection (Strip) Heater, 1-2 & 3-4 circuit (FNAL lead B-) (CERN lead #2-)	✓
M20	1	TaQ1_I+	TT8311 I+		Q1 RTD, primary Wire color: Yellow	✓
M20	2	TaQ1_I-	TT8311 I-		Q1 RTD, primary Wire color: Green	✓
M20	3	TaQ1_V+	TT8311 U+		Q1 RTD, primary Wire color: Black	✓
M20	4	TaQ1_V-	TT8311 U-		Q1 RTD, primary Wire color: Red	✓
M20	5	TbQ1_I+	TT8321 I+		Q1 RTD, redundant: Wire color: Yellow	✓
M20	6	TbQ1_I-	TT8321 I-		Q1 RTD, redundant: Wire color: Green	✓
M20	11	TbQ1_V+	TT8321 U+		Q1 RTD, redundant: Wire color: Black	✓
M20	10	TbQ1_V-	TT8321 U-		Q1 RTD, redundant: Wire color: Red	✓
M20	9	TaQ2a_I+	TT8312 I+		Q2a RTD, primary Wire color: Yellow	✓
M20	8	TaQ2a_I-	TT8312 I-		Q2a RTD, primary Wire color: Green	✓

LHC Serial No.: LMQXC07-0
Notes:

Module	Pin	Fermi	CERN	KEK	Description	Done
M20	7	TaQ2a_V+	TT8312 U+		Q2a RTD, primary Wire color: Black	✓
M20	12	TaQ2a_V-	TT8312 U-		Q2a RTD, primary Wire color: Red	✓
M20	13	TbQ2a_I+	TT8322 I+		Q2a RTD, redundant: Wire color: Yellow	✓
M20	14	TbQ2a_I-	TT8322 I-		Q2a RTD, redundant: Wire color: Green	✓
M20	15	TbQ2a_V+	TT8322 U+		Q2a RTD, redundant: Wire color: Black	✓
M20	16	TbQ2a_V-	TT8322 U-		Q2a RTD, redundant: Wire color: Red	✓
M21	1	TaQ2b_I+	TT8332 I+		Q2b RTD, primary Wire color: Yellow	✓
M21	2	TaQ2b_I-	TT8332 I-		Q2b RTD, primary Wire color: Green	✓
M21	3	TaQ2b_V+	TT8332 U+		Q2b RTD, primary Wire color: Black	✓
M21	4	TaQ2b_V-	TT8332 U-		Q2b RTD, primary Wire color: Red	✓
M21	5	TbQ2b_I+	TT8342 I+		Q2b RTD, redundant: Wire color: Yellow	✓
M21	6	TbQ2b_I-	TT8342 I-		Q2b RTD, redundant: Wire color: Green	✓
M21	11	TbQ2b_V+	TT8342 U+		Q2b RTD, redundant: Wire color: Black	✓
M21	10	TbQ2b_V-	TT8342 U-		Q2b RTD, redundant: Wire color: Red	✓

Technician(s) — Date: 11/28/05

Responsible Authority/Physicist — Date: 28/Nov/2005

23.3 Using the Valhalla 4300B, connect 10mA applied voltage thru the corrector Power Leads. Measure Resistance and record in the table below. Record Initial resistance of Corrector Element and record below.

Corrector Bus Leads

	V3A	V3B	H3A	H3B	B3A	B3B	B6A	B6B	
	V2A	V2B	H2A	H2B	B4A	B4B	A4A	A4B	
	V1A	V1B	H1A	H1B	A2A	A2B	A3A	A3B	

(View Looking from DFBX into Q3)

Corrector Assembly	Corrector Element	Readout Labels V HI	Readout Labels V LO	Power Labels I_{HI}	Power Labels I_{LO}	Resistance	Initial Resistance
MQSX	MQSX	A2A	EE8223	A2A	A2B	.06	MQSX
		EE8223	A2B			7.69	
		A2A	A2B			7.74	
MCBXA	MCBXV	V3A	EE8113	V3A	V3B	.10	MCBXV
		EE8113	V3B			17.42	
		V3A	V3B			17.43	
	MCBXH	H3A	EE8123	H3A	H3B	.02	MCBXH
		EE8123	H3B			39.51	
		H3A	H3B			39.39	
	MCTX	B6A	EE8613	B6A	B6B	.2	MCTX
		EE8613	B6B			48.52	
		B6A	B6B			48.54	
	MCSX	B3A	EE8313	B3A	B3B	.02	MCSX
		EE8313	B3B			27.97	
		B3A	B3B			27.98	
MCSOX	MCOSX	A4A	EE8423	A4A	A4B	.01	MCOSX
		EE8423	A4B			11.93	
		A4A	A4B			11.93	
	MCOX	B4A	EE8413	B4A	B4B	.01	MCOX
		EE8413	B4B			12.96	
		B4A	B4B			12.97	
	MCSSX	A3A	EE8323	A3A	A3B	.01	MCSSX
		EE8323	A3B			13.29	
		A3A	A3B			13.30	

Greg Romero
Technician(s)

11/23
Date

LHC Serial No.: LMQXC07-0
Notes:

23.4 Hipot the Cable Busses according to tables below. Hipots are done @ 3kV. Hold for 30 seconds.

Ramp Rate	Hi Potential (3000 V)	Grounded	Leakage
10 V/sec	8L	Everything else	119 nA
10 V/sec	5L	Everything else	116 nA
10 V/sec	5U	Everything else	103 nA
3 V/sec. Coil - Ground Coil - Strip Htrs	8U	Everything else	338 nA
3 V/sec. Strip Htrs - Ground Strip Htrs - Coil	Strip Heaters	Everything else	740 nA

O. Fuentes / Chris Romero
Technician(s)

11/28/05
Date

23.5 Hipot according to tables below.

Final Q3 Corrector and Bus Hipots

Looking into Non-IP End of Q3

Looking from DFBX to Q3

Gray – 500V | Others – 0V | ### Others – 0V

MCBXA		V3A	V3B	H3A	H3B	B3A	B3B	B6A	B6B		MCBXA
Q2		V2A	V2B	H2A	H2B	B4A	B4B	A4A	A4B		MCSOX
Q1		V1A	V1B	H1A	H1B	A2A	A2B	A3A	A3B		
						MQSX		MCSOX			

This shows the corrector bus in its final configuration as it enters the DFBX

Need to verify that there is no continuity between any of these paths

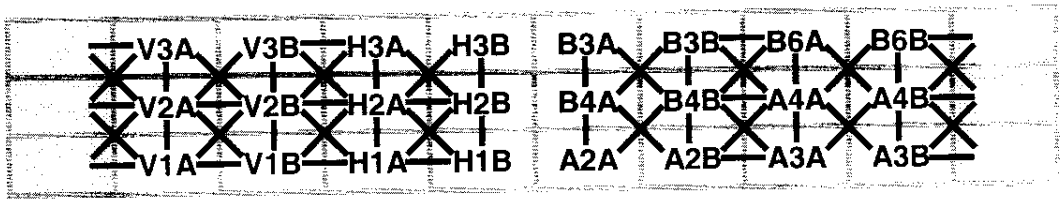

Measurement

Hipot #1
Gray – 500V
Others – 0V

	V3A	V3B	H3A	H3B	B3A	B3B	B6A	B6B	
	V2A	V2B	H2A	H2B	B4A	B4B	A4A	A4B	
	V1A	V1B	H1A	H1B	A2A	A2B	A3A	A3B	

.082 µA

Hipot #2
Gray – 500V
Others – 0V

	V3A	V3B	H3A	H3B	B3A	B3B	B6A	B6B	
	V2A	V2B	H2A	H2B	B4A	B4B	A4A	A4B	
	V1A	V1B	H1A	H1B	A2A	A2B	A3A	A3B	

.007 µA

Hipot #3
Gray – 500V
Others – 0V

	V3A	V3B	H3A	H3B	B3A	B3B	B6A	B6B	
	V2A	V2B	H2A	H2B	B4A	B4B	A4A	A4B	
	V1A	V1B	H1A	H1B	A2A	A2B	A3A	A3B	

.005 µA

Hipot #4
Gray – 500V
Others – 0V

	V3A	V3B	H3A	H3B	B3A	B3B	B6A	B6B	
	V2A	V2B	H2A	H2B	B4A	B4B	A4A	A4B	
	V1A	V1B	H1A	H1B	A2A	A2B	A3A	A3B	

.004 µA

Final Q3 Corrector and Bus Hipots

Looking into Non-IP End of Q3

Looking from DFBX to Q3

Measurement

Hipot #5
Gray – 500V
Others – 0V

	V3A	V3B	H3A	H3B	B3A	B3B	B6A	B6B	
	V2A	V2B	H2A	H2B	B4A	B4B	A4A	A4B	
	V1A	V1B	H1A	H1B	A2A	A2B	A3A	A3B	

OF ~~.015~~ .015 µA

Hipot #6
Gray – 500V
Others – 0V

	V3A	V3B	H3A	H3B	B3A	B3B	B6A	B6B	
	V2A	V2B	H2A	H2B	B4A	B4B	A4A	A4B	
	V1A	V1B	H1A	H1B	A2A	A2B	A3A	A3B	

.006 µA

Hipot #7
Gray – 500V
Others – 0V

	V3A	V3B	H3A	H3B	B3A	B3B	B6A	B6B	
	V2A	V2B	H2A	H2B	B4A	B4B	A4A	A4B	
	V1A	V1B	H1A	H1B	A2A	A2B	A3A	A3B	

.004 µA

C. Fraser / Gina Flores
Technician(s)

11/28/05
Date

24.0 Installation of Hypertronics

24.1 Assemble/Install Hypertronics Connectors, **without Cover** at **Non-IP End** as per Q3 Module Assembly (ME-369900). Pin Numbers for connectors are shown in Table 24.1 below.

Table 24.1

Module	Pin	Fermilab Label	CERN Label	KEK Label	Description
M1	1				Blank Module
M1	2				
M1	3				
M1	4				
M1	5				
M2	1	VTa1Q1	EE1111	a1	Q1 Lead Voltage Tap "a" , primary
M2	2	VTa2Q1	EE1121	a2	Q1 Lead Voltage Tap "a", redundant
M2	3	VTc1Q1	EE1211	c1	Q1 Center Voltage Tap "c", primary
M2	4	VTc2Q1	EE1221	c2	Q1 Center Voltage Tap "c", redundant
M2	5	VTb1Q1	EE1311	b1	Q1 Lead Voltage Tap "b", primary
M3	1	VTc2Q2a	EE1222		Q2a Center Voltage Tap "c" , redundant
M3	2	VTc1Q2a	EE1212		Q2a Center Voltage Tap "c" , primary
M3	3	VTa2Q2a	EE1122		Q2a Lead Voltage Tap "a", redundant
M3	4	VTa1Q2a	EE1112		Q2a Lead Voltage Tap "a", primary
M3	5	VTb2Q1	EE1321	b2	Q1 Lead Voltage Tap "b",redundant
M4	1	VTb1Q2a	EE1312		Q2a Lead Voltage Tap "b", primary
M4	2	VTb2Q2a	EE1322		Q2a Lead Voltage Tap "b", redundant
M4	3	VTb1Q2b	EE1612		Q2b Lead Voltage Tap "b", primary
M4	4	VTb2Q2b	EE1622		Q2b Lead Voltage Tap "b", redundant
M4	5	VTc1Q2b	EE1512		Q2b Center Voltage Tap "c" , primary
M5	1	VTa2Q3	EE1123	a2	Q3 Lead Voltage Tap "a", redundant
M5	2	VTa1Q3	EE1113	a1	Q3 Lead Voltage Tap "a", primary
M5	3	VTa2Q2b	EE1422		Q2b Lead Voltage Tap "a", redundant
M5	4	VTa1Q2b	EE1412		Q2b Lead Voltage Tap "a", primary
M5	5	VTc2Q2b	EE1522		Q2b Center Voltage Tap "c" , redundant
M6	1	VTc1Q3	EE1213	c1	Q3 Center Voltage Tap "c" , primary
M6	2	VTc2Q3	EE1223	c2	Q3 Center Voltage Tap "c" , redundant
M6	3	VTb1Q3	EE1313	b1	Q3 Lead Voltage Tap "b" , primary
M6	4	VTb2Q3	EE1323	b2	Q3 Lead Voltage Tap "b" , redundant
M6	5	Empty	Empty		No connection
M7	1				Blank Module
M7	2				
M7	3				
M7	4				
M7	5				

Table 24.1 (continued)

Module	Pin	Fermilab Label	CERN Label	KEK Label	Description
M8	1	VTH1	EE8121		Corrector voltage tap Q1-H1 (skew dipole) (on MCBX, MCBXH, A+ lead)
M8	2	VTV1	EE8111		Corrector voltage tap Q1-V1 (normal dipole) (on MCBX, MCBXV A+ lead)
M8	3	VTH2	EE8122		Corrector voltage tap Q2-H2 (skew dipole) (on MCBX, MCBXH, A+ lead)
M8	4	VTV2	EE8112		Corrector voltage tap Q2-V2 (normal dipole) (on MCBX, MCBXV, A+ lead)
M8	5	Empty	Empty		No connection
M9	1	VTH3	EE8123		Corrector voltage tap Q3-H3 (skew dipole) (on
M9	2	VTV3	EE8113		Corrector voltage tap Q3-V3 (normal dipole) (on
M9	3	VTA2	EE8223		Corrector voltage tap Q3-A2 (skew quadrupole) (on
M9	4	VTA3	EE8323		Corrector voltage tap Q3-A3 (skew sextupole) (on
M9	5	Empty	Empty		No Connection
M10	1	VTB3	EE8313		Corrector voltage tap Q3-B3 (normal sextupole)(on
M10	2	VTA4	EE8423		Corrector voltage tap Q3-A4 (skew octupole) (on
M10	3	VTB4	EE8413		Corrector voltage tap Q3-B4 (normal octupole) (on
M10	4	VTB6	EE8613		Corrector voltage tap Q3-B6 (normal dodecapole)
M10	5	Empty	Empty		No Connection
M11	1				Blank Module
M11	2				
M11	3				
M11	4				
M11	5				
M12	1	W1aQ1	EH8311+		Q1 Cryogenic Heater lead end - wire at top (CERN
M12	2	W2aQ1	EH8311-		Q1 Cryogenic Heater lead end - wire at bottom
M12	3	W1bQ1	EH8321+		Q1 Cryogenic Heater non-lead end - wire at top
M12	4	W2bQ1	EH8321-		Q1 Cryogenic Heater non-lead end - wire at bottom
M12	5	Empty	Empty		No Connection

Table 24.1 (continued)

Module	Pin	Fermilab Label	CERN Label	KEK Label	Description
M13	1	W1aQ2A	EH8312+		Q2A Cryogenic Heater lead end - wire toward cold mass end plate (CERN #1 I+)
M13	2	W2aQ2A	EH8312-		Q2A Cryogenic Heater lead end - wire toward cold mass mag center (CERN #1 I-)
M13	3	W1bQ2A	EH8322+		Q2A Cryogenic Heater non-lead end- wire toward cold mass end plate (CERN #2 I+)
M13	4	W2bQ2A	EH8322-		Q2A Cryogenic Heater non-lead end- wire toward cold mass mag center (CERN #2 I-)
M13	5	Empty	Empty		No connection
M14	1	W1aQ2B	EH8332+		Q2B Cryogenic Heater lead end - wire toward cold mass end plate (CERN #1 I+)
M14	2	W2aQ2B	EH8332-		Q2B Cryogenic Heater lead end - wire toward cold mass mag center (CERN #1 I-)
M14	3	W1bQ2B	EH8342+		Q2B Cryogenic Heater non-lead end- wire toward cold mass end plate (CERN #2 I+)
M14	4	W2bQ2B	EH8342-		Q2B Cryogenic Heater non-lead end- wire toward cold mass mag center (CERN #2 I-)
M14	5	Empty	Empty		No connection
M15	1	W1aQ3	EH8313+		Q3 Cryogenic Heater lead end - wire at top (CERN #1 I+)
M15	2	W2aQ3	EH8313-		Q3 Cryogenic Heater lead end - wire at bottom (CERN #1 I-)
M15	3	W1bQ3	EH8323+		Q3 Cryogenic Heater non-lead end - wire at top (CERN #2 I+)
M15	4	W2bQ3	EH8323-		Q3 Cryogenic Heater non-lead end - wire at bottom (CERN #2 I-)
M15	5	Empty	Empty		No Connection
M16	1				Blank Module
M16	2				
M16	3				
M16	4				
M16	5				
M17	1	H1aQ1	YT1111+	HA1	Q1 Protection (Strip) Heater, ("a" circuit) (CERN lead #1+)
M17	2	Empty	Empty		No connection
M17	3	H2aQ1	YT1111-	HA2	Q1 Protection (Strip) Heater, ("a" circuit) (CERN lead #1-)
M17	4	Empty	Empty		No connection
M17	5	H1bQ1	YT1121+	HB1	Q1 Protection (Strip) Heater, ("b" circuit) (CERN lead #2+)
M18	1	Empty	Empty		No connection
M18	2	H1aQ2a	YT1112+		Q2a Protection (Strip) Heater, 1-4 & 2-3 circuit (FNAL lead A+)
M18	3	Empty	Empty		No connection
M18	4	H2bQ1	YT1121-	HB2	Q1 Protection (Strip) Heater, ("b" circuit) (CERN lead #2-)
M18	5	Empty	Empty		No connection

LHC Serial No.: LMQXC07-0
Notes:

Table 24.1 (continued)

Module	Pin	Fermilab Label	CERN Label	KEK Label	Description
M19	1	H2aQ2a	YT1112-		Q2a Protection (Strip) Heater, 1-4 & 2-3 circuit (FNAL lead A-) (CERN lead #1-)
M19	2	Empty	Empty		No connection
M19	3	H1bQ2a	YT1122+		Q2a Protection (Strip) Heater, 1-2 & 3-4 circuit (FNAL lead B+) (CERN lead#2+)
M19	4	Empty	Empty		No connection
M19	5	H2bQ2a	YT1122-		Q2a Protection (Strip) Heater, 1-2 & 3-4 circuit (FNAL lead B-) (CERN lead #2-)
M20	1	Empty	Empty		No connection
M20	2	H2aQ2b	YT1132-		Q2b Protection (Strip) Heater, 1-4 & 2-3 circuit (FNAL lead A-) (CERN lead #1-)
M20	3	Empty	Empty		No connection
M20	4	H1aQ2b	YT1132+		Q2b Protection (Strip) Heater, 1-4 & 2-3 circuit (FNAL lead A+) (CERN lead #1+)
M20	5	Empty	Empty		No connection
M21	1	H1bQ2b	YT1142+		Q2b Protection (Strip) Heater, 1-2 & 3-4 circuit (FNAL lead B+) (CERN lead#2+)
M21	2	Empty	Empty		No connection
M21	3	H2bQ2b	YT1142-		Q2b Protection (Strip) Heater, 1-2 & 3-4 circuit (FNAL lead B-) (CERN lead #2-)
M21	4	Empty	Empty		No Connection
M21	5	H1aQ3	YT1113+	HA1	Q3 Protection (Strip) Heater, ("a" circuit) (CERN lead #1+)
M22	1	Empty	Empty		No Connection
M22	2	H1bQ3	YT1123+	HB1	Q3 Protection (Strip) Heater, ("b" circuit) (CERN lead #2+)
M22	3	Empty	Empty		No Connection
M22	4	H2aQ3	YT1113-	HA2	Q3 Protection (Strip) Heater, ("a" circuit) (CERN lead #1-)
M22	5	Empty	Empty		No Connection
M23	1	H2bQ3	YT1123-	HB2	Q3 Protection (Strip) Heater, ("b" circuit) (CERN lead #2-)
M23	2	Empty	Empty		No Connection
M23	3	Empty	Empty		No Connection
M23	4	Empty	Empty		No Connection
M23	5	Empty	Empty		No Connection

Module	Pin	Fermilab Label	CERN Label	KEK Label	Description
M24	1				Blank Module
M24	2				
M24	3				
M24	4				
M24	5				
Note: Pin Numbers of Module M25 are not listed in numerical order.					
M25	1	TaQ1_I+	TT8311 I+		Q1 RTD, primary Wire color: Yellow
M25	2	TaQ1_I-	TT8311 I-		Q1 RTD, primary Wire color: Green
M25	3	TaQ1_V+	TT8311 U+		Q1 RTD, primary Wire color: Black
M25	4	TaQ1_V-	TT8311 U-		Q1 RTD, primary Wire color: Red
M25	5	TbQ1_I+	TT8321 I+		Q1 RTD, redundant: Wire color: Yellow
M25	6	TbQ1_I-	TT8321 I-		Q1 RTD, redundant: Wire color: Green
M25	11	TbQ1_V+	TT8321 U+		Q1 RTD, redundant: Wire color: Black
M25	10	TbQ1_V-	TT8321 U-		Q1 RTD, redundant: Wire color: Red
M25	9	TaQ2a_I+	TT8312 I+		Q2a RTD, primary Wire color: Yellow
M25	8	TaQ2a_I-	TT8312 I-		Q2a RTD, primary Wire color: Green
M25	7	TaQ2a_V+	TT8312 U+		Q2a RTD, primary Wire color: Black
M25	12	TaQ2a_V-	TT8312 U-		Q2a RTD, primary Wire color: Red
M25	13	TbQ2a_I+	TT8322 I+		Q2a RTD, redundant: Wire color: Yellow
M25	14	TbQ2a_I-	TT8322 I-		Q2a RTD, redundant: Wire color: Green
M25	15	TbQ2a_V+	TT8322 U+		Q2a RTD, redundant: Wire color: Black
M25	16	TbQ2a_V-	TT8322 U-		Q2a RTD, redundant: Wire color: Red
M25	17	Empty	Empty		No connection
Note: Pin Numbers of Module M26 are not listed in numerical order.					
M26	1	TaQ2b_I+	TT8332 I+		Q2b RTD, primary Wire color: Yellow
M26	2	TaQ2b_I-	TT8332 I-		Q2b RTD, primary Wire color: Green
M26	3	TaQ2b_V+	TT8332 U+		Q2b RTD, primary Wire color: Black
M26	4	TaQ2b_V-	TT8332 U-		Q2b RTD, primary Wire color: Red
M26	5	TbQ2b_I+	TT8342 I+		Q2b RTD, redundant: Wire color: Yellow
M26	6	TbQ2b_I-	TT8342 I-		Q2b RTD, redundant: Wire color: Green
M26	11	TbQ2b_V+	TT8342 U+		Q2b RTD, redundant: Wire color: Black
M26	10	TbQ2b_V-	TT8342 U-		Q2b RTD, redundant: Wire color: Red
M26	9	TaQ3_I+	TT8313 I+		Q3 RTD, primary Wire color: Yellow
M26	8	TaQ3_I-	TT8313 I-		Q3 RTD, primary Wire color: Green
M26	7	TaQ3_V+	TT8313 U+		Q3 RTD, primary Wire color: Black
M26	12	TaQ3_V-	TT8313 U-		Q3 RTD, primary Wire color: Red
M26	13	TbQ3_I+	TT8323 I+		Q3 RTD, redundant: Wire color: Yellow
M26	14	TbQ3_I-	TT8323 I-		Q3 RTD, redundant: Wire color: Green
M26	15	TbQ3_V+	TT8323 U+		Q3 RTD, redundant: Wire color: Black
M26	16	TbQ3_V-	TT8323 U-		Q3 RTD, redundant: Wire color: Red
M26	17	Empty	Empty		No connection

Hypertronics Connector Pin Locations (Q3 non-IP end)
VIEW: Male (pin) solder cup side

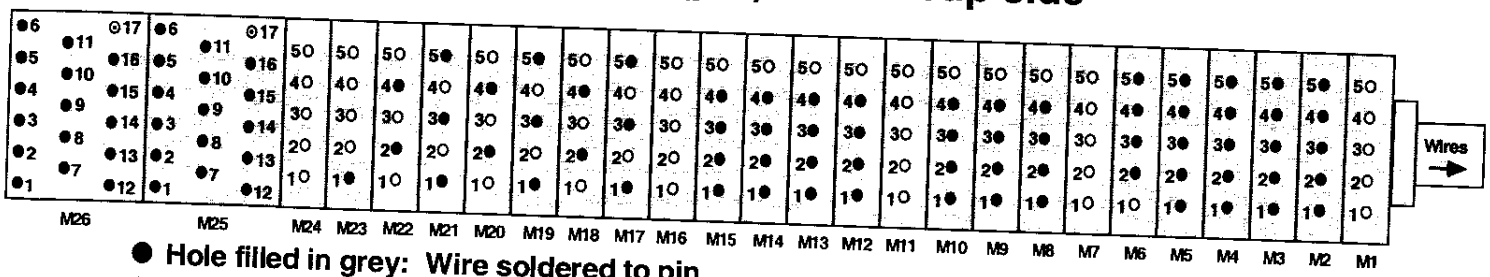

● Hole filled in grey: Wire soldered to pin.
⊙ Hole with dot in center: Pin exists but no wire soldered to it.
○ Hole filled in white: No pin. Hole is drilled out.

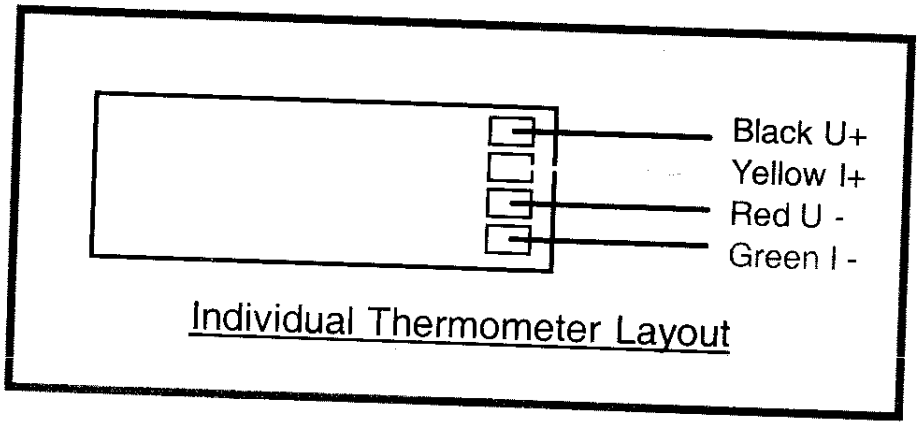

Note(s):

Ensure the Hypertronics cover has NOT been installed.

Technician(s) Eddy

Date 12/01/2005

24.2 Assemble/Install Hypertronics Connectors, **without Cover** at **IP End** as per Q3 Module Assembly (ME-369900). Pin Numbers for connectors are shown in Table 24.2 below.

Table 24.2

Module	Pin	Fermilab Label	CERN Label	KEK Label	Description
M1	1				Blank Module
M1	2				
M1	3				
M1	4				
M1	5				
M2	1	VTa1Q1	EE1111	a1	Q1 Lead Voltage Tap "a" , primary
M2	2	VTa2Q1	EE1121	a2	Q1 Lead Voltage Tap "a", redundant
M2	3	VTc1Q1	EE1211	c1	Q1 Center Voltage Tap "c", primary
M2	4	VTc2Q1	EE1221	c2	Q1 Center Voltage Tap "c", redundant
M2	5	VTb1Q1	EE1311	b1	Q1 Lead Voltage Tap "b", primary
M3	1	VTc1Q2a	EE1212		Q2a Center Voltage Tap "c", primary
M3	2	Empty	Empty		No connection
M3	3	VTa2Q2a	EE1122		Q2a lead Voltage Tap "a", redundant
M3	4	VTa1Q2a	EE1112		Q2a Lead Voltage Tap "a", primary
M3	5	VTb2Q1	EE1321	b2	Q1 Lead Voltage Tap "b", redundant
M4	1	VTc2Q2a	EE1222		Q2a Center Voltage Tap "c", redundant
M4	2	Empty	Empty		No connection
M4	3	VTb1Q2a	EE1312		Q2a Lead Voltage Tap "b", primary
M4	4	VTb2Q2a	EE1322		Q2a Lead Voltage Tap "b", redundant
M4	5	VTb1Q2b	EE1612		Q2b lead Voltage Tap "b", primary
M5	1	Empty	Empty		No connection
M5	2	VTc2Q2b	EE1522		Q2b Center Voltage Tap "c", redundant
M5	3	VTc1Q2b	EE1512		Q2b Center Voltage Tap "c", primary
M5	4	Empty	Empty		No connection
M5	5	VTb2Q2b	EE1622		Q2b Lead Voltage Tap "b" redundant
M6	1	VTa1Q2b	EE1412		Q2b Lead Voltage Tap "a", primary
M6	2	VTa2Q2b	EE1422		Q2b Lead Voltage Tap "a", redundant
M6	3	Empty	Empty		No connection
M6	4	Empty	Empty		No connection
M6	5	Empty	Empty		No connection
M7	1				Blank Module
M7	2				
M7	3				
M7	4				
M7	5				

Table 24.2 (continued)

Module	Pin	Fermilab Label	CERN Label	KEK Label	Description
M8	1	VTH1	EE8121		Corrector voltage tap Q1-H1 (skew dipole) (on MCBX, MCBXH, A+ lead)
M8	2	VTV1	EE8111		Corrector voltage tap Q1-V1 (normal dipole) (on MCBX, MCBXV A+ lead)
M8	3	VTH2	EE8122		Corrector voltage tap Q2-H2 (skew dipole) (on MCBX, MCBXH, A+ lead)
M8	4	VTV2	EE8112		Corrector voltage tap Q2-V2 (normal dipole) (on MCBX, MCBXV, A+ lead)
M8	5	Empty	Empty		No connection
M9	1				Blank Module
M9	2				
M9	3				
M9	4				
M9	5				
M10	1	W1aQ1	EH8311+		Q1 Cryogenic Heater lead end - wire at top (CERN #1 I+)
M10	2	W2aQ1	EH8311-		Q1 Cryogenic Heater lead end - wire at bottom (CERN #1 I-)
M10	3	W1bQ1	EH8321+		Q1 Cryogenic Heater non-lead end - wire at top (CERN #2 I+)
M10	4	W2bQ1	EH8321-		Q1 Cryogenic Heater non-lead end - wire at bottom (CERN #2 I-)
M10	5	Empty	Empty		No connection
M11	1	W1aQ2A	EH8312+		Q2A Cryogenic Heater lead end - wire toward cold mass end plate (CERN #1 I+)
M11	2	W2aQ2A	EH8312-		Q2A Cryogenic Heater lead end - wire toward cold mass mag center (CERN #1 I-)
M11	3	W1bQ2A	EH8322+		Q2A Cryogenic Heater non-lead end- wire toward cold mass end plate (CERN #2 I+)
M11	4	W2bQ2A	EH8322-		Q2A Cryogenic Heater non-lead end- wire toward cold mass mag center (CERN #2 I-)
M11	5	Empty	Empty		No connection
M12	1	W1aQ2B	EH8332+		Q2B Cryogenic Heater lead end - wire toward cold mass end plate (CERN #1 I+)
M12	2	W2aQ2B	EH8332-		Q2B Cryogenic Heater lead end - wire toward cold mass mag center (CERN #1 I-)
M12	3	W1bQ2B	EH8342+		Q2B Cryogenic Heater non-lead end- wire toward cold mass end plate (CERN #2 I+)
M12	4	W2bQ2B	EH8342-		Q2B Cryogenic Heater non-lead end- wire toward cold mass mag center (CERN #2 I-)
M12	5	Empty	Empty		No connection

Table 24.2 (continued)

Module	Pin	Fermilab Label	CERN Label	KEK Label	Description
M13	1				Blank Module
M13	2				
M13	3				
M13	4				
M13	5				
M14	1	H1aQ1	YT1111+	HA1	Q1 Protection (Strip) Heater, ("a" circuit) (CERN lead
M14	2	Empty	Empty		No connection
M14	3	H2aQ1	YT1111-	HA2	Q1Protection (Strip) Heater, ("a" circuit) (CERN lead #1-
M14	4	Empty	Empty		No connection
M14	5	H1bQ1	YT1121+	HB1	Q1 Protection (Strip) Heater, ("b" circuit) (CERN lead
M15	1	Empty	Empty		No connection
M15	2	H1aQ2a	YT1112+		Q2a Protection (Strip) Heater, 1-4 & 2-3 circuit (FNAL lead A+) (CERN lead #1+)
M15	3	Empty	Empty		No connection
M15	4	H2bQ1	YT1121-	HB2	Q1 Protection (Strip) Heater, ("b" circuit) (CERN lead
M15	5	Empty	Empty		No connection
M16	1	H2aQ2a	YT1112-		Q2a Protection (Strip) Heater, 1-4 & 2-3 circuit (FNAL lead A-) (CERN lead #1-)
M16	2	Empty	Empty		No connection
M16	3	H1bQ2a	YT1122+		Q2a Protection (Strip) Heater, 1-2 & 3-4 circuit (FNAL lead B+) (CERN lead#2+)
M16	4	Empty	Empty		No connection
M16	5	H2bQ2a	YT1122-		Q2a Protection (Strip) Heater, 1-2 & 3-4 circuit (FNAL lead B-) (CERN lead #2-)
M17	1	Empty	Empty		No connection
M17	2	H2aQ2b	YT1132-		Q2b Protection (Strip) Heater, 1-4 & 2-3 circuit (FNAL lead A-) (CERN lead #1-)
M17	3	Empty	Empty		No connection
M17	4	H1aQ2b	YT1132+		Q2b Protection (Strip) Heater, 1-4 & 2-3 circuit (FNAL lead A+) (CERN lead #1+)
M17	5	Empty	Empty		No connection
M18	1	H1bQ2b	YT1142+		Q2b Protection (Strip) Heater, 1-2 & 3-4 circuit (FNAL lead B+) (CERN lead#2+)
M18	2	Empty	Empty		No connection
M18	3	H2bQ2b	YT1142-		Q2b Protection (Strip) Heater, 1-2 & 3-4 circuit (FNAL lead B-) (CERN lead #2-)
M18	4	Empty	Empty		No connection
M18	5	Empty	Empty		No connection
M19	1				Blank Module
M19	2				
M19	3				
M19	4				
M19	5				

LHC Serial No.: LMQXC07-0
Notes:

Table 24.2 (continued)

Module	Pin	Fermilab Label	CERN Label	KEK Label	Description
NOTE: PIN NUMBERS OF MODULE M20 ARE NOT LISTED IN NUMERICAL ORDER.					
M20	1	TaQ1_I+	TT8311 I+		Q1 RTD, primary Wire color: Yellow
M20	2	TaQ1_I-	TT8311 I-		Q1 RTD, primary Wire color: Green
M20	3	TaQ1_V+	TT8311 U+		Q1 RTD, primary Wire color: Black
M20	4	TaQ1_V-	TT8311 U-		Q1 RTD, primary Wire color: Red
M20	5	TbQ1_I+	TT8321 I+		Q1 RTD, redundant: Wire color: Yellow
M20	6	TbQ1_I-	TT8321 I-		Q1 RTD, redundant: Wire color: Green
M20	11	TbQ1_V+	TT8321 U+		Q1 RTD, redundant: Wire color: Black
M20	10	TbQ1_V-	TT8321 U-		Q1 RTD, redundant: Wire color: Red
M20	9	TaQ2a_I+	TT8312 I+		Q2a RTD, primary Wire color: Yellow
M20	8	TaQ2a_I-	TT8312 I-		Q2a RTD, primary Wire color: Green
M20	7	TaQ2a_V+	TT8312 U+		Q2a RTD, primary Wire color: Black
M20	12	TaQ2a_V-	TT8312 U-		Q2a RTD, primary Wire color: Red
M20	13	TbQ2a_I+	TT8322 I+		Q2a RTD, redundant: Wire color: Yellow
M20	14	TbQ2a_I-	TT8322 I-		Q2a RTD, redundant: Wire color: Green
M20	15	TbQ2a_V+	TT8322 U+		Q2a RTD, redundant: Wire color: Black
M20	16	TbQ2a_V-	TT8322 U-		Q2a RTD, redundant: Wire color: Red
M20	17	Empty	Empty		No connection
NOTE: PIN NUMBERS OF MODULE M21 ARE NOT LISTED IN NUMERICAL ORDER.					
M21	1	TaQ2b_I+	TT8332 I+		Q2b RTD, primary Wire color: Yellow
M21	2	TaQ2b_I-	TT8332 I-		Q2b RTD, primary Wire color: Green
M21	3	TaQ2b_V+	TT8332 U+		Q2b RTD, primary Wire color: Black
M21	4	TaQ2b_V-	TT8332 U-		Q2b RTD, primary Wire color: Red
M21	5	TbQ2b_I+	TT8342 I+		Q2b RTD, redundant: Wire color: Yellow
M21	6	TbQ2b_I-	TT8342 I-		Q2b RTD, redundant: Wire color: Green
M21	11	TbQ2b_V+	TT8342 U+		Q2b RTD, redundant: Wire color: Black
M21	10	TbQ2b_V-	TT8342 U-		Q2b RTD, redundant: Wire color: Red
M21	9	Empty	Empty		No connection
M21	8	Empty	Empty		No connection
M21	7	Empty	Empty		No connection
M21	12	Empty	Empty		No connection
M21	13	Empty	Empty		No connection
M21	14	Empty	Empty		No connection
M21	15	Empty	Empty		No connection
M21	16	Empty	Empty		No connection
M21	17	Empty	Empty		No connection

Hypertronics Connector Pin Locations Q3 Lead (IP) End
VIEW: Female (receptacle) solder cup side

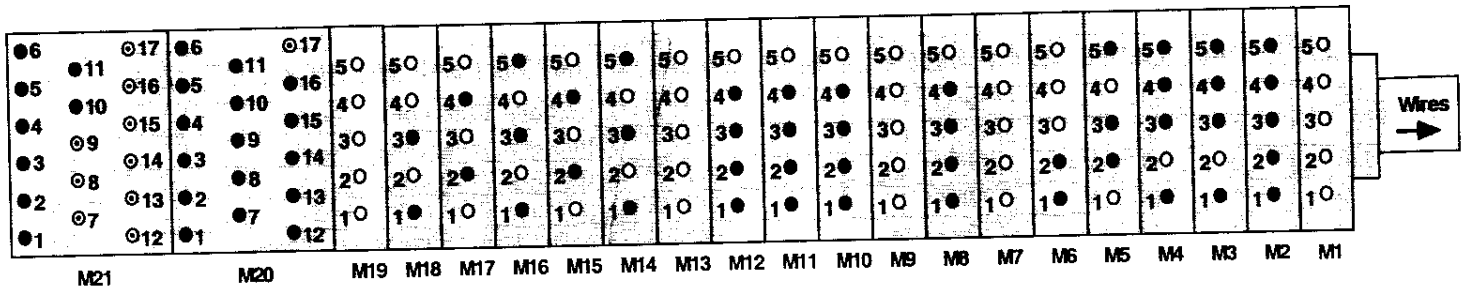

● Hole filled in grey: Wire soldered to pin.
⊙ Hole with dot in center: Pin exists but no wire soldered to it.
○ Hole filled in white: No pin. Hole is drilled out.

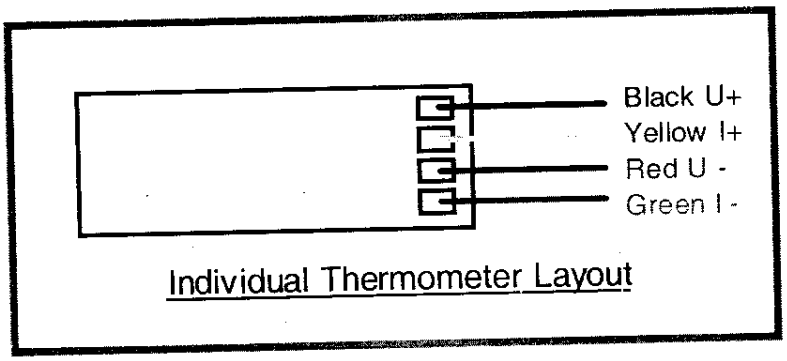

Note(s):

Ensure the Hypertronics cover has NOT been installed.

Technician(s) _____ Date 11/30/2005

24.3 Perform electrical inspections of the Hypertronics connectors:

#1 - Test of Q3 Fixed Voltage Taps

Apply 1A current between BUS #1 & BUS #2 on the Feed End (See Figure 24.3-A)

1. Clamp Bus #1 to Bus #2 on Return End.
2. Connect Current Source: BUS #1 to Positive and BUS #2 to Negative.

Use a 3457 or equivalent Digital Voltmeter and record measurement to four decimal places.
Use the Two-Wires Voltage Measurement Technique:

1. Connect Digital Voltmeter LO wire to BUS#2 (or Negative output of Power source).
2. HI wire of Digital Voltmeter will move through wires to measure V.

DO NOT USE DC CURRENT LARGER THAN 2A.
DO NOT APPLY CURRENT THROUGH MAGNET LONGER THAN 30MIN.

BUS #1
BUS #2
BUS #3
BUS #4

Power Bus Location Return End

BUS #1	BUS #2
BUS #3	BUS #4

Power Bus Location Feed End

Figure 24.3-A

HYPERTRONICS CONNECTOR		FNAL Labels	Description	Wire Labels	Expected Voltage,V	Measured
Module	Pin					
M5	2	VTa1Q3	Q3 Lead Voltage Tap "a", primary	EE1113	7.0000	6.9143 V
M5	1	VTa2Q3	Q3 Lead Voltage Tap "a", redundant	EE1123	7.0000	6.9139 V
M6	3	VTb1Q3	Q3 lead Voltage Tap "b", primary	EE1313	0.0030	10.892 mV
M6	4	VTb2Q3	Q3 Lead Voltage Tap "b" redundant	EE1323	0.0030	10.907 mV
M6	1	VTc1Q3	Q3 Center Voltage Tap "c", primary	EE1213	3.5000	3.4688 V
M6	2	VTc2Q3	Q3 Center Voltage Tap "c", redundant	EE1223	3.5000	3.4688 V
					Across BUS #1 and BUS #2:	6.919 V

Technician(s) Date 12/02/2005

#2 – Cryostat Heater Checkout

Measure resistance across each heater using a handheld meter.
Measure resistance from heater to ground using a handheld meter.

Module	Pin		Expected Resistance, OHM	Measured Resistance, OHM	FNAL Label	Description
M15	1	EH8313+	17	17.814 Ω	W1aQ3	Q3 Cryogenic Heater lead end - wire toward cold mass end plate (CERN #1 I+)
M15	2	EH8313-			W2aQ3	Q3 Cryogenic Heater lead end - wire toward cold mass mag center (CERN #1 I-)
M15	3	EH8323+	17	17.461 Ω	W1bQ3	Q3 Cryogenic Heater non-lead end- wire toward cold mass end plate (CERN #2 I+)
M15	4	EH8323-			W2bQ3	Q3 Cryogenic Heater non-lead end- wire toward cold mass mag center (CERN #2 I-)
M15	1	EH8313+	more than 20M Ω	∞	W1aQ3	Q3 Cryogenic Heater lead end - wire toward cold mass end plate (CERN #1 I+)
		GROUND				
M15	3	EH8323+	more than 20M Ω	∞	W1bQ3	Q3 Cryogenic Heater non-lead end- wire toward cold mass end plate (CERN #2 I+)
		GROUND				

Technician(s) D. Eddy

Date 12/02/2005

#3 – Test of Q3 Protection Strip Heaters

Measure resistance across each heater using a handheld meter.
Measure resistance from heater to ground using handheld meter.
Measure resistance from heater to coil using handheld meter.

Module	Pin	Breakout BOX Labels	Expected Resistance, OHM	Measured Resistance, OHM	FNAL Label	Description
M22	4	YT1113-	30	29.873 Ω	H2aQ1	Q1 Protection (Strip) Heater, 1-4 & 2-3 circuit (FNAL lead A-) (CERN lead #1-)
M21	5	YT1113+			H1aQ1	Q1 Protection (Strip) Heater, 1-4 & 2-3 circuit (FNAL lead A+) (CERN lead #1+)
M22	2	YT1123+	30	29.830 Ω	H1bQ3	Q3 Protection (Strip) Heater, 1-2 & 3-4 circuit (FNAL lead B+) (CERN lead#2+)
M23	1	YT1123-			H2bQ3	Q3 Protection (Strip) Heater, 1-2 & 3-4 circuit (FNAL lead B-) (CERN lead #2-)
M22	4	YT1113-	more than 20M Ω	∞	H2aQ3	Q3 Protection (Strip) Heater, 1-4 & 2-3 circuit (FNAL lead A-) (CERN lead #1-)
		GROUND				
M22	2	YT1123+	more than 20M Ω	∞	H1bQ3	Q3 Protection (Strip) Heater, 1-2 & 3-4 circuit (FNAL lead B+) (CERN lead#2+)
		GROUND				
M22	4	YT1113-	more than 20M Ω	∞	H2aQ3	Q3 Protection (Strip) Heater, 1-4 & 2-3 circuit (FNAL lead A-) (CERN lead #1-)
		COIL				
M22	2	YT1123+	more than 20M Ω	∞	H1bQ3	Q3 Protection (Strip) Heater, 1-2 & 3-4 circuit (FNAL lead B+) (CERN lead#2+)
		COIL				

Technician(s) D. Eddy

Date 12/02/2005

#4 – Test of Q3 RTD's

Measure resistance across each RTD using a four wire meter.
Measure resistance from RTD to ground using handheld meter.
Measure resistance from RTD to the coil using handheld meter.

Module	Pin	Breakout BOX Labels	Expected Resistance, OHM	Measured Resistance, OHM	FNAL Label	Description
M26	9	TT8313 I+	57	71.972 Ω	TaQ3_I+	Q3 RTD, primary Wire color: Yellow
M26	8	TT8313 I-			TaQ3_I-	Q3 RTD, primary Wire color: Green
M26	7	TT8313 U+			TaQ3_V+	Q3 RTD, primary Wire color: Black
M26	12	TT8313 U-			TaQ3_V-	Q3 RTD, primary Wire color: Red
M26	13	TT8323 I+	57	65.275 Ω	TbQ3_I+	Q3 RTD, redundant: Wire color: Yellow
M26	14	TT8323 I-			TbQ3_I-	Q3 RTD, redundant: Wire color: Green
M26	15	TT8323 U+			TbQ3_V+	Q3 RTD, redundant: Wire color: Black
M26	16	TT8323 U-			TbQ3_V-	Q3 RTD, redundant: Wire color: Red
M26	9	TT8313 I+	more than 20M Ω	∞	TaQ3_I+	Q3 RTD, primary Wire color: Yellow
		GROUND				
M26	9	TT8323 I+	more than 20M Ω	∞	TbQ3_I+	Q3 RTD, redundant: Wire color: Yellow
		GROUND				
M26	9	TT8313 I+	more than 20M Ω	∞	TaQ3_I+	Q3 RTD, primary Wire color: Yellow
		COIL				
M26	9	TT8323 I+	more than 20M Ω	∞	TbQ3_I+	Q3 RTD, redundant: Wire color: Yellow
		COIL				

Eddy
Technician(s)

12/02/2005
Date

#5 – Test of Q3 Correction Coils

Correction Coil Bus Number →	3	4	1	2	7	8	5	6	
	V3A	V3B	H3A	H3B	B3A	B3B	B6A	B6B	
	V2A	V2B	H2A	H2B	B4A	B4B	A4A	A4B	
	V1A	V1B	H1A	H1B	A2A	A2B	A3A	A3B	

Measure resistance across both Correction Coil buses.

Measure resistance from Correction Coil to ground.

Measure resistance between taps.

Measure resistance from each tap to Correction Coil bus.

Measure continuity of Q1 Correction Coil bus.

Measure for short between Q1 Correction Coil bus and Ground.

Measure continuity of Q2 Correction Coil bus.

Measure for short between Q2 Correction Coil bus and Ground.

Horizontal Corrector Coil		Expected	Measured
H3-A	CCOIL BUS #1	23 Ω	21.74 Ω
H3-B	CCOIL BUS #2		
Vertical Corrector Coil		**Expected**	**Measured**
V3-A	CCOIL BUS #3	19 Ω	17.79 Ω
V3-B	CCOIL BUS #4		
A2 Corrector Coil		**Expected**	**Measured**
A2-A	CCOIL BUS #7	10 Ω	8.10 Ω
A2-B	CCOIL BUS #8		
H3-A	CCOIL BUS #1	> 20K Ω	∞
	GROUND		
V3-A	CCOIL BUS #3	> 20K Ω	∞
	GROUND		
A2-A	CCOIL BUS #7	> 20K Ω	∞
	GROUND		
A3 Corrector Coil resistance		**Expected**	**Measured**
A3-A	CCOIL BUS #5	14 Ω	13.57 Ω
A3-B	CCOIL BUS #6		
B3 Corrector Coil resistance		**Expected**	**Measured**
B3-A	CCOIL BUS #7	28 Ω	28.30 Ω
B3-B	CCOIL BUS #8		

A4 Corrector Coil resistance		Expected	Measured
A4-A	CCOIL BUS #5	12 Ω	12.23 Ω
A4-B	CCOIL BUS #6		
A3-A	CCOIL BUS #1	> 20K Ω	∞
	GND		
B3-A	CCOIL BUS #3	> 20K Ω	∞
	GND		
A4-A	CCOIL BUS #7	> 20K Ω	∞
	GND		
B4 Corrector Coil resistance		**Expected**	**Measured**
B4-A	CCOIL BUS #7	13 Ω	13.21 Ω
B4-B	CCOIL BUS #8		
B6 Corrector Coil resistance		**Expected**	**Measured**
B6-A	CCOIL BUS #5	100 Ω	98.91 Ω
B6-B	CCOIL BUS #6		
B4-A	CCOIL BUS #1	>20K Ω	∞
	GND		
B6-A	CCOIL BUS #3	>20K Ω	∞
	GND		

	Expected	Measured
EE8123 / EE8113	> 20M Ω	∞
EE8123 / EE8223	> 20M Ω	∞
EE8123 / EE8323	> 20M Ω	∞
EE8123 / EE8313	> 20M Ω	∞
EE8123 / EE8423	> 20M Ω	∞
EE8123 / EE8413	> 20M Ω	∞

	Expected	Measured
EE8123 / EE8413	> 20M Ω	∞
EE8123 / EE8613	> 20M Ω	∞
EE8113 / EE8223	> 20M Ω	∞
EE8113 / EE8323	> 20M Ω	∞
EE8113 / EE8323	> 20M Ω	∞
EE8113 / EE8313	> 20M Ω	∞

	Expected	Measured
EE8113 / EE8423	> 20M Ω	∞
EE8113 / EE8413	> 20M Ω	∞
EE8113 / EE8613	> 20M Ω	∞
EE8223 / EE8323	> 20M Ω	∞
EE8223 / EE8313	> 20M Ω	∞

	Expected	Measured
EE8223 / EE8613	> 20M Ω	∞
EE8323 / EE8313	> 20M Ω	∞
EE8323 / EE8423	> 20M Ω	∞
EE8323 / EE8413	> 20M Ω	∞
EE8323 / EE8613	> 20M Ω	∞

	Expected	Measured
EE8223 / EE8423	>20M Ω	∞
EE8223 / EE8413	>20M Ω	∞
EE8313 / EE8613	>20M Ω	∞
EE8423 / EE8413	>20M Ω	∞

	Expected	Measured
EE8313 / EE8423	>20M Ω	∞
EE8313 / EE8413	>20M Ω	∞
EE8423 / EE8613	>20M Ω	∞
EE8413 / EE8613	>20M Ω	∞

Measure voltage tap to each Correction Coil

	Expected	Measured
H3A EE8123	<5 Ω	1.04 Ω
V3A EE8113	<5 Ω	1.25 Ω
B6A EE8613	<5 Ω	1.08 Ω
B3A EE8313	<5 Ω	1.13 Ω
A4A EE8423	<5 Ω	1.08 Ω
B4A EE8413	<5 Ω	1.30 Ω
A3A EE8323	<5 Ω	1.13 Ω
A2A EE8223	<5 Ω	2.00 Ω

	Expected	Measured
H3B EE8123	24 Ω	22.39 Ω
V3B EE8113	19 Ω	18.66 Ω
B6B EE8613	100 Ω	99.52 Ω
B3B EE8313	29 Ω	29.06 Ω
A4B EE8423	12 Ω	12.95 Ω
B4B EE8413	13 Ω	14.09 Ω
A3B EE8323	13 Ω	14.36 Ω
A2B EE8223	10 Ω	9.58 Ω

Measure continuity of Q1 Correction Coil through bus. (Yes or No)

Correction Coil	Bus	Continuity?
V1A	3	YES
V1B	4	YES
H1A	1	YES
H1B	2	YES

Measure Correction Coil through bus of Q1 to Ground. (Yes or No)

Correction Coil	Bus	Continuity?
V1A	3	No
V1B	4	No
H1A	1	No
H1B	2	No

Measure continuity of Q2 Correction Coil through bus. (Yes or No)

Correction Coil	Bus	Continuity?
V2A	3	YES
V2B	4	YES
H2A	1	YES
H2B	2	YES

Measure Correction Coil through bus of Q2 to Ground. (Yes or No)

Correction Coil	Bus	Continuity?
V2A	3	No
V2B	4	No
H2A	1	No
H2B	2	No

Technician(s) _____ Date 12/02/2005

#6 – Test of Q3 Feed Through

Measure resistance between all 24 - Q1 feed through signals.

Q1		
	EXPECTED Ω	OK?
EE1111	< 1 Ω	✓
EE1121	< 1 Ω	✓
EE1211	< 1 Ω	✓
EE1221	< 1 Ω	✓
EE1311	< 1 Ω	✓
EE1321	< 1 Ω	✓
EE8121	< 1 Ω	✓
EE8111	< 1 Ω	✓
EH8311+	< 1 Ω	✓
EH8311-	< 1 Ω	✓
EH8321+	< 1 Ω	✓
EH8321-	< 1 Ω	✓
YT1111+	< 1 Ω	✓
YT1111-	< 1 Ω	✓
YT1121+	< 1 Ω	✓
YT1121-	< 1 Ω	✓
TT8311I+	< 1 Ω	✓
TT8311I-	< 1 Ω	✓
TT8311U+	< 1 Ω	✓
TT8311U-	< 1 Ω	✓
TT8321I+	< 1 Ω	✓
TT8321I-	< 1 Ω	✓
TT8321U+	< 1 Ω	✓
TT8321U-	< 1 Ω	✓

Measure resistance between all 46 - Q2 feed through signals.

Q2		
	EXPECTED Ω	OK?
EE1112	< 1 Ω	✓
EE1122	< 1 Ω	✓
EE1212	< 1 Ω	✓
EE1222	< 1 Ω	✓
EE1312	< 1 Ω	✓
EE1322	< 1 Ω	✓
EE8122	< 1 Ω	✓
EE8112	< 1 Ω	✓
EH8312+	< 1 Ω	✓
EH8312-	< 1 Ω	✓
EH8322+	< 1 Ω	✓
EH8322-	< 1 Ω	✓
YT1112+	< 1 Ω	✓
YT1112-	< 1 Ω	✓
YT1122+	< 1 Ω	✓
YT1122-	< 1 Ω	✓
TT8312I+	< 1 Ω	✓
TT8312I-	< 1 Ω	✓
TT8312U+	< 1 Ω	✓
TT8312U-	< 1 Ω	✓
TT8322I+	< 1 Ω	✓
TT8322I-	< 1 Ω	✓
TT8322U+	< 1 Ω	✓

Q2		
	EXPECTED Ω	OK?
TT8322U-	< 1 Ω	✓
EE1412	< 1 Ω	✓
EE1422	< 1 Ω	✓
EE1512	< 1 Ω	✓
EE1522	< 1 Ω	✓
EE1612	< 1 Ω	✓
EE1622	< 1 Ω	✓
EH8332+	< 1 Ω	✓
EH8332-	< 1 Ω	✓
EH8342+	< 1 Ω	✓
EH8342-	< 1 Ω	✓
YT1132+	< 1 Ω	✓
YT1132-	< 1 Ω	✓
YT1142+	< 1 Ω	✓
YT1142-	< 1 Ω	✓
TT8332I+	< 1 Ω	✓
TT8332I-	< 1 Ω	✓
TT8332U+	< 1 Ω	✓
TT8332U-	< 1 Ω	✓
TT8342I+	< 1 Ω	✓
TT8342I-	< 1 Ω	✓
TT8342U+	< 1 Ω	✓
TT8342U-	< 1 Ω	✓

Technician(s) _____ Date 12/02/2005

STOP

24.4 Inspect Hypertronics Connector. Ensure that it is free of flux and that Kapton has been installed properly.

Responsible Authority/Physicist _____ Date 7-DEC-2005

24.5 After LHC Project Physicist / designee has signed the above step, complete the installation of the Hypertronics.

Technician(s) _____ Date 12/2/05

25.0 Final Electrical Inspection

25.1 Perform an electrical inspection on each of the Individual Quadrants and the Cold Mass. Refer to the Valhalla and Leader Free Standing Coil Measurement Procedure (ES-292306).

To measure the Resistance of a Q3 Cold Mass:

1. Use Valhalla Scientific 4300B digital micro-ohmmeter.
2. Set Test Current to 0.1 amp.
3. Set Scale to 2V full scale.
4. Turn temperature compensation on.
5. Turn test current off.
6. Connect I_{HI} to "A" Lead as shown in figure 25.1-A.
7. Connect I_{LO} to "B" Lead as shown in figure 25.1-A.
8. Turn test current on.
9. Connect V_{HI} and V_{LO} to voltage taps as shown in resistance table.
10. To measure Total with leads, connect V_{HI} to "A" Lead and V_{LO} to "B" Lead.
11. At the IP End, jumper the 8Ka leads as shown in Figure 25.1-A.
12. Read resistance and record in traveler.

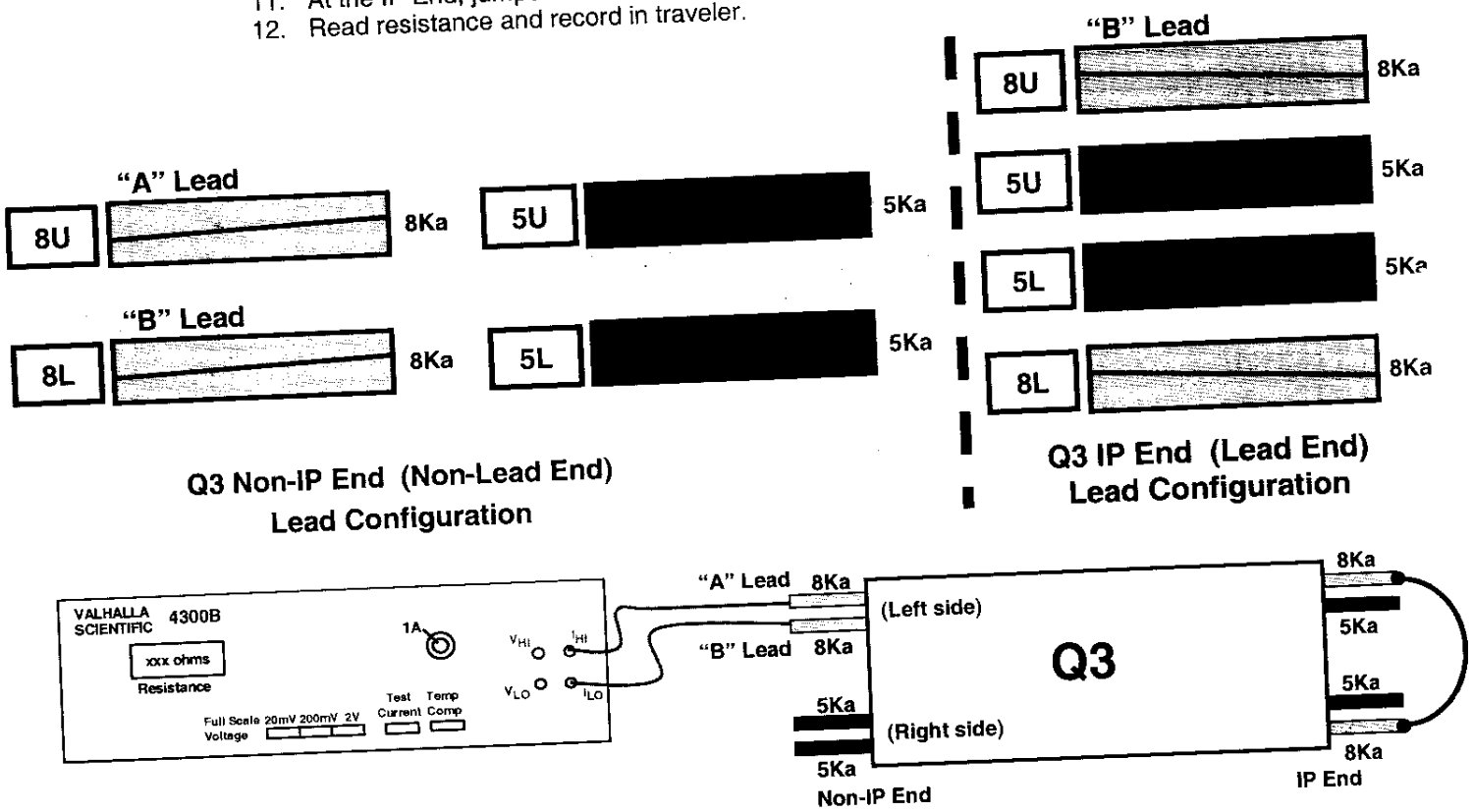

Figure 25.1-A

(Q3) Resistance				Nominal 3.35 to 3.45 Ω
Voltage Tap Serial Numbers				Total Resistance
Connect	Fermi	CERN	KEK	
V_{HI}	VTa1Q3	EE1113	a1	3.408 Ω
V_{LO}	VTc1Q3	EE1213	c1	
V_{HI}	VTc1Q3	EE1213	c1	3.421 Ω
V_{LO}	VTb1Q3	EE1313	b1	

				Total Resistance with Leads
				Nominal 6.75 to 6.85 Ω
V_{HI}	VTa1Q3	EE1113	a1	6.828 Ω
V_{LO}	VTb1Q3	EE1313	b1	
V_{HI}	Q4 Power Lead			6.845 Ω
V_{LO}	Q3 Power Lead			

Technician(s) 12-9-05 Date

Check resistance of Redundant Voltage Taps.

Q3 Redundant Voltage Taps				Nominal 3.35 to 3.45 Ω
Connect	Fermi	CERN	KEK	Resistance
V_{HI}	VTa2Q3	EE1123	a2	3.408 Ω
V_{LO}	VTc2Q3	EE1223	c2	
V_{HI}	VTc2Q3	EE1223	c2	3.421 Ω
V_{LO}	VTb2Q3	EE1323	b2	

Technician(s) 12-9-05 Date

To measure Ls and Q of a Q3 Cold Mass:

1. Use Agilent 4263B LCR Meter.
2. Turn power on by pushing line button. Wait 30 seconds until display screen is lit.
3. Recall program #1. To do this, push recall (Rcl), then push #1, then push Enter.
4. Push Auto/Hold button to release hold.
5. Verify that the frequency displayed in the upper right corner of the display screen is 1000 Hz and the level recorded in the lower right corner of the display screen is 1V or 1000 mV.
6. Connect H_{cur} to "A" power lead as shown in figure 25.1-B
7. Connect L_{cur} to "B" power lead as shown in figure 25.1-B.
8. Connect H_{pot} and L_{pot} buttons to voltage taps as shown below.
9. Read Ls and Q from display and record in table.

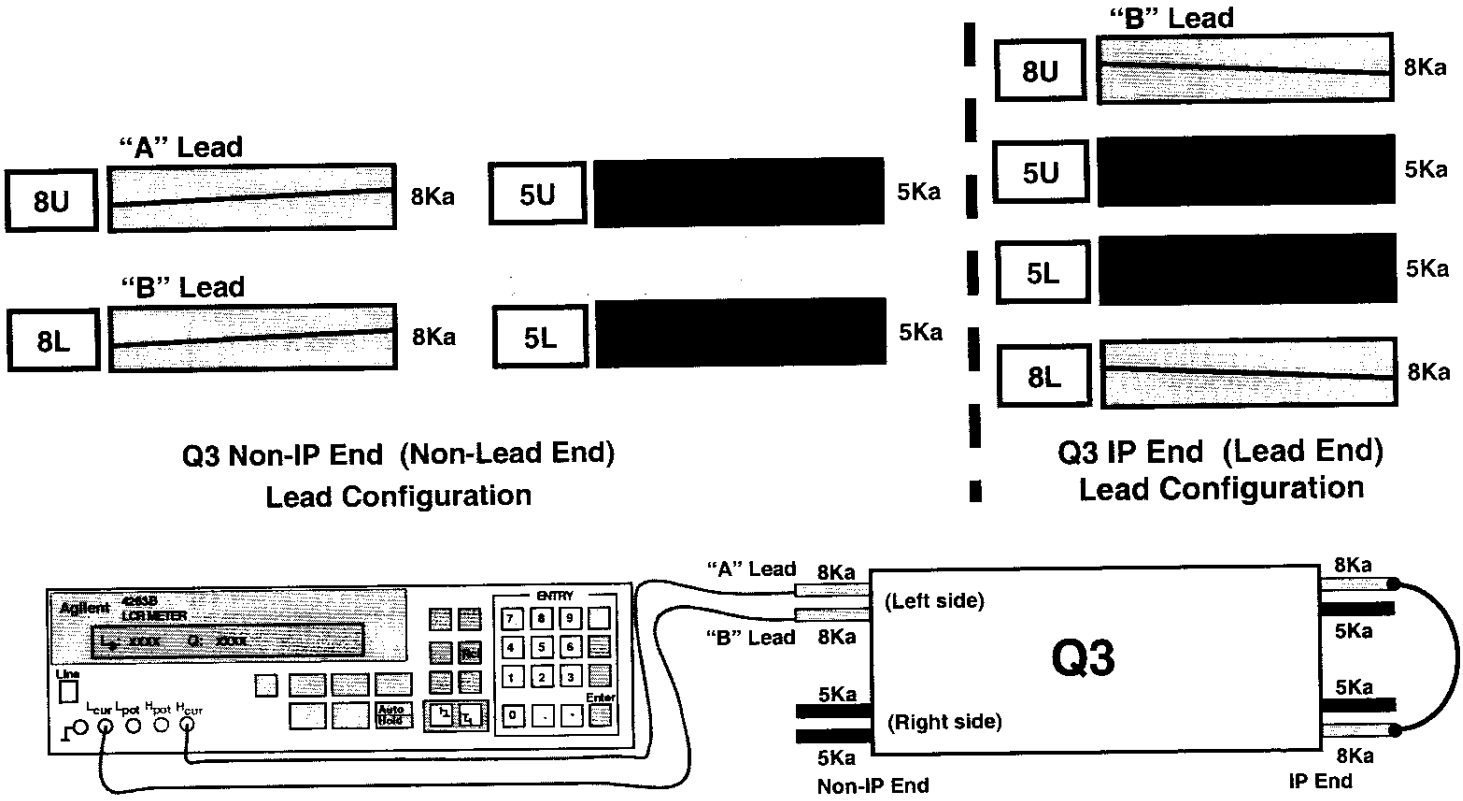

Figure 25.1-B

(Q3) Inductance				Nominal 15 to 16 mH
Voltage Tap Serial Numbers				Total Inductance
Connect	Fermi	CERN	KEK	
H_{POT}	VTa1Q3	EE1113	a1	15.239 mH
L_{POT}	VTc1Q3	EE1213	c1	
H_{POT}	VTc1Q3	EE1213	c1	15.233 mH
L_{POT}	VTb1Q3	EE1313	b1	

				Nominal 30 to 32 mH
				Total Inductance
H_{POT}	VTa1Q3	EE1113	a1	30.43 mH
L_{POT}	VTb1Q3	EE1313	b1	
H_{POT}	Q4 Power Lead			30.47 mH
L_{POT}	Q3 Power Lead			

(Q3) Q-Factor				Nominal 1.0 to 1.2
Voltage Tap Serial Numbers				Total Q
Connect	Fermi	CERN	KEK	
H_{POT}	VTa1Q3	EE1113	a1	1.1
L_{POT}	VTc1Q3	EE1213	c1	
H_{POT}	VTc1Q3	EE1213	c1	1.1
L_{POT}	VTb1Q3	EE1313	b1	

				Nominal 1.0 to 1.2
				Total Q
H_{POT}	VTa1Q3	EE1113	a1	1.1
L_{POT}	VTb1Q3	EE1313	b1	
H_{POT}	Q4 Power Lead			1.1
L_{POT}	Q3 Power Lead			

Technician(s)

12-9-05
Date

To measure the resistance of a Thermometer (RTD):

1. Use Hewlett Packard HP3457A digital multimeter.
2. Record temperature of building within +/- 5 degrees.
3. Press line button to turn line on.
4. Connect wires as shown in Figure below.
   U+ (Black) to Sense HI
   I+ (Yellow) to Input HI
   U- (Red) to Sense LO
   I- (Green) to Input LO
5. Push blue button (function key) once.
6. Push OHMF button.
7. Verify arrow in readout is above the 4WΩ (meaning a 4 wire resistance measurement).
8. Read resistance in ohms and record in traveler.

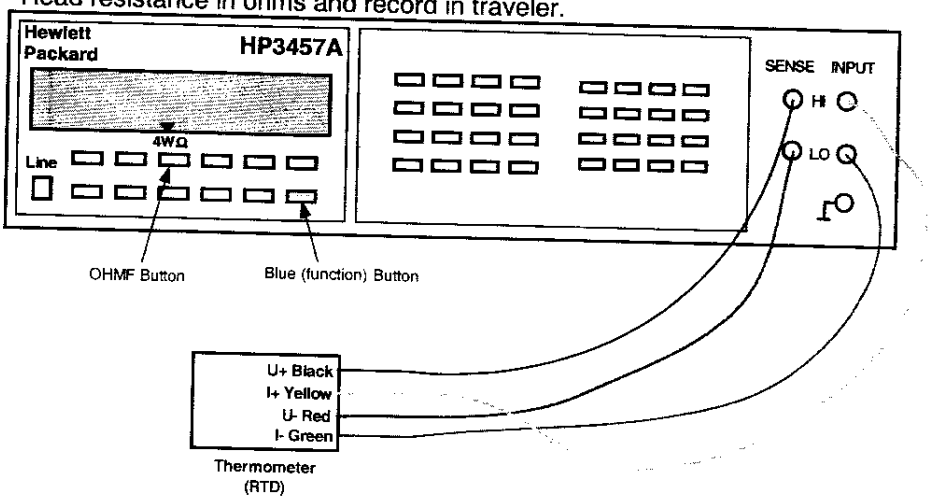

To measure the resistance of a Cryogenic (Warm-up) Heater

1. Use Hewlett Packard HP3457A digital multimeter.
2. Record temperature of building within +/- 5 degrees.
3. Press line button to turn line on.
4. Connect wires as shown in Figure below.
5. Push blue button (function key) once.
6. Push OHMF button.
7. Verify arrow in readout is above the 4WΩ (meaning a 4 wire resistance measurement).
   Note: Although this is technically a 4 wire measurement, it is effectively a 2 wire measurement, since there are only 2 wires connected to each heater.
8. Read resistance in ohms and record in traveler.

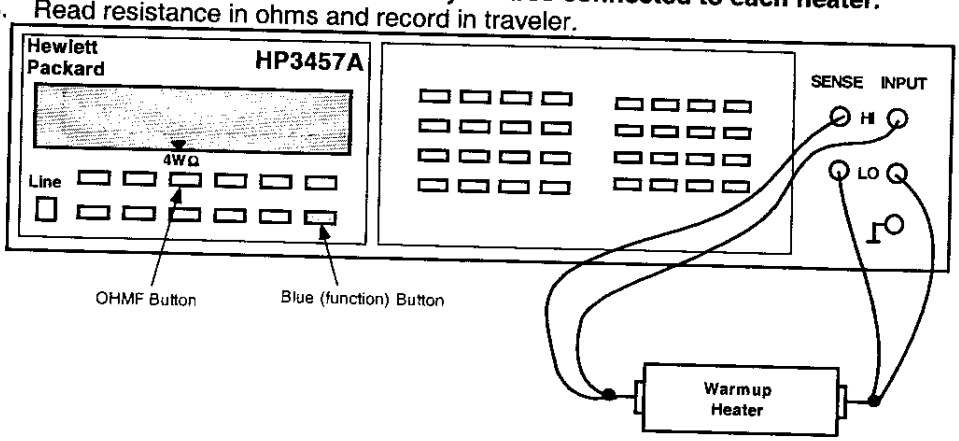

25.2 Hipot according to table below. Hipot to 3kV. Maximum leakage is 3μA.

STOP

Have Crew Chief verify setup and sign below before continuing.

Crew Chief _____ Date 12-9-05

Hipot Heaters to Coil and Ground.

High Potential	Grounded	Floating	Leakage
All Strip Heaters	Coils, Yoke, Q3 Instrumentation Bus, Lead and Corrector Coil Busses, RTD's and Warm-up Heaters	Nothing	248 nA

Hipot Coil to Heaters and Ground.

High Potential	Grounded	Floating	Leakage
All Coils	Strip Heaters, Yoke, Q3 Instrumentation Bus, 8kA and 5kA Lead Busses and Corrector Coil Busses, RTD's and Warm-up Heaters	Nothing	.902 μA

Technician(s) _____ Date 12/9/05

STOP

25.3 Ensure electrical measurements are acceptable and confirm Hypertronics Connector has been installed properly.

Responsible Authority/Physicist _____ Date 12/9/05

26.0 Production Complete

26.1 Process Engineering verify that the Q3 Cold Mass Module Assembly Traveler (5520-TR-333729) is accurate and complete. This shall include a review of all steps to ensure that all operations have been completed and signed off. Ensure that all Discrepancy Reports, Nonconformance Reports, Repair/Rework Forms, Deviation Index and dispositions have been reviewed by the Responsible Authority for conformance before being approved.

Comments:

Process Engineer/Designee

6/27/06
Date

TD - Engineering Fabr tion Component Kit List

ORIGINA

RECEIVED
JUN 28 2005
MATERIAL CONTROL / IB4

Process Engineering

Component Serial No.: LMQXC07
Kit submitted by: John Szostak | Ext. 2003
Fermi ID No.: 02943C
Date submitted: 27-Jun-05
Need date: 30-Jun-05
Deliver to: ICB
Use with Traveler No.: 333729
Job No.: 248
M&S task number: 300 | 1.1.1.3.4
Drawing Title: Q3 MODULE ASSEMBLY
Drawing No.: ME-369900 | Rev. C
Drawing Title: Q3 COLD MASS WELDED ASSEMBLY
Drawing No.: ME-390529 | Rev. E

Material Control

Parts available

Verified by: M. Schmidt MS
Fermi ID No.: 04223N
Date submitted to stockroom:

Parts issued

Issued by: P. MATHER
Fermi ID No.: 12792
Date issued: 7/5/05
Parts received by E&F: J. Szostak
Fermi ID No.: 02943C
Date received by E&F: 7/5/05

	Description	Dwg Size	Number	Rev	Unit	Quantity Required	Location	Quantity Issued	E&F Verified	Routing Form Number	Spares Number / Comment
1	26 GA. POLYIMIDE COATED WIRE (FOR VOLTAGE TAPS)	MA	369832	*	EA	8	ICB HAS				
2	20 GA. POLYIMIDE COATED WIRE (FOR STRIP HTRS & WARMUP HTRS)	MA	369833	*	EA	6	ICB HAS				
3	WARM-UP HEATER	MA	369834	A	EA	2	IB4 Bin	2		79919	55 pcs.
4	RTD ASSEMBLY	MA	369835	A	EA	2	R2,S2,L5	2		79920	9 pcs.
5	30 GA. POLYMIDE COATED CABLE (FOR RTD WIRE EXTENSIONS)	MA	369836	*	-	A / R					
6	RTD MOUNTING BLOCK	MB	369893	B	EA	2	IB4 Bin	2		80543	9 pcs.
7	.010" SOLDER STRIP	MA	369904	*	m	1	ICB HAS				
8	KESTER 135 FLUX	MA	369911	*		A / R					
9	KEVLAR YARN	MA	369912	*	-	A / R					
10	SHCS #4-40 x 1/4" LG. S.S.	MA	369938	*	EA	4	IB4 Bin	4		79032	80 pcs.
11	WARM-UP HEATER BASE PLATE	MA	369997	A	EA	2	IB4 Bin	2		80096	6 pcs.

ORIGINAL

TD - Engineering Fabri ion Component Kit List

ORIGINAL

	Description	Dwg Size	Number	Rev	Unit	Quantity Required	Location	Quantity Issued	E&F Verified	Routing Form Number	Spares Number / Comment
12	SHCS M8 x 1.25 x 50mm LG S.S.	MA	393020	*	EA	1	IB4 Bin	1		82378	73 pcs.
13	SHCS #6-32 UNC x 1 LG S.S.	MA	393082	*	EA	4	IB4 Bin	4		81360	60 pcs.
14	NUT, HEX #6-32 UNC S.S.	MA	393089	*	EA	4	IB4 Bin	4		82594	128 pcs.
15	FHSCS M8 x 18mm LG S.S.	MA	393175	*	EA	2	IB4 Bin	2		82114	88 pcs.
16	#10-32 x 5/8" LONG SHCS - S.S.	MA	393176	*	EA	2	IB4 Bin	2		82115	92 pcs.
17	RTD SCREWS	MA	393180	*	EA	4	IB4 Bin	4		79631	571 pcs.
18	RTD WASHERS	MA	393181	*	EA	4	IB4 Bin	4		82959	84 pcs.
19	SHCS, 5/16-18 UNC x 1 1/4 LG S.S. (FOR SPLICE HOUSING)	MA	393263	*	EA	8	IB4 Bin	8		83268	96 pcs.
20	SCREW, FLAT HEAD SOCKET M12 x 1.75 x 20mm LG S.S.	MA	393291	*	EA	2	IB4 Bin	2		80694	70 pcs.
21	HHCS M4 x .7 x 20mm LG S.S.	MA	393404	*	EA	4	R1,2,2	4		82279	138 pcs.
22	FHSCS 1/4-28 UNF x 1/2 LG S.S.	MA	393405	*	EA	4	R1,2,2	4		82445	134 pcs.
23	SHCS M8 x 1.25 x 40mm LG S.S.	MA	393409	*	EA	1	IB4 Bin	1		82393	97 pcs.
24	SHCS 1/4-20 UNC x 1.00 LG S.S.	MA	393422	*	EA	4	R1,2,2	4		82395	88 pcs.
25	SHCS, 5/16-18 UNC-2A x 1.00 LG S.S.	MA	393431	*	EA	2	IB4 Bin	2		82757	44 pcs.
26	SHCS, M6 x 20mm LG S.S.	MA	393444	*	EA	4	IB4 Bin	4		82758	88 pcs.
27	IP (LEAD) END BUS SPLICE CLAMP ASSEMBLY / Q3	MD	430031	B	EA	1	R1,3,2	1		81915	4 pcs.
28	NOMEX STRIP - .010" THICK	MB	430064	*		ICB HAS					
29	FACE PLATE FOR MCBXA CORRECTOR LEADS	MD	430083	A	EA	1	R1,3,3	1		82368	3 pcs.
30	CORRECTOR WIRE CHANNEL BLOCK	MB	430091	*	EA	2	R2,2,2	2		82010	APR *
31	CORRECTOR WIRE SPLICE CLAMP COVER	MB	430092	*	EA	2	R2,2,3	1		82011	APR *

PK0278

Serial No. LMQXC07

TD - Engineering Fabri ‘ion Component Kit List

ORIGINA'

	Description	Dwg Size	Number	Rev	Unit	Quantity Required	Location	Quantity Issued	E&F Verified	Routing Form Number	Spares Number / Comment
32	CENTER CABLE INSULATOR - BOTTOM	MC	430110	*	EA	1	R2,2,2	1	[illegible]	82013	12 pcs.
33	MCSOX SPLICE PLATE MOUNTING BAR	MC	430128	A	EA	2	R2,2,3	2	[illegible]	82318	6 pcs.
34	MCSOX SPLICE PLATE MOUNTING RING	MC	430129	*	EA	1	R2,2,3	1	[illegible]	82144	3 pcs.
35	MCSOX CORRECTOR SPLICE FACE PLATE	MD	430130	C	EA	1	R1,1,2	1	[illegible]	82521	2 pcs.
36	NON-IP (LEAD END) CORRECTOR BUS BUNDLE BRACKET	MC	430134	A	EA	1	R2,2,3	1	[illegible]	81942	5 pcs.
37	CORRECTOR COIL FACE PLATE CLAMP	MB	430135	*	EA	1	R2,2,3	1	[illegible]	81967	4 pcs.
38	HARNESS BLOCK	MB	430144	*	EA	2	IB4 Bin	2	[illegible]	82152	8 pcs.
39	INSULATED EXPANSION LOOP TAIL	MB	430145	*	EA	1	ICB HAS				ICB techs to make
40	VOLTAGE TAPS SPLICE BLOCK	MC	430146	*	EA	1	R1,1,3	1	[illegible]	82314	5 pcs.
41	Q3 LE UPPER SUSPENSION BRACKET WELDMENT	MC	430159	A	EA	1	R1,3,2	1	[illegible]	82448	5 pcs.
42	Q3 LE LOWER SUSPENSION BRACKET WELDMENT	MD	430160	A	EA	1	R1,3,2	1	[illegible]	82449	5 pcs.
43	SIDE CABLE CLAMP ASSEMBLY	MC	430103		EA	2	R1,3,3	2	[illegible]	82012	8 pcs.
44	CORRECTOR EXPANSION LOOP BUS CLAMP	MB	430168	*	EA	2	R1,1,3	2	[illegible]	82626	10 pcs.
45	CONNECTOR, PANDUIT CRIMP SPLICE TYPE 16-22 WIRE GAUGE	FERMI STOCK	#1110-0550	*	EA	10	ICB HAS				
46	TAPE, ELECTRICAL, GLASS CLOTH "3M SCOTCH #27" 1/2"	FERMI STOCK	#1130-2050	*		A / R					
47	MQSX CORRECTOR MAGNET	CERN	SUPPLIED	*		ICB HAS					
48	MCSOX CORRECTOR MAGNET	CERN	SUPPLIED	*		ICB HAS					
49	MQSXA CORRECTOR MAGNET	CERN	SUPPLIED	*		ICB HAS					
50	NON-IP END BUS CROSSOVER BLOCK ASSEMBLY	MD	430081	A	EA	1	R1,2,5	1	[illegible]	82624	5 pcs.
51	IP END BUS CROSSOVER BLOCK ASSEMBLY	MD	430095	B	EA	1	R8,S2,L4	1	[illegible]	82625	6 pcs.

TD - Engineering Fabri ion Component Kit List

ORIGINAL

	Description	Dwg Size	Number	Rev	Unit	Quantity Required	Location	Quantity Issued	E&F Verified	Routing Form Number	Spares Number / Comment
52	Q3 NON-LEAD END (NON-IP END) SPIDER ASSEMBLY	MB	430096	A	EA	1	R1,1,1	1	[illegible]	82581	4 pcs.
Q3 INSTRUMENTATION WIRE FEEDTHRU ASSEMBLY		MB	430074	*	EA	1					
50	WIRE FEED-THRU TUBE	MB	369827	A	EA	3	ICB HAS				
51	SLEEVE INST. WIRE TUBE	MB	369996	A	EA	3	ICB HAS				
52	ANCHOR - INST. WIRE TUBE	MB	430009	*	EA	1	ICB HAS				
53	END INSTRUMENTATION WIRE TUBE	MB	430011	*	EA	1	ICB HAS				
HYPERTRONICS CONNECTOR ASSEMBLY 28 UNITS - Q3 MAGNET (LEAD END)		MB	418118	*	EA	1	Place part #'s 54-63 in one bag and label as MB-418118				
54	28 UNIT MALE (PIN) RACK	MA	418106	A	EA	1	R1,S1,L2	1	[illegible]	N/A	4 pcs.
55	TIE-DOWN LINK	MA	418109	*	EA	4	R1,1,2	4	[illegible]	83084	60 pcs.
56	CLAMPING BAR	MA	418112	*	EA	1	IB4 Bin	1	[illegible]	83081	38 pcs.
57	GROMMET	MA	418113	*	EA	1	IB4 Bin	1	[illegible]	83080	57 pcs.
58	THREADED STUD ASSEMBLY	MA	418114	*	EA	4	IB4 Bin	4	[illegible]	81575	43 pcs.
59	SUPPORT ARM WELDMENT (28 UNIT)	MC	418115	*	PAIR	1	IB4 Bin	1	[illegible]	80120	5 pcs.
60	SCREW - #6-32 X 3/8 LG.	MA	418116	*	EA	4	R1,1,2	4	[illegible]	79892	20 pcs.
61	SCREW - #4-40 X 1/2 LG.	MA	418117	*	EA	4	R1,1,2	4	[illegible]	79891	104 pcs.
62	ANTI-ARC KAPTON	MA	418143	*	EA	17	R1,1,2	17	[illegible]	N/A	1199 pcs.
63	CONNECTOR COVER & ACCESS COVER (28-UNITS)	MC	418067-A2	*	PAIR	1	R1,1,2	1	[illegible]	N/A	3 pcs.
HYPERTRONICS CONNECTOR ASSEMBLY 23 UNITS - Q3 MAGNET (RETURN END)		MB	418132	*	EA	1	Place part #'s 64-69 in one bag and label as MB-418132				
64	CLAMPING BAR	MA	418112	*	EA	1	IB4 Bin	1	[illegible]	83081	38 pcs.
65	GROMMET	MA	418113	*	EA	1	IB4 Bin	1	[illegible]	83080	57 pcs.

PK0278

Serial No. LMQXC07

TD - Engineering Fabr ion Component Kit List

ORIGINAI

	Description	Dwg Size	Number	Rev	Unit	Quantity Required	Location	Quantity Issued	E&F Verified	Routing Form Number	Spares Number / Comment
66	THREADED STUD ASSEMBLY	MA	418114	*	EA	4	IB4 Bin	4	[illegible]	81553	43 pcs.
67	SCREW - #6-32 X 3/8 LG.	MA	418116	*	EA	4	R1,1,2	4	[illegible]	79892	20 pcs.
68	23 UNIT FEMALE (PIN) RACK	MA	418136	A	EA	1	R1,S1,L2		APR		[illegible] APR
69	CONNECTOR COVER & ACCESS COVER (23-UNITS)	MC	418067-A	A1	PAIR	1	IB1 Has				0
	Q3 LEAD END (IP END) SPIDER ASSEMBLY	MD	430072	A	EA	1					
70	SHCS #8-32 x .75 LG. S.S.	MA	393071	*	EA	4	IB4 Bin	4	[illegible]	81436	49 pcs.
71	WASHER, NARROW, FLAT #6 S.S.	MA	393088	*	EA	2	IB4 Bin	2	[illegible]	81361	440 pcs.
72	HEX NUT #6-32 UNC-2B S.S.	MA	393089	*	EA	2	IB4 Bin	2	[illegible]	82594	128 pcs.
73	SHCS #6-32 UNC-2A x .625 LG S.S.	MA	393264	*	EA	4	IB4 Bin	4	[illegible]	82600	118 pcs.
74	SHCS #6-32 UNC-2A x 1.25 LG S.S.	MA	393266	*	EA	2	IB4 Bin	2	[illegible]	81107	72 pcs.
75	(Q3) MODULE ASSEMBLY BUS SPIDER ASSEMBLY	MD	430044	C	EA	1	IB4 Bin	1	[illegible]	81469	37 pcs.
76	BUS SPIDER HOUSING - BOTTOM	MB	430055	B	EA	1	IB4 Bin	1	[illegible]	82766	2 pcs.
77	BUS SPIDER HOUSING - COVER PLATE	MB	430073	*	EA	1	IB4 Bin	1	[illegible]	81455	4 pcs.
78	SPIDER BUMPER	MB	430075	B	EA	2	IB4 Bin	2	[illegible]	81447	112 pcs.
79	SPIDER BUS HOUSING COVER - THIN	MB	430176	*	EA	1	R2,2,2	1	[illegible]	82705	4 pcs.
80	INSULATED BEAM TUBE	MD	369838	A	EA	1	ICB				4 pcs.
81	MCBX CORRECTOR MOUNTING RING	ME	390037	C	EA	1	P/N	1	[illegible]	80790	4 pcs.
82	MQXA (Q1&Q3) INTERFACE SPECIFICATION	ME	390108	E	-	ICB HAS					
83	MQSXA CORRECTOR MOUNTING RING	MD	390209	C	EA	1	P/N	1	[illegible]	80791	4 pcs.
84	IP END DOME ASSEMBLY	ME	390221	C	EA	1	P/N	1	[illegible]	78610	4 pcs.

PK0278

Serial No. LMQXC07

ORIGINAL

TD - Engineering Fabr' 'ion Component Kit List

	Description	Dwg Size	Number	Rev	Unit	Quantity Required	Location	Quantity Issued	E&F Verified	Routing Form Number	Spares Number / Comment
85	MCBX CORRECTOR MTG FLAT WASHER	MB	390228	*	EA	12	IB4 Bin	12	QA	83114	70 pcs.
86	1/2"-20 UNF X 2.0" LG. SILVER PLATED SCREW FOR Q1/Q3 MQSXA	MA	390246	*	EA	8	IB4 Bin	2	QA	80783	118 pcs.
87	1/2"-20 UNF X 3.0" LG. SILVER PLATED SCREW FOR Q1/Q3 MCBX	MA	390247	*	EA	4	IB4 Bin	4	QA	74622	35 pcs.
88	MQSXA CORRECTOR TRANSPORTATION RING ADJUSTMENT SCREW	MB	390270	A	EA	4	IB4 Bin	4	QA	76665	20 pcs.
89	MCBX CORRECTOR TRANSPORTATION RESTRAINT NUT	MC	390294	*	EA	4	IB4 Bin	4	QA	76666	16 pcs.
90	(BEAM TUBE) COLD BORE FLANGE	MC	390300	B	EA	2	R10,1,2	2	QA	77028	26 pcs.
91	MCBX CORRECTOR MAGNET WELDMENT	MD	390312	*		ICB HAS					
92	SHIM, 0.05mm (.002")	MA	390482	*	EA	8	R2,S2,L4	8	QA	79123	45 pcs.
93	SHIM, 0.13mm (.005")	MA	390483	*	EA	8	R2,S2,L4	8	QA	79124	52 pcs.
94	SHIM, 0.25mm (.010")	MA	390484	*	EA	8	R2,S2,L4	8	QA	79125	35 pcs.
95	SHIM, 0.38mm (.015")	MA	390485	*	EA	8	R2,S2,L4	8	QA	79126	23 pcs.
96	Q3 A34B4 (MCSOX) CORRECTOR MOUNTING RING	ME	390664	*	EA	1	R1,S3,L3	1	QA	80927	4 pcs.
97	BODY TUBE EXTENSION WELD BACKING RING	MC	390666	*	EA	1	R7,3,4	1	QA	80910	4 pcs.
98	NON-IP END BODY TUBE EXTENSION WELDMENT	MD	390667	*	EA	1	Site 38	1	QA	81846	4 pcs.
99	Q3 COLDMASS NON-IP END DOME WELDMENT - MODIFIED	MD	390668	*	EA	1	Site 38	1	QA	~~81847~~	4 pcs.
100	Q1 & Q3 COLD MASS FIDUCIAL MOUNTING BLOCK	MB	390808	*	EA	2	R1,1,3	2	QA	82260	APR
101	NO. 10 (.190") - 32UNF X .188" LG. CUP POINT SET SCREW; 18-8 SST	MA	393030	*	EA	8	IB4 Bin	8	QA	82379	136 pcs.
102	A34B4 CORRECTOR MAGNET (MCSOX CORRECTOR MAGNET)		Item #12 on ME-390529	*		ICB HAS					
103	MQSXA CORRECTOR MAGNET		Item #9 on ME-390529	*		ICB HAS					

+2

Revision Request Control Number: 1779

Specification Number: 5520 - TR - 333729 Current Revision: E

Traveler or Document Title LHC Q3 LMQXC Module Assembly Traveler

Step #/Description of Revision:

7.0 Added Step. Added Electrical Inspection of the Q3 Bus assembly per production request.
19.0 Modified Steps. Added Step Numbers and instructions to each individual signoff.
24.0 Modified Steps. Added Step Numbers and instructions to each individual signoff.
26.0 Modified Steps. Added Step Numbers and instructions to each individual signoff.

John Szostak	Jim Rife	10/6/2005
Originator	Responsible Authority	Date
Revision Incorporated into the Traveler:	John Szostak	11/7/2005
	Revision Incorporated By	Date
Process Engineering Final Review:	Bob Jensen	11/7/2005
	Process Engineering/Designee	Date

Instructions for the completion of the Revision Request Form

Note(s):

Multiple steps may be effected by one Revision Request Form but only one specific Traveler or Document may be effected by each Revision Request Form.

If completing this form by hand, a Revision Request Control Number must be obtained before processing.

If completing this form entirely by electronic means, the printed copy to be filed in the Process Engineering Office is to be initialed by the individual incorporating the Revision Request and the individual who reviewed the Traveler or Document.

Originator Instructions:

1) Specification Number: - Enter the Specification Number of the Traveler or Document to be revised. (Document title is inserted automatically from the spec. #)

2) Current Revision: - Enter the Revision of the Traveler or Document to be revised.

3) Step# / Description of the Revision: - Enter a description of the revision to be made and the step# it applies to, if applicable. If needed to describe the revision attach a copy of the page(s). If the revision is coming from a related document such as a Discrepancy Report or an Engineering Order attach a copy of that document to the Revision Request Form.

4) Originator: - Originator is the person generating the form. (Select Name from List)

5) Responsible Authority: - Responsible Authority is person responsible for the process in question. (Select Name from List)

Process Engineering Office Instructions:

1) Revision Incorporated into the Traveler: - Signature of the individual who incorporated the revision.

2) Process Engineering Final Review: - Review the Traveler or Document revised, sign and date the form. The original completed Revision Request Form will be retained by the Process Engineering Office in the Revision Request Binder.

Traveler Title:	Specification No:	Revision:	DR No:
LHC Q3 LMQXC Module Assembly Traveler	333729	D	4304

Step No:	Drawing No:	Routing Form No:	Serial No:	Rework ID:
15.0	ME-430065		LMQXC07	0

Discrepancy Description:

Soldered area on lead end of bus extends into crossover area. This makes proper bus configuration unachievable.

Originator: Damon Bice

Date: 10/28/2005 10:28:18 AM

Cause of Nonconformance:

Technician error. Bus soldered correctly, but placed in tray backwards.

Responsible Authority: Rodger Bossert

Date: 6/18/2006 1:03:09 PM

Disposition:

(Issued Q3 Bus Assembly 333773, Serial No. MQXCb-08-1 and Q3 Module Assembly 333729, Serial No. LMQXC07-1 Steps 3.0 to 15.0 Rev. D per production request. 10/31/05 John Szostak). Take busses out of tray and reassemble with busses in opposite directions.

Responsible Authority: Rodger Bossert

Date: 6/18/2006

Corrective Action to Prevent Recurrence:

None needed. All bus trays are already assembled.

Responsible Authority: Rodger Bossert

Date: 6/18/2006

Corrective Action/Disposition Verified By: Bob Jensen

Date: 6/26/2006 1:23:57 PM

Will Configuration be affected?: ☐ YES ☑ NO

Identified problem area:

☐ Material ☐ Manpower ☑ Method ☐ Machine ☐ Measurement

Reviewed By: Bob Jensen

Date: 6/26/2006

Traveler Title: LHC Q3 LMQXC Module Assembly Traveler

Specification No: 333729

Revision: D

DR No: 4291

Step No: 4.0

Drawing No: 369900

Routing Form No:

Serial No: LMQXC07

Rework ID: 0

Discrepancy Description:

Due to time constarints, pre alignment of corrector coils has not been completed.

Originator: Damon Bice

Date: 9/23/2005 7:00:41 PM

Cause of Nonconformance:

Time constraints and stretched wire availability.

Responsible Authority: Thomas Page

Date: 9/26/2005 2:16:13 PM

Disposition:

Align the correctors at cold mass module assembly on the cold mass tooling.

Responsible Authority: Thomas Page

Date: 9/26/2005

Corrective Action to Prevent Recurrence:

None.

Responsible Authority: Thomas Page

Date: 9/26/2005

Corrective Action/Disposition Verified By: Bob Jensen

Date: 5/30/2006 10:06:12 AM

Will Configuration be affected?: ☐ YES ☑ NO

Identified problem area:

☐ Material ☑ Manpower ☐ Method ☐ Machine ☐ Measurement

Reviewed By: Bob Jensen

Date: 5/30/2006

Traveler Title: LHC Q3 LMQXC Module Assembly Traveler

Specification No: 333729

Revision: D

DR No: 4303

Step No: 10.1

Drawing No: 390529

Routing Form No:

Serial No: LMQXC07

Rework ID: 0

Discrepancy Description:

The MCBXA corrector had the corrector bus leads soldered to the corrector leads 180 degrees off from top. Instead of the corrector bus exiting the corrector at the TOP, (per print ME-390529) the corrector was wired with the corrector bus exiting the corrector at the BOTTOM. In other words, the corrector face plate was mounted "upside down" from as specified in above print, causing all wiring to be done "upside down"

Originator: Damon Bice

Date: 10/21/2005 9:48:46 AM

Cause of Nonconformance:

Orientation of face plate w/r/t corrector disregarded when mounting

Responsible Authority: Andy Hocker

Date: 10/21/2005 12:50:00 PM

Disposition:

Remount face plate in correct orientation (rotate 180 degrees). Do standard corrector resistance check to ensure leads are in correct position. Issue sign-off for re-work.

Responsible Authority: Andy Hocker

Date: 10/21/2005

Corrective Action to Prevent Recurrence:

None.

Responsible Authority: Andy Hocker

Date: 10/21/2005

Corrective Action/Disposition Verified By: Bob Jensen

Date: 5/30/2006 10:08:05 AM

Will Configuration be affected?: ☐ YES ☑ NO

Identified problem area:

☐ Material ☐ Manpower ☑ Method ☐ Machine ☐ Measurement

Reviewed By: Bob Jensen

Date: 5/30/2006

DR No: 4303

CERN
CH-1211 Geneva 23
Switzerland

the **Large Hadron Collider** project

AT MEL Document No.
LHC-MCSOX-FR-0001 rev. **1.0**

EDMS Document No.

Certificate of Conformity

Part name:	MCSOX Inner Triplet Corrector Package		
LHC Identification No.:	HCMCSOX001-AN000006	Serial No.:	HCMCSOX001-AN000006
Shipped To:	CERN	***Shipment No:***	***03***
		Shipment	***14/11/03***
Manufacturer:	Ansaldo	***Order No.:***	CD1000630
Related tech. Specification:	LHC-MQSXA-CI-0001 and addenda		
Related drawings:	LHCMQSXA0020 (620RM9829)		
Responsible person at CERN:	Mikko Karppinen	***Tel.***	+41 22 767 4305
		E-mail.	Mikko.Karppinen@cern.ch
Responsible person at Ansaldo:	Gianluigi Gaggero	***Tel.***	+39 010 6489 210
		E-mail.	gaggero.gianluigi@as-g.it

Ansaldo certifies that the delivered material conforms to the technical specification mentioned above:

Date: 11/11/03	***Name: G. Gaggero***	***Signature:*** Gianluigi Gaggero

Acceptance test results

		MCOSX	***MCOX***	***MCSSX***	***Remarks:***
RT dc resistance (Ω):	***Ansaldo:***	***11.99***	***12.94***	***13.38***	
	CERN:	***11.77***	***12.70***	***13.13***	
	CMA[1]:	11.88	12.80	13.25	
Inductance @1 kHz/100 Hz (mH)	***Ansaldo:***	***3.31*** ***3.31***	***4.48*** ***4.48***	***7.84*** ***7.85***	
	CERN	***3.31*** ***3.31***	***4.48*** ***4.48***	***7.83*** ***7.84***	
	CMA:				
R.T. leakage current to ground @ 1.5 kV (μA):	***Ansaldo:***	***0.076***	***0.063***	***0.27***	
	CERN:	***0.023***	***0.020***	***0.022***	
	CMA:	15 nA	12 nA	17 nA	500V per Mike Lamm

	Cold Mass Assembler
Visual inspection	
Name / Signature	
Date	

Accepted: ☐

Rejected: ☐

Comments (Ansaldo):	

Comments (CERN):	***Magnetic axis have not been measured at warm.***
	Scribe line made relative to the dowel pin holes on the conn. plate.

Comments (CMA):	

CERN
CH-1211 Geneva 23
Switzerland

the **Large Hadron Collider** project

AT MEL Document No.
LHC-MQSX-FR-0001 rev. **1.0**
EDMS Document No.

Certificate of Conformity

Part name:	MQSX Inner Triplet Skew Quadrupole Corrector		
LHC Identification No.:	HCMQSX_001-AN000007	Serial No.:	HCMQSX_001-AN000007
Shipped To:	CERN	***Shipment No:***	***02***
		Shipment	***14/11/03***
Manufacturer:	Ansaldo	***Order No.:***	CD1000630
Related tech. Specification:	LHC-MQSXA-CI-0001 and addenda		
Related drawings:	LHCMQSXA0020 (620RM9829)		
Responsible person at CERN:	Mikko Karppinen	***Tel.***	+41 22 767 4305
		E-mail.	Mikko.Karppinen@cern.ch
Responsible person at Ansaldo:	Gianluigi Gaggero	***Tel.***	+39 010 6489 210
		E-mail.	gaggero.gianluigi@as-g.it
Ansaldo certifies that the delivered material conforms to the technical specification mentioned above:			
Date: 10/11/03	***Name: G. Gaggero***		***Signature:*** Gianluigi Gaggero

Acceptance test results

		MQSX	Remarks:
RT dc resistance (Ω):	***Ansaldo:***	***7.60***	
	CERN:	***7.56***	
	CMA[1]:	7.60	
Inductance @1 kHz/100 Hz (mH)	***Ansaldo:***	***14.23 14.24***	
	CERN	***7.42 7.50***	
	CMA:	14.23/14.24	
R.T. leakage current to ground @ 1.5 kV (μA):	***Ansaldo:***	***0.01***	
	CERN:	***0.019***	
	CMA:	5nA @500V	

	Cold Mass Assembler	
Visual inspection		**Accepted:** ☐
Name / Signature		**Rejected:** ☐
Date		

Comments (Ansaldo):	

Comments (CERN):	***Magnetic axis have been measured at warm.***
	The scribe line is made relative to measured field at warm at CERN (correction of 27.3 mrad anti-clock-wise seen from the flange end).

Comments (CMA):	

CERN LHC MQXA

Acceptance Test at FNAL

QUALITY RECORD

Cryogenics Science Center

KEK, High Energy Accelerator Research Organization

Magnet ID :_____

Date of approval :_____

Approved by :_____ (FNAL)

:_____ (KEK)

Ver. 0
Ver A (with initial results)

1. Appearance Check

Procedure	Criteria
Check appearance of the magnet by visual inspection.	No harmful defects or deformation
Result at TOSHIBA	
Acceptable	
Result at FNAL	

2. Interface Dimensions

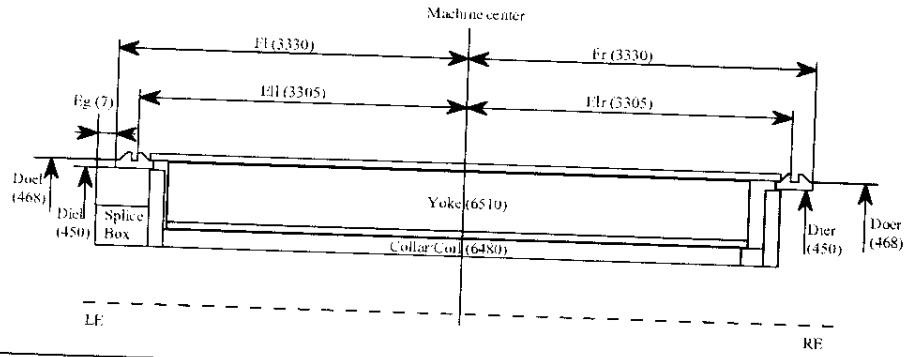

1) Dimensions

Unit:mm

Procedure	Criteria
1) Dimension Check Measure following dimensions a, b, c : Measuring range: every 45 deg. from 0 deg. d : Splice Box : four points	
a) Machine center - Interface	a) 3330 -6/+0
b) Interface outer diameter (Doel,Doer)	b) ϕ468 -4/+0
c) Interface inner diameter (Diel,Dier)	c) ϕ450 -4/+0
d) End Ring - Splice box(Eg)	d) 7 -5/+5

Result at TOSHIBA

Critera	3330 -6/+0		ϕ468 -4/+0		ϕ450 -4/+0		7
Position	Fl	Fr	Doel	Doer	Diel	Dier	Eg
0 deg.	3330.0	3330.5	467.56	467.03	450.11	449.37	6.48
45 deg.	3330.0	3330.0	466.86	467.12	449.54	449.63	
90 deg.	3330.0	3330.0	467.16	467.65	449.69	449.85	5.76
135 deg.	3330.0	3329.5	466.90	466.78	449.48	449.49	
180 deg.	3330.0	3330.0					5.80
225 deg.	3330.0	3330.5					
270 deg.	3330.5	3331.0					6.59
315 deg.	3330.0	3330.5					
Result	Acceptable		Acceptable		Acceptable		Acceptable

Result at FNAL

Critera	3330 -6/+0		ϕ468 -4/+0		ϕ450 -4/+0		7
Position	Fl	Fr	Doel	Doer	Diel	Dier	Eg
0 deg.	3330.5	3330.5					
~~45 deg.~~							
90 deg.	3330.0	3330.0					
~~135 deg.~~							
180 deg.	3330.0	3330.0					
~~225 deg.~~							
270 deg.	3330.0	3331.0					
~~315 deg.~~							
Result							

2) End ring interface		
Procedure		Criteria
Check the weld edge preparation using ϕ449 +0/-0.02 gauge.		1) The gauge shall be inserted into the end ring. 2) Measurement data will be reported if the gage cannot be inserted.
Measurement part	Result at TOSHIBA	Remarks
LE side	Acceptable	LE : 4mm
RE side	Acceptable	RE : 8mm
Measurement part	Result at FNAL	Remarks
LE side		
RE side		

3) Radial envelope	
Procedure	Criteria
Check shell radial envelope using ϕ530mm gauge. (dummy cold-mass support)	The gauge shall pass the magnet.
Result at TOSHIBA	
Acceptable	
Result at FNAL	

4) Magnet bore	
Procedure	Criteria
Check appearance of the magnet bore by visual inspection.	No harmful defects or deformation
Result at TOSHIBA	
Acceptable M.P.Lap was dameged at end section (LE side and RE side)	
Result at FNAL	

5) Magnet bus slot	
Procedure	Criteria
Check the bus slot using bus line model gauge.	The gauge shall pass the magnet bus slot.
Result at TOSHIBA	
Acceptable	
Result at FNAL	

6) Weight	
Procedure	Criteria
Measure the magnet weight.	Weight < 8500kg
Result at TOSHIBA	
8310 Kg	Acceptable
Result at FNAL	

7) Length of magnet lead, QPH wire, Voltage taps		
Procedure	Criteria	
Check the lengths of magnet lead, QPH wire, voltage taps.	1) Magnet lead : > 500mm from magnet LE end plate 2) Voltage taps wire : > 2000mm from magnet LE end plate 3) QPH wire : >2000mm from magnet LE end plate	
Result at TOSHIBA		
Measuring wire	Measured Value	Result
1) Magnet lead	> 500mm	Acceptable
2) Voltage taps	>2000mm	Acceptable
3) QPH wire	> 2000mm	Acceptable
Result at FNAL		
Measuring wire	Measured Value	Result
1) Magnet lead		
2) Voltage taps		
3) QPH wire		

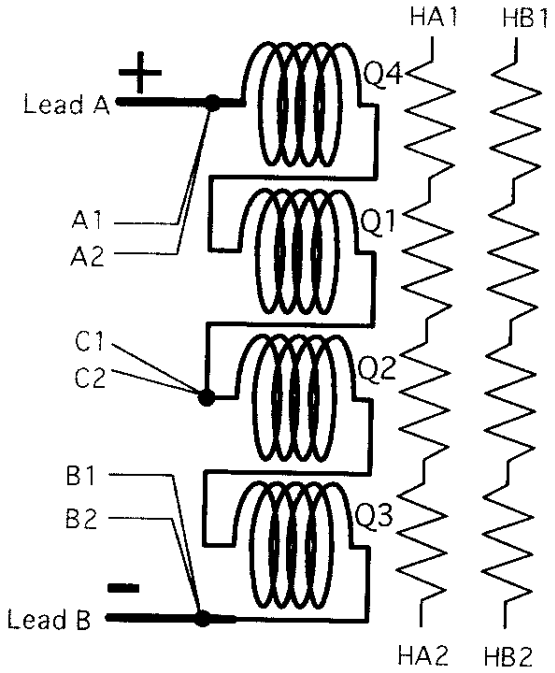

8) Cable tags	
Procedure	Criteria
Check the cable tags.	Consistent to the tag No. table.

Vtaps & QPH Tag No. table

Lead	Tag Name	Description
Voltage taps	A1, A2	Taps from A lead
	B1, B2	Taps from B lead
	C1, C2	Center taps
Quench heaters	HA1, HA2	Heater A
	HB1, HB2	Heater B

Result at TOSHIBA	
1)Voltage taps	Acceptable
2)Quench heaters	Acceptable
Result at FNAL	
1)Voltage taps	
2)Quench heaters	

3. Coil Resistance

Procedure	Criteria
Measure the magnet total resistance and coil temperature at coil current of DC1A. Calculate resistance at 20 °C; R_{20}. $R_{20}=V/I/(1+0.00393*(T_{coil}-20))$ V : Voltage between magnet leads (V) I : Coil current obtained by shut resistor (A) T_{coil} : coil temperature (°C)	1) Compare with R_{20} at TOSHIBA. Variation of R_{20} < 0.005 Ω 2) Voltage taps(C-A, C-B): Measurement Only

Result at TOSHIBA

T_{coil}			Not Reported			
Magnet total voltage (V)		Current (A)		Magnet total resistance R_{20} (Ω)		
Not Reported		Not Reported		6.85214		
Voltage taps tag No.	V (V)	I (A)	R_{20} (Ω)	Voltage taps tag No.	V (V)	I (A)	R_{20} (Ω)
C1 - A1	Not Reported	Not Reported	3.41682	C2 - A1	Not Reported	Not Reported	3.41672
C1 - A2	Not Reported	Not Reported	3.41682	C2 - A2	Not Reported	Not Reported	3.41672
C1 - B1	Not Reported	Not Reported	3.43012	C2 - B1	Not Reported	Not Reported	3.43012
C1 - B2	Not Reported	Not Reported	3.43012	C2 - B2	Not Reported	Not Reported	3.43012

Acceptable

Result at FNAL

T_{coil}			
Magnet total voltage (V)	Current (A)	Magnet total resistance R_{20} (Ω)	Variation (Ω) ($R_{20\text{-TOSHIBA}}$ - $R_{20\text{-FNAL}}$)
		6.816	
Voltage taps tag No.	R_{20} (Ω)	Voltage taps tag No.	R_{20} (Ω)
C1 - A1	3.4	C2 - A1	3.401
C1 - A2	3.399	C2 - A2	3.401
C1 - B1	3.4	C2 - B1	3.414
C1 - B2	3.413	C2 - B2	3.414

4. Instrumentations

1) Voltage taps

Procedure	Criteria
Check resistance of all voltage taps by four terminal method at 1A. Magnet lead : Q4 4th : + Magnet lead : Q3 3rd : -	Magnet lead + : A1, A2 (Pole4 Out) Magnet lead - : B1, B2 (Pole3 Out) Center taps : C1, C2 (Pole1 Out) Variation of R_{20}(A1),R_{20}(A2) : < 0.1% Variation of R_{20}(B1),R_{20}(B2) : < 0.1% Variation of R_{20}(C1),R_{20}(C2) : < 0.1%

Result at TOSHIBA

Voltage taps No.	Resistance(Ω)	Voltage taps No.	Resistance(Ω)	Variation(%)	Result
A1	0.00270	A2	0.00268	0.7	Acceptable
C1	3.41882	C2	3.41882	0.0	Acceptable
B1	6.84834	B2	6.84834	0.0	Acceptable

Result at FNAL

Voltage taps No.	Resistance(Ω)	Voltage taps No.	Resistance(Ω)	Variation(%)	Result
A1	.00270	A2	.0027		
C1	3.402	C2	3.401		
B1	6.813	B2	6.813		

2) QPH

Procedure	Criteria
Measure the resistance of QPH.	QPH resistance : 30 +4/-4Ω (HA,HB)

Result at TOSHIBA

QPH No.	QPH Resistance(Ω)	Result
HA	28.5	Acceptable
HB	28.6	Acceptable

Result at FNAL

QPH No.	QPH Resistance(Ω)	Result
HA	28.0	
HB	27.9	

5. Coil Inductance

Procedure	Criteria
Measure inductance of magnet at frequencies of 100Hz and 1kHz using LCR meter.	1) Variation of inductance Voltage taps No. C-A, inductance Voltage taps No. C-B : < 5% 2) Total inductance of the magnet :Measurement only

Result at TOSHIBA

Voltage taps tag No.	100Hz	Result (%)	1kHz	Result (%)	Voltage taps tag No.	100Hz	Result (%)	1kHz	Result (%)
C1 - A1	37.15	0.03	13.337	0.01	C2 - A1	37.15	0.03	13.337	0.01
C1 - A2	37.15		13.337		C2 - A2	37.15		13.337	
C1 - B1	37.16		13.339		C2 - B1	37.16		13.339	
C1 - B2	37.16		13.339		C2 - B2	37.16		13.339	

	100Hz	1kHz
Magnet	87.28	31.00

Acceptable

Result at FNAL

Voltage taps tag No.	100Hz	Result (%)	1kHz	Result (%)	Voltage taps tag No.	100Hz	Result (%)	1kHz	Result (%)
C1 - A1	37.181		13.403		C2 - A1	37.181		13.403	
C1 - A2	37.182		13.403		C2 - A2	37.181		13.403	
C1 - B1	37.193		13.400		C2 - B1	37.193		13.400	
C1 - B2	37.193		13.398		C2 - B2	37.193		13.400	

	100Hz	1kHz
Magnet	87.409	31.418

6. Turn to Turn Insulation

Procedure	Criteria
Apply impulse voltage of 1000V between the magnet leads and record the signal. Instrumentation: Impulse generator, recorder	Compare the signal with one at KEK. Attach rthe chart.
Result at TOSHIBA	
Acceptable	See appendix
Result at FNAL	

7. Coil Insulation

1) Insulation Resistance

Procedure	Criteria
Apply 1kV-DC to the coil in 1 min. and measure insulation resistance by using insulation tester. High voltage : Coils Ground : Collar, Yoke, Shell, QPH	Insulation resistance > 100MΩ

Result at TOSHIBA			
Temperature(°C)	Humidity(%)	Insulation(MΩ)	Result
25	22	> 2000	Acceptable

Result at FNAL			
Temperature(°C)	Humidity(%)	Insulation(MΩ)	Result

2) Hi-pot test

Procedure	Criteria
Apply 3kV-DC to the coil in 1 min. and measure leak current or insulation resistance. High voltage : Coil Ground : Collar, Yoke, Shell, QPH	No break down Record leak current or resistance.

Result at TOSHIBA			
Temperature (°C)	Humidity (%)	Leak current (mA)	Result
25	22	0.00	Acceptable

Result at FNAL			
Temperature (°C)	Humidity (%)	Leak current or resistance	Result

8. QPH Insulation

1) Insulation Resistance

Procedure	Criteria
Apply 1kV-DC to the QPH in 1 min. and measure insulation resistance by using insulation tester. High voltage : QPH Ground : Coil, Collar, Yoke, Shell	Insulation resistance > 100MΩ

Result at TOSHIBA

Heater No.	Temperature (°C)	Humidity (%)	Insulation(MΩ)	Result
HA	25	22	> 2000	Acceptable
HB			> 2000	Acceptable

Result at FNAL

Heater No.	Temperature (°C)	Humidity (%)	Insulation(MΩ)	Result
HA				
HB				

2) Hi-pot test

Procedure	Criteria
Apply 3kV-DC to the QPH in 1 min. and measure leak current or insulation resistance. High voltage : QPH Ground : Coil, Collar, Yoke, Shell	No break down Record leak current or resistance.

Result at TOSHIBA

Heater No.	Temperature (°C)	Humidity (%)	Leak current (mA)	Result
HA	25	22	0.00	Acceptable
HB			0.00	Acceptable

Result at FNAL

Heater No.	Temperature (°C)	Humidity (%)	Leak current or resistance	Result
HA				
HB				

9. QPH Discharge Test

1) Appearance check

Procedure	Criteria
Check appearance of QPH wires by visual inspection.	No harmful defects or deformation.
Result at TOSHIBA	
Acceptable	
Result at FNAL	

2) QPH discharge test

Procedure	Criteria
Charge the power supply above 850 V and fire QPHs.	No strange signal observed. Attach the chart.

Result at TOSHIBA		
HA	Acceptable	See appendix
HB	Acceptable	See appendix

3) QPH resistance

Procedure	Criteria
Measure resistance before/after the discharge test.	Resistance change < 10%

Result at TOSHIBA				
QPH No.	Before (Ω)	After (Ω)	Variation (%)	Result
HA	28.5	28.5	0.0	Acceptable
HB	28.6	28.6	0.0	Acceptable

Result at FNAL				
QPH No.	Before (Ω)	After (Ω)	Variation (%)	Result
HA				
HB				

CERN
CH-1211 Geneva 23
Switzerland

the **Large Hadron Collider** project

AT MEL Document No.
LHC-MCBX-FR-0001 rev. **1.0**

EDMS Document No.

Certificate of Conformity

Part name:	MCBX Inner Triplet Dipole Corrector		
LHC Identification No.:	HCMCBX_001-SI000030	Serial No.:	HCMCBX_001-SI000030
Shipped To:	CERN	***Shipment No:***	***30***
		Shipment	***30/07/04***
Manufacturer:	SIGMAPHI	Contract No.:	F375/LHC/LHC
Related tech. Specification:	LHC-MCBX-CI-0001 and addenda		
Related drawings:	LHCMCBX_0012 (1525-CN-1001)		
Responsible person at CERN:	Mikko Karppinen	***Tel.***	+41 22 767 4305
		E-mail.	Mikko.Karppinen@cern.ch
Responsible person at SIGMAPHI:	Damien Neuvéglise	***Tel.***	+33 2 97 01 08 80
		E-mail.	dneuveglise@sigmaphi.fr
SIGMAPHI certifies that the delivered material conforms to the technical specification mentioned above:			
Date: 30/07/04	***Name: D.Neuvéglise***		***Signature: D.Neuvéglise***

Acceptance test results

		MCBXV (Inner)	***MCBXH (Outer)***	***Remarks:***
RT dc resistance (Ω):	***SIGMAPHI:***	***17.5***	***21.5***	
	CERN:	***17.36***	***21.32***	
	CMA[1]:	17.40	21.38	
Inductance @1 kHz/100 Hz (mH)	***SIGMAPHI:***	***66.27 / 112.72***	***68.04/ 161.59***	
	CERN	***34.72/72.56***	***45.4/88.14***	
	CMA:	34.7/72.6	45.41 88.31	
R.T. leakage current to ground @ 1.5 kV (μA):	***SIGMAPHI:***	***18.75E-9A***	***75E-9A***	
	CERN:	***7.1nA***	***14nA***	
	CMA:	26 nA @ 500V	68 nA @ 500V	

	Cold Mass Assembler
Visual inspection	
Name / Signature	
Date	

Accepted: ☐

Rejected: ☐

[1] Cold Mass Assembler

Comments (SigmaPhi):	

Comments (CERN):	***Scribe line made relative to the magnetic axis of both MCBX and MCSTX measurement and shifted by 3.0 mrad clock-wise (0.6mm) relative to the dowel pins on the connexion side.***
	During the individual powering the MCBXV and MCBXH reached 700 A at 4.3K.
	During the combined powering of MCBXH and MCBXV field was rotated 0-360 deg at the nominal current @ 4.3 K.
	During the combined powering of MCBXH/V and MCSTX field was rotated 0-360 deg at the 80 % nominal current @ 4.3 K with MCTX and MCSX set at 100 A.

Comments (CMA):	

CERN
CH-1211 Geneva 23
Switzerland

the **Large Hadron Collider** project

AT MEL Document No.
LHC-MCSTX-FR-0001 rev. **1.0**

EDMS Document No.

Certificate of Conformity

Part name:	MCSTX Inner Triplet Sextupole Dodecapole Insert		
LHC Identification No.:	HCMCSTX001-CE000010	***Serial No.:***	HCMCSTX001-CE000010
Shipped To:	FNAL	***In MCBX assembly:***	HCMCBX_001-SI000030
		Shipment No:	***17***
Manufacturer:	CERN	***Shipment Date:***	***14/01/05***
Related tech. Specification:	LHC-MCSTX-CI-0001 (in preparation)		
Related drawings:	LHCMCSTX0001		
Responsible person at CERN:	Mikko Karppinen	***Tel.***	+41 22 767 4305
		E-mail.	Mikko.Karppinen@cern.ch

CERN certifies that the delivered material conforms to the technical specification mentioned above:

Date: 22/10/04	***Name: M. Karppinen***	***Signature:*** *Mikko Karppinen*

Acceptance test results

		MCSX	***MCTX***	***Remarks:***
RT dc resistance (Ω):	***CERN:***	***27.85***	***98.09***	
	CMA[1]:	27.93	98.35	
Inductance @1 kHz/100 Hz (mH)	***CERN***	***2.26/4.77***	***24.06/31.23***	***=> L serial***
	CMA:	2.26 / 4.77	24.10 / 31.34	
R.T. leakage current to ground @ 500 V (μA):	***CERN:***	***1.7 nA***	***5 nA***	
	CMA:	25 nA @ 500V	22 nA @ 500V	

	Cold Mass Assembler
Visual inspection	
Name / Signature	
Date	

Accepted: ☐

Rejected: ☐

[1] Cold Mass Assembler

Comments (CERN):	***Magnetic axis have been measured at warm. The initial roll angle of -2.6 mrad was reduced to 0.4 mrad by off-setting the scribe line on the MCBX #30 by 0.6 mm counter-clock-wise (seen from the conn.end).***	
	MCSX	***MCTX***
	dx=-0.04mm	***dx=-0.07mm***
	dy=0.6mm	***dy=0.53mm***

Comments (CMA):	