Document ID:

8461

LHC Q3 LQXC Cryostat Shipping Traveler

333731 / Rev. D

Job No:	**389**
MSD Project/Task No.:	**300/1.1.1.6.3**
M + S Project/Task No.:	**300/1.1.1.6.3**

Place This Side Down For Scanning!!!

Magnet Travelers

LQXC07-0

Document ID:

8461

Job No.:

389

Project/Task No.

300/1.1.1.6.3

Series:

LQXC

Serial No:

LQXC07

Rework ID:

0

Specification No.:

333731

Revision:

D

LQXC07-0

Fermi National Accelerator Laboratory
Batavia, IL 60510

LARGE HADRON COLLIDER
Q3 - LQXC
SHIPPING TRAVELER

Reference Drawing(s):
Q1/Q3 Shipping Fixture Final Assembly
(ME-390729)
Q3 Magnet Shipping Assembly
(ME-390728)

Project/Task Number: *300/1.1.1.6.3*	**Job Number:** *389*
Released By: *Bob Jensen*	**Magnet/Device Series:** *LQXC*
Date Issued: *1/12/2006 8:57:14 AM*	**Scanned Pages:** 46
Prepared by: *B. Jensen, J. Szostak*	

Title	Signature	Date
TD / E&F Process Engineering	*Bob Jensen* Bob Jensen / Designee	*11/10/05*
TD / LHC Production Supervisor	*Jim Rife* Jim Rife / Designee	*11/11/05*
TD / LHC Production Engineer	*Rodger Bossert* Rodger Bossert / Designee	*11/11/05*
TD / LHC Project Engineer Cryostat	*Tom Nicol* Tom Nicol / Designee	*11/11/05*
TD / LHC Project Physicist	*Andy Hocker* Michael Lamm / Designee	*11/11/05*
TD / LHC Program Manager	*Jim Kerby* Jim Kerby / Designee	*11/11/05*

Revision Page (1 of 2)

Revision	Step No.	Revision Description	TRR No.	Date
None	N/A	Initial Release	N/A	1/14/05
A	1.6	Added Step. "Protect the bellows during all stages of production." **DR No. HGQ-0500.**	1706	2/28/05
	4.3	Modified Step. Moved to after electrical Inspection per Production request. LQXC01. New Step 6.7.		
	4.4	Modified Step. Moved to after electrical Inspection per Production request. LQXC01. New Step 6.8.		
	4.8	Modified Step. Changed to "At the Non-IP End, measure and record the length of the conductor (in mm) from the 'flat' of the magnet dome to the end of the conductor and record in the box provided below. New Step 4.5. (+/- 10mm)" LQXC01.		
	5.3	Modified Step. Moved to after electrical Inspection per Production request. LQXC01. New Step 6.9.		
	5.4	Modified Step. Moved to after electrical Inspection per Production request. LQXC01. New Step 6.10.		
	5.7	Modified Step. Changed to "At the IP End, measure and record the length of the conductor (in mm) from the 'flat' of the magnet dome to the end of the conductor and record in the box provided below. (+/- 10mm)" New step 5.5. LQXC01.		
	6.8	Added Step. "Label the Leads "A" and "B" as per Figure 6.8-A below."		
	7.2	Modified Step. Added "...and the Fixed End Flange (ME-390020)..." per LQXC01.		
	7.4.1	Modified Step. Changed to "Install Cold Mass Collar (ME-390202) and secure using Bolt (MA-393191), and Plain Washers (MA-393060), and Lock Washers (MA-393061) per Q3 Shipping Restraint Assembly (ME-390250)."		
	7.5.1	Modified Step. Changed to "Install Cold Mass Collar (ME-390202) and secure using Bolt (MA-393191), and Plain Washers (MA-393060), and Lock Washers (MA-393061) per Q3 Shipping Restraint Assembly (ME-390250)."		
	7.9	Modified Step. Changed to "Install the Vinyl Flange Covers (MA-390491), (MA-390492), (MA-390493), (MA-390494), & the Alignment Fiducial Covers (MA-390495)."		
	7.10	Modified Step. Changed to "Are Accelerometers (Shock Recorders) available for installation? ☐Yes - Install Accelerometers as per Responsible Authority and Figure 8.10-A. below. ☐No - Accelerometers are NOT available for installation." **DR No. HGQ-0512.**		
	7.11	Modified Step. Added Note "**Example: If Serial No. at bottom of Traveler is: LQXC02 Stencil Serial No. should be:HCLQXC_001-FL000002**"		
	7.12	Modified Step. Added Note "**Example: If Serial No. at bottom of Traveler is: LQXC02 Stencil Serial No. should be:HCLQXC_001-FL000002**"		
	9.3	Modified Step. Changed MA-393384 to MA-393386, per production request.		
B	3.3	Added Step. "Perform a Leak Check of the Q3 Cryostat Assembly." Per production request.	1737	5/25/05
	4.3	Modified Step. Added Note. "**Protect the Bellows during all stages of production.**"		
	6.2	Modified Step. Modified Electrical Table. Removed "Voltage Tap Serial Numbers".		
	7.2	Modified Step. Added Note. "**Protect the Bellows during all stages of production.**"		
	7.8	Modified Step. Added Note. "**Protect the Bellows during all stages of production.**"		

Revision Page (2 of 2)

Revision	Step No.	Revision Description	TRR No.	Date
C	3.3	Removed Step. "Perform a Leak Check of the Q3 Cryostat Assembly." Performed at the end of Cryostat Final Assembly (333730).	1764	8/4/05
	6.0	Moved Step. Moved Electrical Inspection to after Purge of Magnet per production request.		
	9.3	Modified Step. Changed to "Acquire and install the following parts." Per production request.		
D	4.0	Modified Steps. Added Step Numbers and instructions to each individual signoff.	1791	11/10/05
	5.2	Modified Step. Added Crew Chief signoff.		

Ensure appropriate memos and specific instructions are placed with the traveler before issuing the sub traveler binder to production.

1.0 General Notes

1.1 All steps that require a sign-off shall include the Technician/Technician(s)s first initial and full last name.

1.2 No erasures or white out will be permitted to any documentation. All incorrectly entered data shall be corrected by placing a single line through the error, initial and date the error before adding the correct data.

1.3 All Discrepancy Reports issued shall be recorded in the left margin next to the applicable step.

1.4 Personnel shall perform all tasks in accordance with current applicable ES&H guidelines and those specified within the step.

1.5 Cover the product/assembly with Green Herculite (Fermi stock 1740-0100) when not being serviced or assembled.

1.6 Protect the Bellows during all stages of production.

2.0 Parts Kit List

2.1 Attach the completed Parts Kit for this production operation to this traveler. Ensure that the serial number on the Parts Kit matches the serial number of this traveler. Verify that the Parts Kit received is complete.

Process Engineering/Designee _____ Date 1/13/06

3.0 Magnet Electrical Preparation

3.1 Does magnet require a purge of compressed dry nitrogen (N_2)?

☒ YES, PURGE REQUIRED, Proceed to Step 3.2.

☐ NO, PURGE NOT REQUIRED, Proceed to Step 4.0.

STOP

Responsible Authority/Physicist — Date: 20-FEB-2006

3.2 If YES box was checked in Step 3.1, perform a required purge for a minimum of 2.5 days (3 days maximum) at a flow rate of 5 CFH of N_2.

	Purge Time	Purge Date	Purge Flow Rate
Start	2:30 PM	2/20/06	5CFH
Finish		2/23/06	5 CFH

Technician(s) — Date: 2/20/06

4.0 Final Electrical Inspection

4.1 At the IP End, jumper the two 5Ka leads together. At the Non-IP End, measure the resistance of the 5Ka Busses and record below.

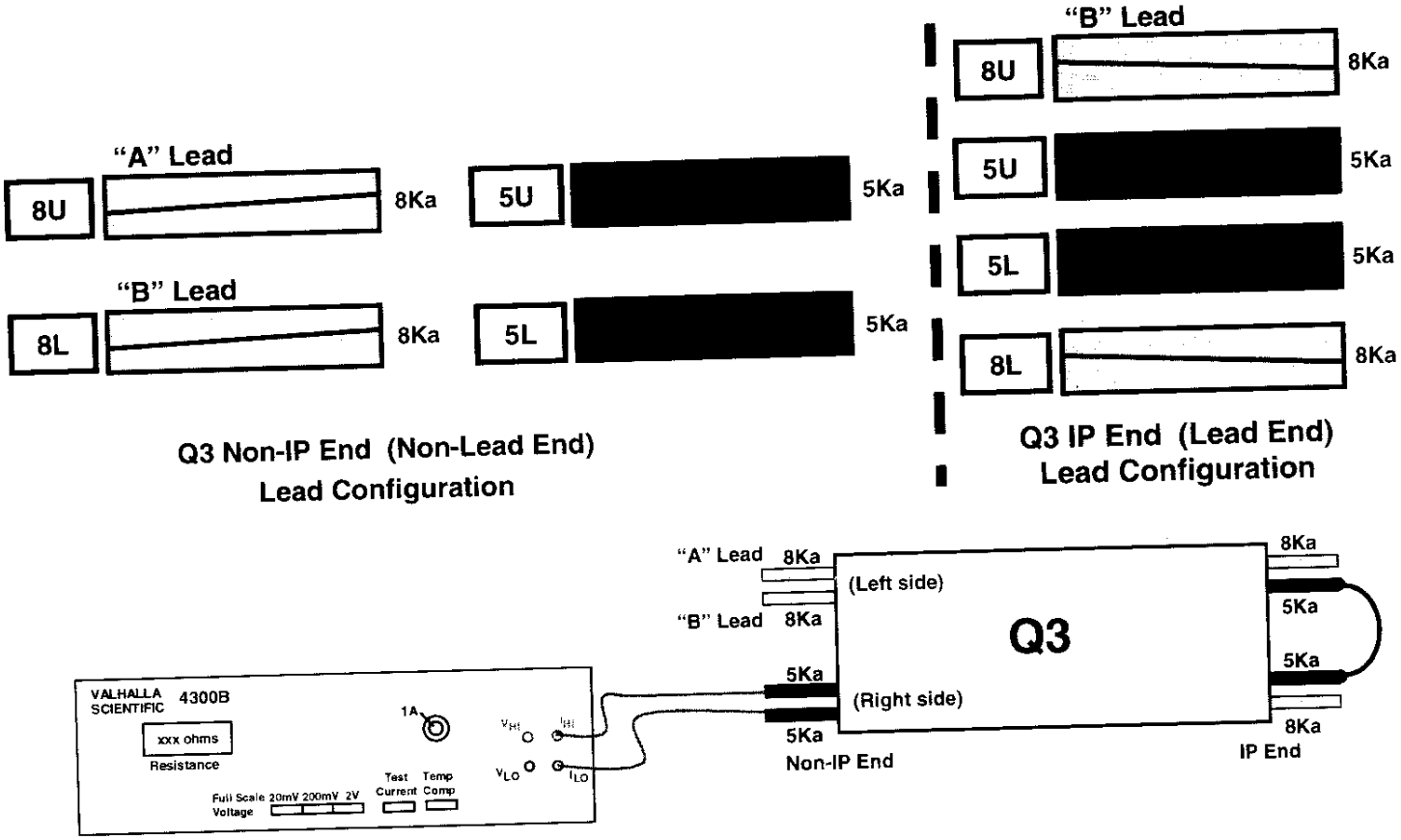

Figure 4.1-A

Q3 Non-IP End	
Lead	**Resistance**
5Ka Leads (Jumpered at IP End)	~~[illegible]~~ ~~[illegible]~~ CP 14.1 mΩ

[illegible] 2/[illegible]/06
Technician(s) Date

Perform an electrical inspection on each of the Individual Quadrants and the Cold Mass. Refer to the Valhalla and Leader Free Standing Coil Measurement Procedure (ES-292306).

To measure the Resistance of a Q3 Cold Mass:

1. Use Valhalla Scientific 4300B digital micro-ohmmeter.
2. Set Test Current to 0.1 amp.
3. Set Scale to 2V full scale.
4. Turn temperature compensation on.
5. Turn test current off.
6. Connect I_{HI} to "A" Lead as shown in figure 4.2-A.
7. Connect I_{LO} to "B" Lead as shown in figure 4.2-A.
8. Turn test current on.
9. Connect V_{HI} and V_{LO} to voltage taps as shown in resistance table.
10. To measure Total with leads, connect V_{HI} to "A" Lead and V_{LO} to "B" Lead.
11. At the IP End, jumper the 8Ka leads as shown in Figure 4.2-A.
12. Read resistance and record in traveler.

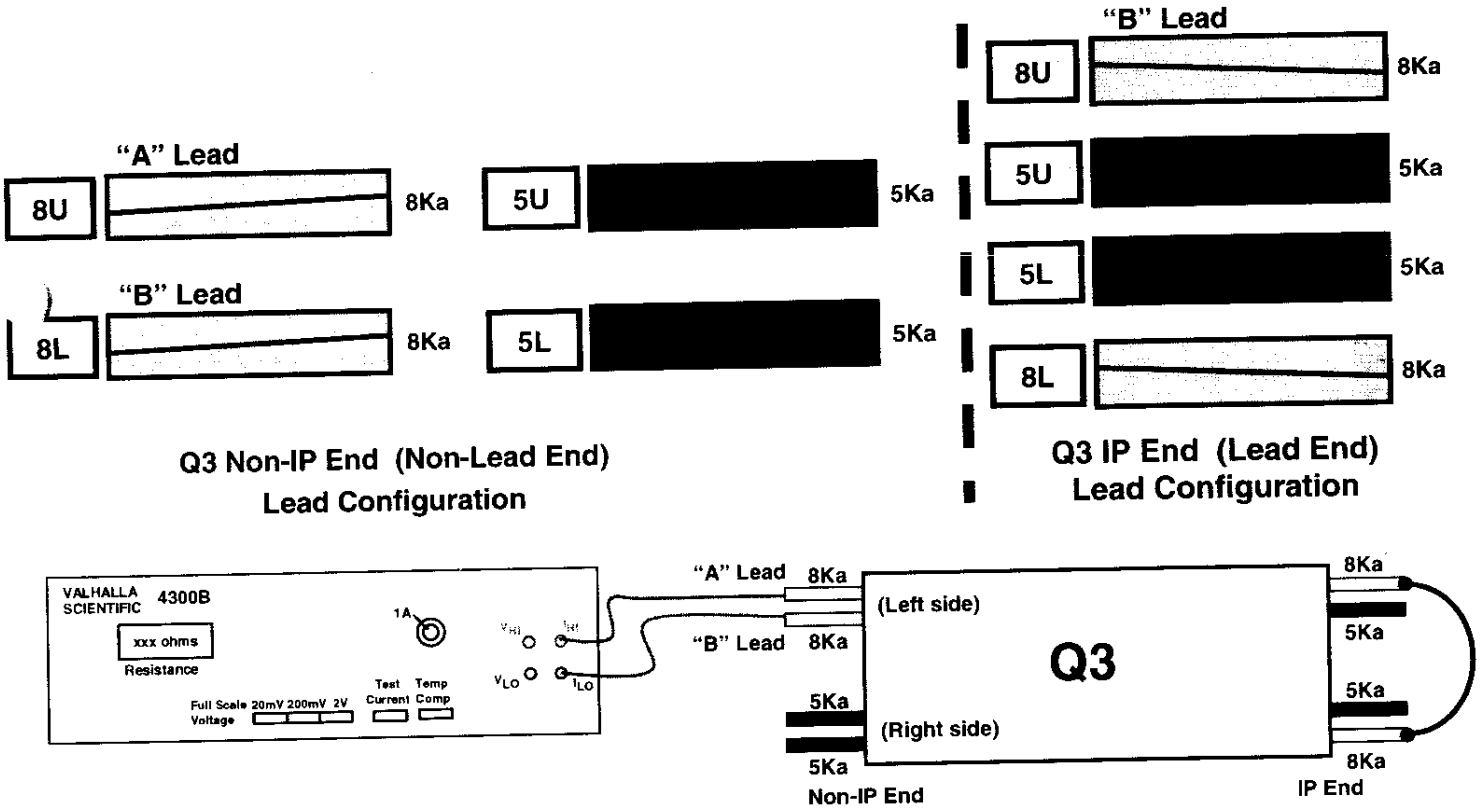

Figure 4.2-A

4.2 Measure the Resistance of the Q3 Cold Mass.

(Q3) Resistance				Nominal 3.35 to 3.45 Ω
Connect	Fermi	CERN	KEK	Total Resistance
V_{HI}	VTa1Q3	EE1113	a1	3.39 Ω
V_{LO}	VTc1Q3	EE1213	c1	
V_{HI}	VTc1Q3	EE1213	c1	3.40 Ω
V_{LO}	VTb1Q3	EE1313	b1	
V_{HI}	VTa1Q3	EE1113	a1	6.78 Ω
V_{LO}	VTb1Q3	EE1313	b1	

		Total Resistance with Leads
		Nominal 6.75 to 6.85 Ω
V_{HI}	"A" Power Lead	6.79 Ω
V_{LO}	"B" Power Lead	

O. Fuang
Technician(s)

2.23.06
Date

4.3 Measure the resistance of Redundant Voltage Taps.

Q3 Redundant Voltage Taps				Nominal 3.35 to 3.45 Ω
Connect	Fermi	CERN	KEK	Resistance
V_{HI}	VTa2Q3	EE1123	a2	3.38 Ω
V_{LO}	VTc2Q3	EE1223	c2	
V_{HI}	VTc2Q3	EE1223	c2	3.39 Ω
V_{LO}	VTb2Q3	EE1323	b2	

O. Fuang
Technician(s)

2.23.06
Date

To measure Ls and Q of a Q3 Cold Mass:

1. Use Agilent 4263B LCR Meter.
2. Turn power on by pushing line button. Wait 30 seconds until display screen is lit.
3. Recall program #1. To do this, push recall (Rcl), then push #1, then push Enter.
4. Push Auto/Hold button to release hold.
5. Verify that the frequency displayed in the upper right corner of the display screen is 1000 Hz and the level recorded in the lower right corner of the display screen is 1V or 1000 mV.
6. Connect H_{cur} to "A" power lead as shown in figure 4.4-B
7. Connect L_{cur} to "B" power lead as shown in figure 4.4-B.
8. Connect H_{pot} and L_{pot} buttons to voltage taps as shown below.
9. Read Ls and Q from display and record in table.

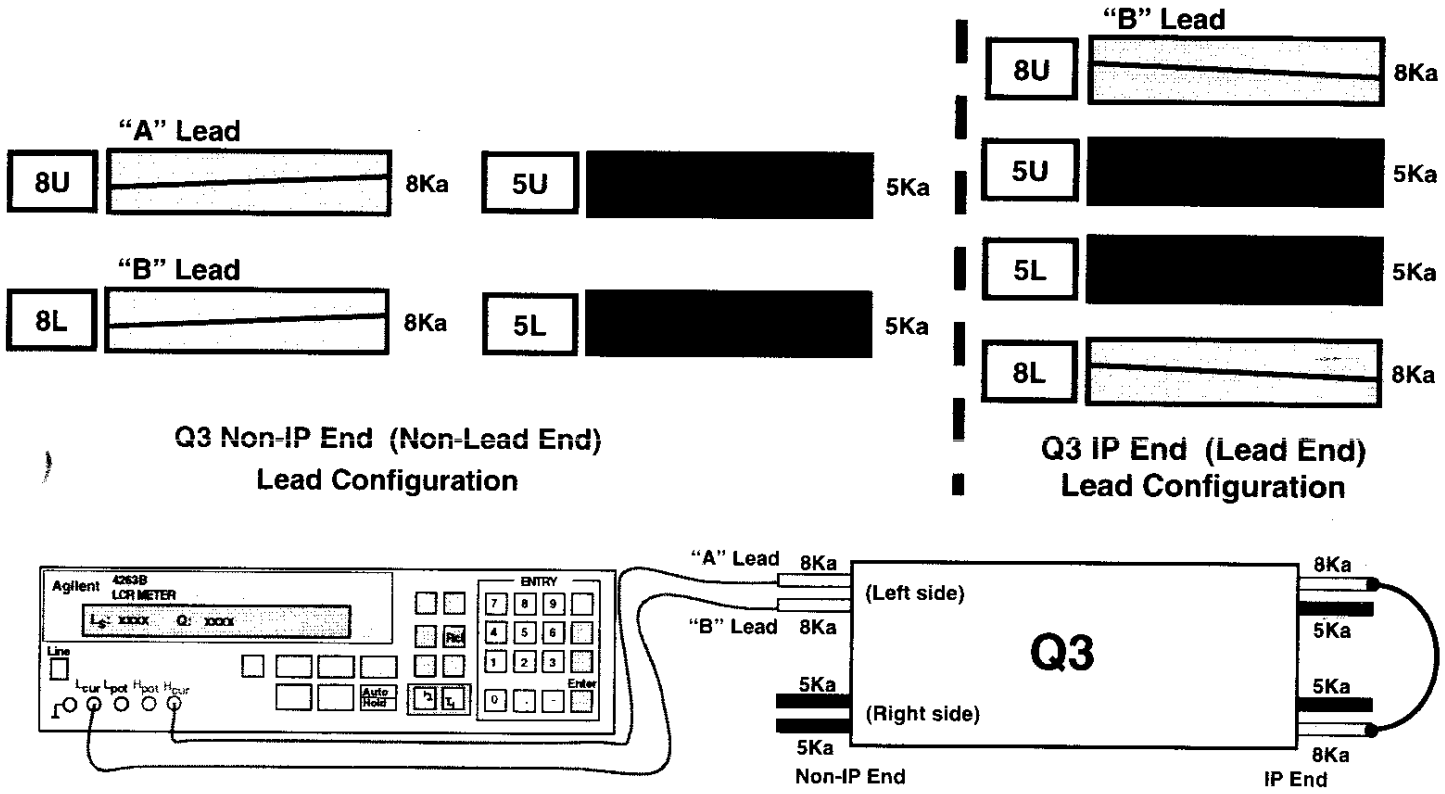

Figure 4.4-B

4.4 Measure the Inductance (Ls) of the Q3 Cold Mass.

(Q3) Inductance				Nominal 15 to 16 mH
				Total Inductance
Connect	Fermi	CERN	KEK	
H_{POT}	VTa1Q3	EE1113	a1	15.223 mH
L_{POT}	VTc1Q3	EE1213	c1	
H_{POT}	VTc1Q3	EE1213	c1	15.224 mH
L_{POT}	VTb1Q3	EE1313	b1	

				Nominal 30 to 32 mH
				Total Inductance
H_{POT}	VTa1Q3	EE1113	a1	30.450 mH
L_{POT}	VTb1Q3	EE1313	b1	

Technician(s) Date 2/23/06

4.5 Measure the Q-Factor (Q) of the Q3 Cold Mass.

(Q3) Q-Factor				Nominal 1.0 to 1.2
				Total Q
Connect	Fermi	CERN	KEK	
H_{POT}	VTa1Q3	EE1113	a1	1.1
L_{POT}	VTc1Q3	EE1213	c1	
H_{POT}	VTc1Q3	EE1213	c1	1.1
L_{POT}	VTb1Q3	EE1313	b1	

				Nominal 1.0 to 1.2
				Total Inductance
H_{POT}	VTa1Q3	EE1113	a1	1.1
L_{POT}	VTb1Q3	EE1313	b1	

Technician(s) Date 2.23.06

To measure the resistance of a Thermometer (RTD):

1. Use Hewlett Packard HP3457A digital multimeter.
2. Record temperature of building within +/- 5 degrees.
3. Press line button to turn line on.
4. Connect wires as shown in Figure below.
   - U+ (Black) to Sense HI
   - I+ (Yellow) to Input HI
   - U- (Red) to Sense LO
   - I- (Green) to Input LO
5. Push blue button (function key) once.
6. Push OHMF button.
7. Verify arrow in readout is above the 4WΩ (meaning a 4 wire resistance measurement).
8. Read resistance in ohms and record in traveler.

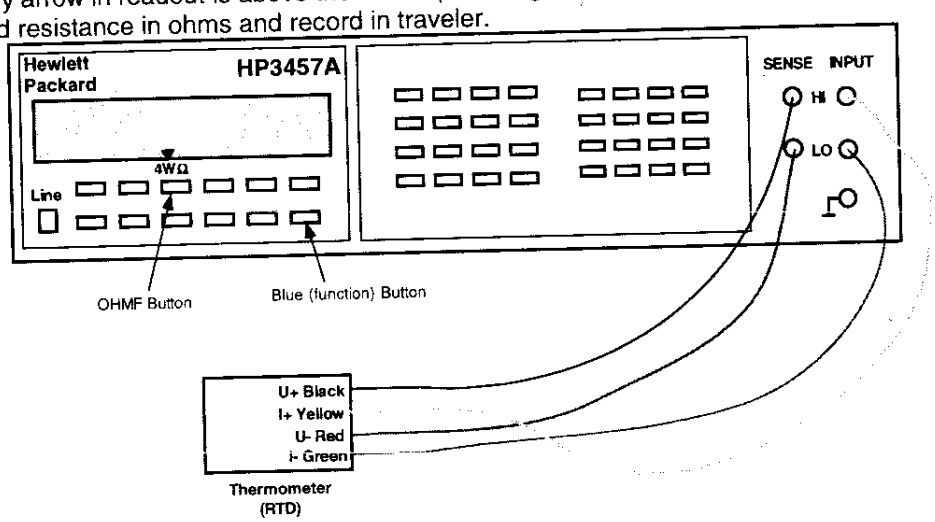

To measure the resistance of a Cryogenic (Warm-up) Heater

1. Use Hewlett Packard HP3457A digital multimeter.
2. Record temperature of building within +/- 5 degrees.
3. Press line button to turn line on.
4. Connect wires as shown in Figure below.
5. Push blue button (function key) once.
6. Push OHMF button.
7. Verify arrow in readout is above the 4WΩ (meaning a 4 wire resistance measurement).
   Note: Although this is technically a 4 wire measurement, it is effectively a 2 wire measurement, since there are only 2 wires connected to each heater.
8. Read resistance in ohms and record in traveler.

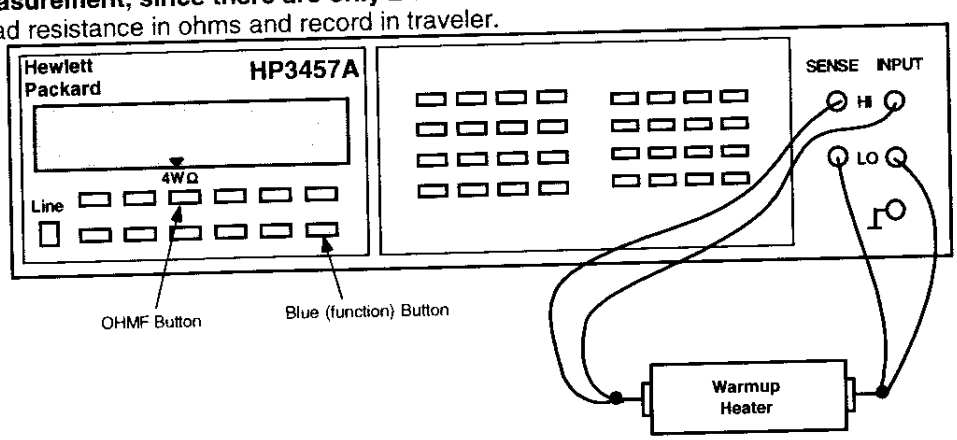

4.6 Measure the resistance of the RTD's and Cryogenic (Warm-up) Heaters. Record MFR Resistance (Expedition) for RTD's.

Q3 - RTD's and Cryogenic (warm-up) Heaters				
Temperature of Building (± 5°): 70° F				
Component	**Fermi**	**CERN**	**Range**	**Resistance**
Q3 Cryogenic (warm-up) Heater (LE) - wire at top (CERN #1 I+)	W1aQ3	EH8313+	16 to 18.5 Ω	17.71 Ω
Q3 Cryogenic (warm-up) Heater (LE) - wire at bottom (CERN #1 I-)	W2aQ3	EH8313-		
Q3 Cryogenic (warm-up) Heater (Non-LE) - wire at top (CERN #2 I+)	W1bQ3	EH8323+	16 to 18.5 Ω	17.34 Ω
Q3 Cryogenic (warm-up) Heater (Non-LE) - wire at bottom (CERN #2 I-)	W2bQ3	EH8323-		

Note(s):

Record the appropriate RTD Serial Numbers and Mfr. Resistance in the table below.

RTD Serial No.	Fermi	CERN	Measured Ω	Mfr. Resistance (Expedition)
Q3 RTD, primary: CX_LS_X17279	TaQ3	TT8313	72.058	~~[illegible]~~ 69.263 Ω
Q3 RTD, redundant: CX_LS_X17213	TbQ3	TT8323	65.939	62.961 Ω

C. E[illegible]
Technician(s)

2/23/06
Date

4.7 Using the Hewlett Packard HP3457A digital multimeter, measure the Protection (Strip) Heater Resistance for Q3.

Q3 Protection (Strip) Heater Resistance					
Fermi	CERN	KEK	Description	Limit	Resistance
H1aQ3	YT1113+	HA1	Circuit A	28 to 32 Ω	27.762 Ω
H2aQ3	YT1113-	HA2			
H1bQ3	YT1123+	HB1	Circuit B	28 to 32 Ω	21.714 Ω
H2bQ3	YT1123-	HB2			

C. Fries
Technician(s)

2/23/06
Date

4.8 Using the Valhalla 4300B, connect 10mA applied voltage thru the corrector Power Leads. Measure Resistance and record in the table below. Record Initial resistance of Corrector Element and record below.

Corrector Bus Leads

	V3A	V3B	H3A	H3B	B3A	B3B	B6A	B6B
	V2A	V2B	H2A	H2B	B4A	B4B	A4A	A4B
	V1A	V1B	H1A	H1B	A2A	A2B	A3A	A3B

(View Looking from DFBX into Q3 – Non-IP End)

Corrector Assembly	Corrector Element	Readout Labels		Power Labels I_{HI}	Power Labels I_{LO}	Resistance	Initial Resistance
MQSX	MQSX	A2A	EE8223	A2A	A2B	.05	MQSX
		EE8223	A2B			7.57	
		A2A	A2B			7.62	
MCBXA	MCBXV	V3A	EE8113	V3A	V3B	.01	MCBXV
		EE8113	V3B			17.23	
		V3A	V3B			17.24	
	MCBXH	H3A	EE8123	H3A	H3B	.01	MCBXH
		EE8123	H3B			21.15	
		H3A	H3B			21.16	
	MCTX	B6A	EE8613	B6A	B6B	.01	MCTX
		EE8613	B6B			97.48	
		B6A	B6B			97.49	
	MCSX	B3A	EE8313	B3A	B3B	.01	MCSX
		EE8313	B3B			27.07	
		B3A	B3B			27.08	
MCSOX	MCOSX	A4A	EE8423	A4A	A4B	.01	MCOSX
		EE8423	A4B			11.79	
		A4A	A4B			11.79	
	MCOX	B4A	EE8413	B4A	B4B	.01	MCOX
		EE8413	B4B			12.71	
		B4A	B4B			12.71	
	MCSSX	A3A	EE8323	A3A	A3B	.01	MCSSX
		EE8323	A3B			13.14	
		A3A	A3B			13.14	

Technician(s) _____ Date 2-23-06

4.9 Check Q1 & Q2 Instrumentation Bus Wires for Continuity.

Table 4.9

Module	Pin	Fermi	CERN	KEK	Description	Done
M2	1	VTa1Q1	EE1111	a1	Q1 Lead Voltage Tap "a" , primary	✓
M2	2	VTa2Q1	EE1121	a2	Q1 Lead Voltage Tap "a", redundant	✓
M2	3	VTc1Q1	EE1211	c1	Q1 Center Voltage Tap "c", primary	✓
M2	4	VTc2Q1	EE1221	c2	Q1 Center Voltage Tap "c", redundant	✓
M2	5	VTb1Q1	EE1311	b1	Q1 Lead Voltage Tap "b", primary	✓
M3	1	VTc1Q2a	EE1212		Q2a Center Voltage Tap "c", primary	✓
M3	3	VTa2Q2a	EE1122		Q2a lead Voltage Tap "a", redundant	✓
M3	4	VTa1Q2a	EE1112		Q2a Lead Voltage Tap "a", primary	✓
M3	5	VTb2Q1	EE1321	b2	Q1 Lead Voltage Tap "b", redundant	✓
M4	1	VTc2Q2a	EE1222		Q2a Center Voltage Tap "c", redundant	✓
M4	3	VTb1Q2a	EE1312		Q2a Lead Voltage Tap "b", primary	✓
M4	4	VTb2Q2a	EE1322		Q2a Lead Voltage Tap "b", redundant	✓
M4	5	VTb1Q2b	EE1612		Q2b lead Voltage Tap "b", primary	✓
M5	2	VTc2Q2b	EE1522		Q2b Center Voltage Tap "c", redundant	✓
M5	3	VTc1Q2b	EE1512		Q2b Center Voltage Tap "c", primary	✓
M5	5	VTb2Q2b	EE1622		Q2b Lead Voltage Tap "b" redundant	✓
M6	1	VTa1Q2b	EE1412		Q2b Lead Voltage Tap "a", primary	✓
M6	2	VTa2Q2b	EE1422		Q2b Lead Voltage Tap "a", redundant	✓
M8	1	VTH1	EE8121		Corrector voltage tap Q1-H1 (skew dipole) (on MCBX, MCBXH, A+ lead)	✓
M8	2	VTV1	EE8111		Corrector voltage tap Q1-V1 (normal dipole) (on MCBX, MCBXV A+ lead)	✓
M8	3	VTH2	EE8122		Corrector voltage tap Q2-H2 (skew dipole) (on MCBX, MCBXH, A+ lead)	✓
M8	4	VTV2	EE8112		Corrector voltage tap Q2-V2 (normal dipole) (on MCBX, MCBXV, A+ lead)	✓
M10	1	W1aQ1	EH8311+		Q1 Cryogenic Heater lead end - wire at top (CERN #1 I+)	✓
M10	2	W2aQ1	EH8311-		Q1 Cryogenic Heater lead end - wire at bottom (CERN #1 I-)	✓
M10	3	W1bQ1	EH8321+		Q1 Cryogenic Heater non-lead end - wire at top (CERN #2 I+)	✓
M10	4	W2bQ1	EH8321-		Q1 Cryogenic Heater non-lead end - wire at bottom (CERN #2 I-)	✓
M11	1	W1aQ2A	EH8312+		Q2A Cryogenic Heater lead end - wire toward cold mass end plate (CERN #1 I+)	✓
M11	2	W2aQ2A	EH8312-		Q2A Cryogenic Heater lead end - wire toward cold mass mag center (CERN #1 I-)	✓
M11	3	W1bQ2A	EH8322+		Q2A Cryogenic Heater non-lead end- wire toward cold mass end plate (CERN #2 I+)	✓

Table 4.9

Module	Pin	Fermi	CERN	KEK	Description	Done
M11	4	W2bQ2A	EH8322-		Q2A Cryogenic Heater non-lead end- wire toward cold mass mag center (CERN #2 I-)	/
M12	1	W1aQ2B	EH8332+		Q2B Cryogenic Heater lead end - wire toward cold mass end plate (CERN #1 I+)	/
M12	2	W2aQ2B	EH8332-		Q2B Cryogenic Heater lead end - wire toward cold mass mag center (CERN #1 I-)	/
M12	3	W1bQ2B	EH8342+		Q2B Cryogenic Heater non-lead end- wire toward cold mass end plate (CERN #2 I+)	/
M12	4	W2bQ2B	EH8342-		Q2B Cryogenic Heater non-lead end- wire toward cold mass mag center (CERN #2 I-)	/
M14	1	H1aQ1	YT1111+	HA1	Q1 Protection (Strip) Heater, ("a" circuit) (CERN lead #1+)	/
M14	3	H2aQ1	YT1111-	HA2	Q1Protection (Strip) Heater, ("a" circuit) (CERN lead #1-)	/
M14	5	H1bQ1	YT1121+	HB1	Q1 Protection (Strip) Heater, ("b" circuit) (CERN lead #2+)	/
M15	2	H1aQ2a	YT1112+		Q2a Protection (Strip) Heater, 1-4 & 2-3 circuit (FNAL lead A+) (CERN lead #1+)	/
M15	4	H2bQ1	YT1121-	HB2	Q1 Protection (Strip) Heater, ("b" circuit) (CERN lead #2-)	/
M16	1	H2aQ2a	YT1112-		Q2a Protection (Strip) Heater, 1-4 & 2-3 circuit (FNAL lead A-) (CERN lead #1-)	/
M16	3	H1bQ2a	YT1122+		Q2a Protection (Strip) Heater, 1-2 & 3-4 circuit (FNAL lead B+) (CERN lead#2+)	/
M16	5	H2bQ2a	YT1122-		Q2a Protection (Strip) Heater, 1-2 & 3-4 circuit (FNAL lead B-) (CERN lead #2-)	/
M17	2	H2aQ2b	YT1132-		Q2b Protection (Strip) Heater, 1-4 & 2-3 circuit (FNAL lead A-) (CERN lead #1-)	/
M17	4	H1aQ2b	YT1132+		Q2b Protection (Strip) Heater, 1-4 & 2-3 circuit (FNAL lead A+) (CERN lead #1+)	/
M18	1	H1bQ2b	YT1142+		Q2b Protection (Strip) Heater, 1-2 & 3-4 circuit (FNAL lead B+) (CERN lead#2+)	/
M18	3	H2bQ2b	YT1142-		Q2b Protection (Strip) Heater, 1-2 & 3-4 circuit (FNAL lead B-) (CERN lead #2-)	/
M20	1	TaQ1_I+	TT8311 I+		Q1 RTD, primary Wire color: Yellow	/
M20	2	TaQ1_I-	TT8311 I-		Q1 RTD, primary Wire color: Green	/
M20	3	TaQ1_V+	TT8311 U+		Q1 RTD, primary Wire color: Black	/
M20	4	TaQ1_V-	TT8311 U-		Q1 RTD, primary Wire color: Red	/
M20	5	TbQ1_I+	TT8321 I+		Q1 RTD, redundant: Wire color: Yellow	/
M20	6	TbQ1_I-	TT8321 I-		Q1 RTD, redundant: Wire color: Green	/
M20	11	TbQ1_V+	TT8321 U+		Q1 RTD, redundant: Wire color: Black	/
M20	10	TbQ1_V-	TT8321 U-		Q1 RTD, redundant: Wire color: Red	/
M20	9	TaQ2a_I+	TT8312 I+		Q2a RTD, primary Wire color: Yellow	/
M20	8	TaQ2a_I-	TT8312 I-		Q2a RTD, primary Wire color: Green	/

Table 4.9

Module	Pin	Fermi	CERN	KEK	Description	Done
M20	7	TaQ2a_V+	TT8312 U+		Q2a RTD, primary Wire color: Black	✓
M20	12	TaQ2a_V-	TT8312 U-		Q2a RTD, primary Wire color: Red	✓
M20	13	TbQ2a_I+	TT8322 I+		Q2a RTD, redundant: Wire color: Yellow	✓
M20	14	TbQ2a_I-	TT8322 I-		Q2a RTD, redundant: Wire color: Green	✓
M20	15	TbQ2a_V+	TT8322 U+		Q2a RTD, redundant: Wire color: Black	✓
M20	16	TbQ2a_V-	TT8322 U-		Q2a RTD, redundant: Wire color: Red	✓
M21	1	TaQ2b_I+	TT8332 I+		Q2b RTD, primary Wire color: Yellow	✓
M21	2	TaQ2b_I-	TT8332 I-		Q2b RTD, primary Wire color: Green	✓
M21	3	TaQ2b_V+	TT8332 U+		Q2b RTD, primary Wire color: Black	✓
M21	4	TaQ2b_V-	TT8332 U-		Q2b RTD, primary Wire color: Red	✓
M21	5	TbQ2b_I+	TT8342 I+		Q2b RTD, redundant: Wire color: Yellow	✓
M21	6	TbQ2b_I-	TT8342 I-		Q2b RTD, redundant: Wire color: Green	✓
M21	11	TbQ2b_V+	TT8342 U+		Q2b RTD, redundant: Wire color: Black	✓
M21	10	TbQ2b_V-	TT8342 U-		Q2b RTD, redundant: Wire color: Red	✓

O. Fuan
Technician(s)

2/23/06
Date

STOP

Andy Hess
Responsible Authority/Physicist

23-FEB-2006
Date

STOP

4.10 Does Magnet require Hipotential Testing?

☒ YES, HIPOT REQUIRED, Proceed to Step 4.12.

Maximum Voltage: 1500

☐ NO, HIPOT NOT REQUIRED, Proceed to Step 7.0.

Responsible Authority/Physicist — Date: 23-FEB-2006

4.11 Hipot according to table below. Hipot to value recorded in Step 4.10. Maximum leakage is 3μA.

STOP

Have Crew Chief verify setup and sign below before continuing.

Crew Chief — Date: 2-23-06

Hipot Heaters to Coil and Ground.			
High Potential	**Grounded**	**Floating**	**Leakage**
All Strip Heaters	Magnet Coils, Corrector Coils, Yoke, RTD's and Warm-up Heaters	Nothing	113 nA

Hipot Coil to Heaters and Ground			
High Potential	**Grounded**	**Floating**	**Leakage**
All Magnet Coils	Corrector Coils, Strip Heaters, Yoke, RTD's and Warm-up Heaters	Nothing	723 nA

Technician(s) — Date: 2/23/06

STOP

Responsible Authority/Physicist — Date: 23 FEB 2006

4.12 At the Non-IP End, insulate the two 8Ka Bus Leads and the two 5Ka Bus Leads using approved methods.

Note(s):

These leads must be insulated using approved methods (refer to ME-369900), first as an individual lead, then insulated as pairs to prevent 'shorting' to the other leads

Technician(s) _____ Date 2/23/06

4.13 Label the Leads "A" and "B" as per Figure 4.13-A below.

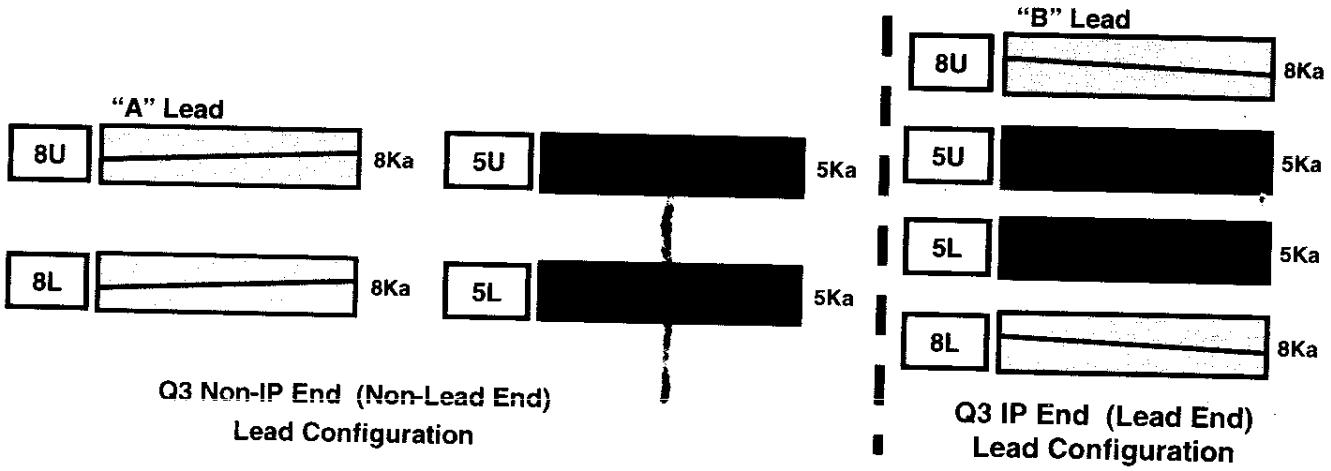

Figure 4.13-A

Technician(s) _____ Date 2/23/06

4.14 At the Non-IP End, insulate the magnet leads using ¾" Black Shrink Tubing (MA-318797). Ensure that the entire length of magnet leads are covered before heat shrinking.

Technician(s) _____ Date 2/23/06

4.15 At the IP End, insulate the two 8Ka Bus Leads and the two 5Ka Bus Leads using approved methods.

Note(s):

These leads must be insulated using approved methods (refer to ME-369900), first as an individual lead, then insulated as pairs to prevent 'shorting' to the other leads

Technician(s) _____ Date 2/23/06

4.16 At the IP End, insulate the magnet leads using ¾" Black Shrink Tubing (MA-318797). Ensure that the entire length of magnet leads are covered before heat shrinking.

Technician(s) _____ Date 2/23/06

5.0 Magnet End Preparation (Non IP End)

5.1 Separate, identify, and label the Non-IP Magnet End Corrector leads as per (ME-369900 (sheet 4 of 5)) and figure 5.2-A below (Next Step).

Technician(s) _____ Date 2/27/06

5.2 Locate and identify the two 8KA Bus Leads and the two 5KA Bus Leads.

STOP

Have Crew Chief verify setup and sign below before continuing.

Crew Chief _____ Date 1/27/06

Corrector Bus Leads

	V3A	V3B	H3A	H3B	B3A	B3B	B6A	B6B	
	V2A	V2B	H2A	H2B	B4A	B4B	A4A	A4B	
	V1A	V1B	H1A	H1B	A2A	A2B	A3A	A3B	

(View Looking from DFBX into Q3)

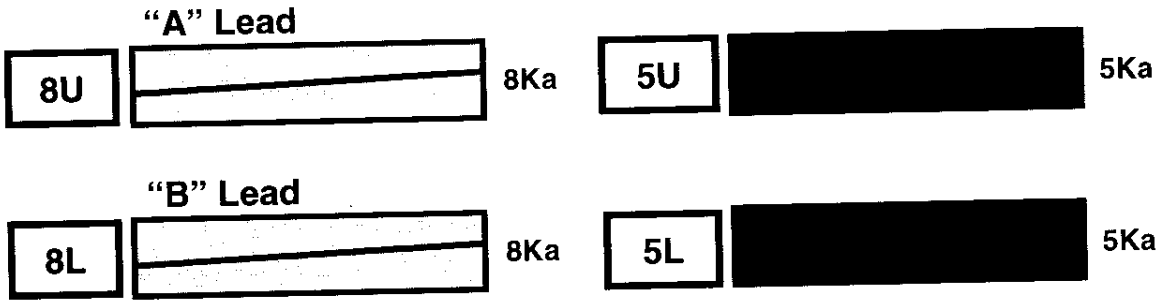

Q3 Non-IP End (Non-Lead End)
Lead Configuration

Figure 5.2-A

Technician(s) _____ Date 2/27/06

5.3 At the Non-IP End, move leads back and forth to ensure that the leads have sufficient travel for thermal expansion. Leads should have travel shown in figure below. From inside the bellows, measure from the outer edge of the Bellows to Tube adapter ring inward toward the magnet center.

Note(s):

Protect the Bellows during all stages of production.

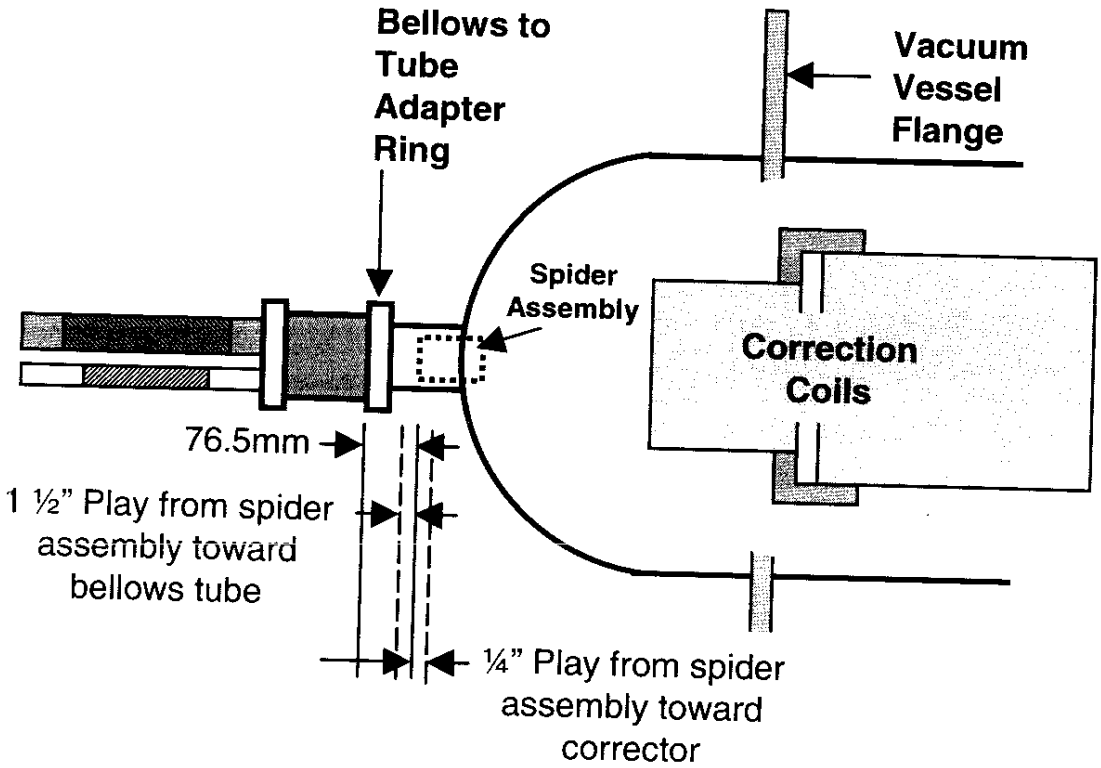

Non-IP End of Q3

Figure 5.3-A

OK 1/a (RB)

Record Travel Distance: 1 5/8

Technician(s)

Date 2/27/06

STOP

5.4 At the Non-IP End, ensure the conductor and Spider assembly are in the "set" position (76.5mm) before taking measurement for step 5.5.

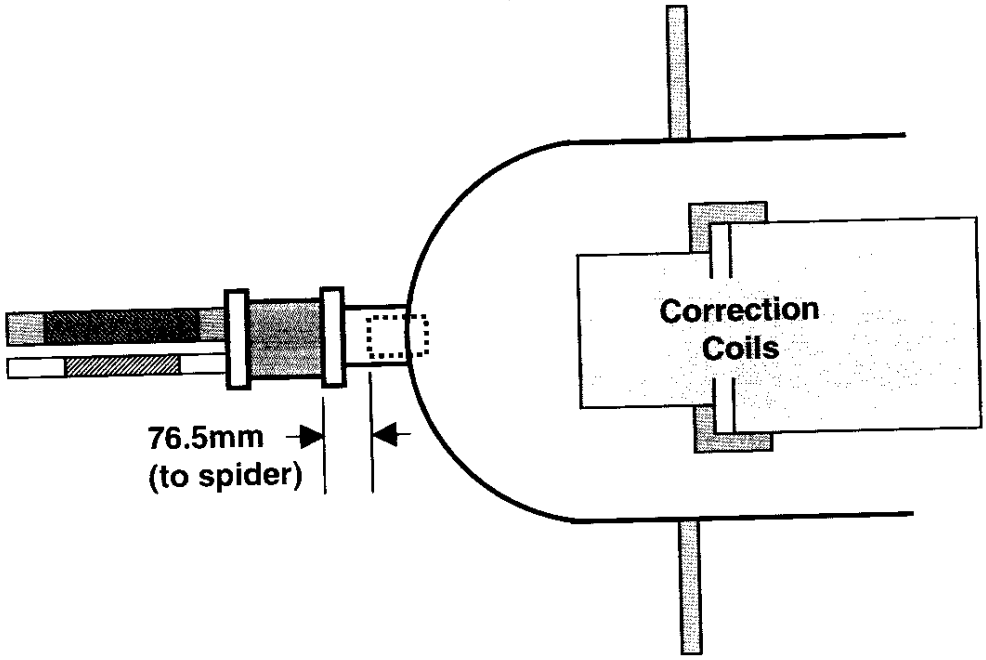

Non-IP End of Q3

Figure 5.4-A

Crew Chief

2/27/06
Date

5.5 At the Non-IP End, measure and record the length of the conductor (in mm) from the 'flat' of the magnet dome to the end of the conductor and record in the box provided below. (+/- 10mm)

Note(s):

The 740 mm dimension for the magnet leads includes an approximate 30 mm of extra buffer cable for installation tolerances.

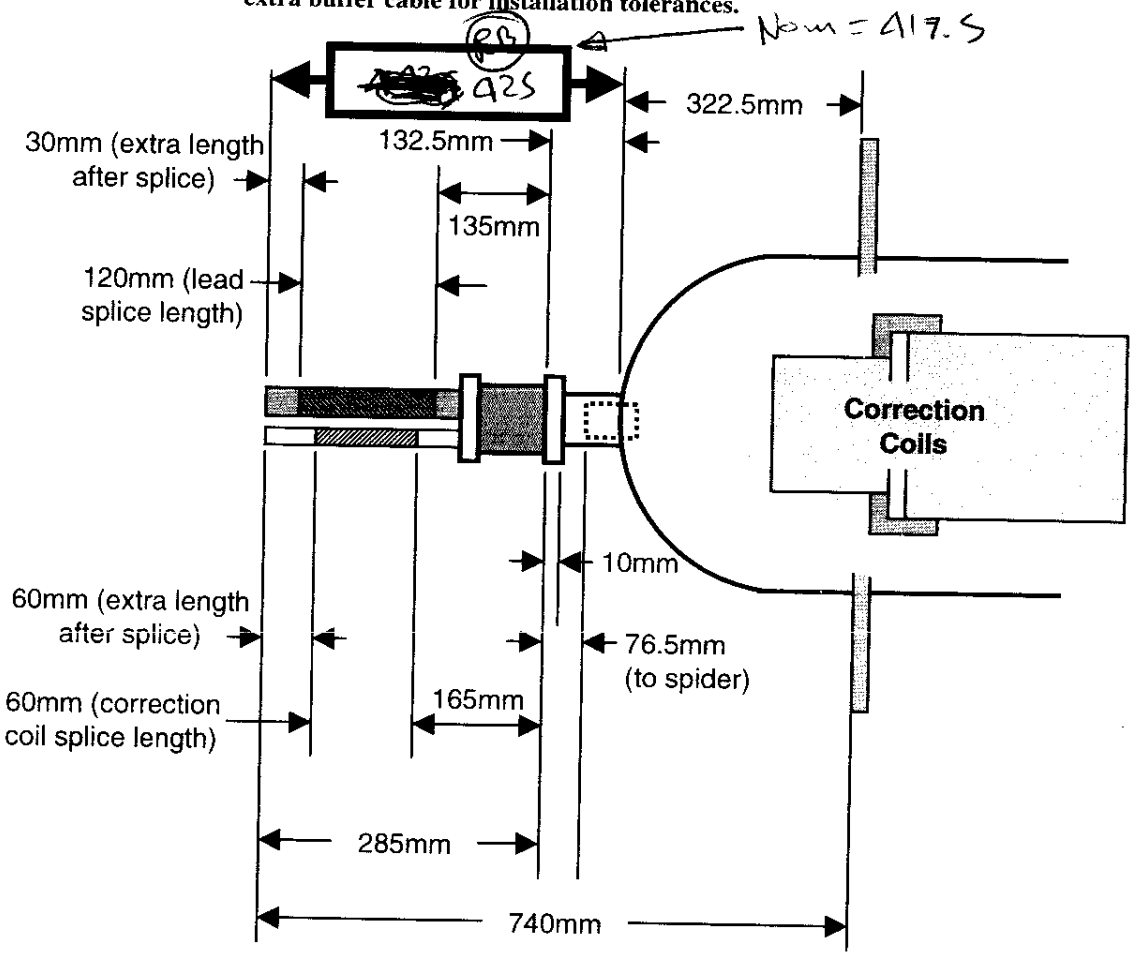

Non-IP End of Q3

Figure 5.5-A

Technician(s) _____ Date 2/27/06

STOP

5.6 Verify Step 5.3 (Spider Assembly measurement) and 5.5 (Conductor measurement) are acceptable.

Responsible Authority/Physicists _____ Date 2-27-06

6.0 Magnet End Preparation (IP End)

6.1 Separate, identify, and label the IP Magnet End Corrector leads as per (ME-369900 (sheet 4 of 5)) and figure 6.2-A below (Next Step).

Technician(s) _____ Date _____

6.2 Locate and identify the two 8KA Bus Leads and the two 5KA Bus Leads.

STOP

Have Crew Chief verify setup and sign below before continuing.

Crew Chief _____ Date 3/3/06

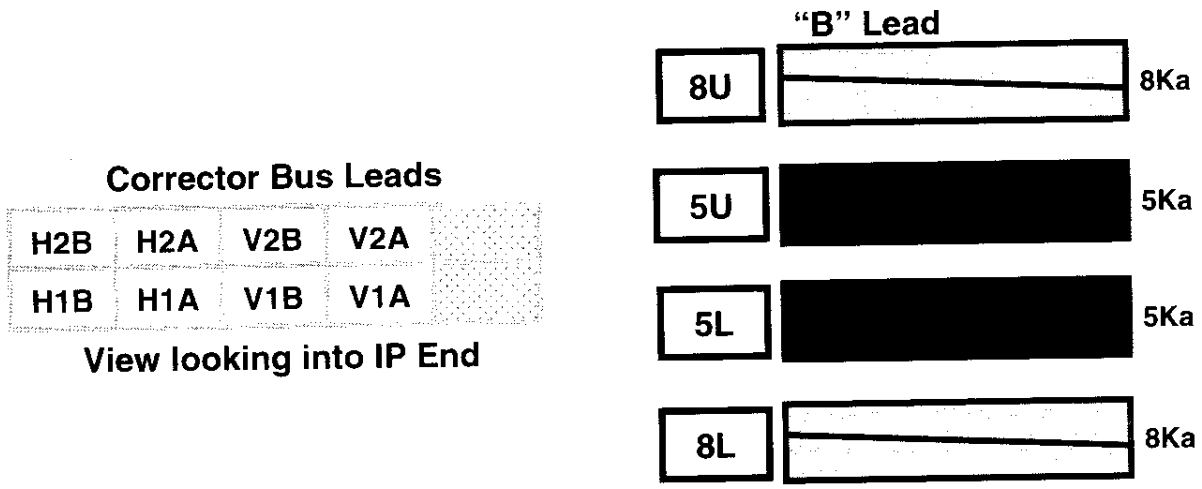

Q3 IP End (Lead End)
Lead Configuration

Figure 6.2-A

Technician(s) _____ Date 2/27/06

6.3 At the IP End, move leads back and forth to ensure that the leads have sufficient travel for thermal expansion. Leads should have travel shown in figure below.
Measure from the outer edge of the End Tube Ring inward toward the magnet center.

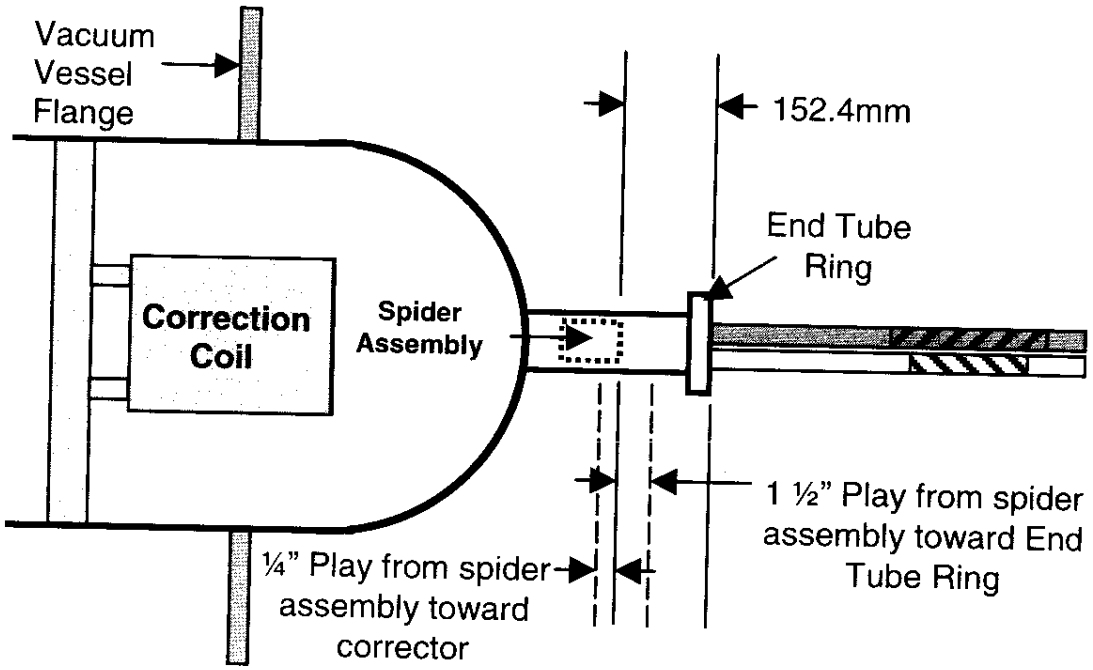

IP End of Q3

Figure 6.3-A

Record Travel Distance: ← ½ 1¾" → OK (RB)

[signature]
Technician(s)

2/27/06
Date

STOP

6.4 At the IP End, ensure the conductor and Spider assembly are in the "set" position (152.4mm, see fig. below.) before taking measurement for step 6.5.

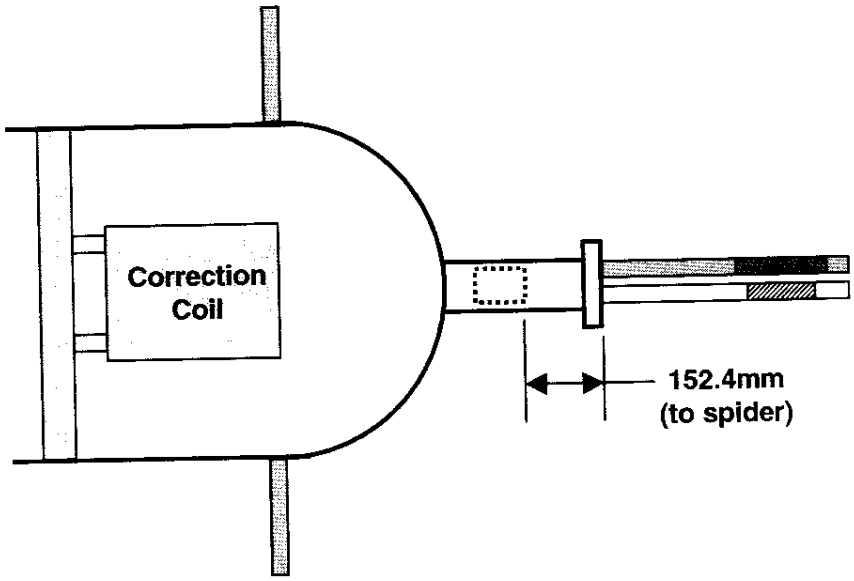

IP End of Q3

Figure 6.4-A

SNG

Crew Chief

2-27-06
Date

6.5 At the IP End, measure and record the length of the conductor (in mm) from the 'flat' of the magnet dome to the end of the conductor and record in the box provided below. (+/- 10mm)

Note(s):

The 1540 mm dimension for the magnet leads includes an approximate 30 mm of extra buffer cable for installation tolerances.

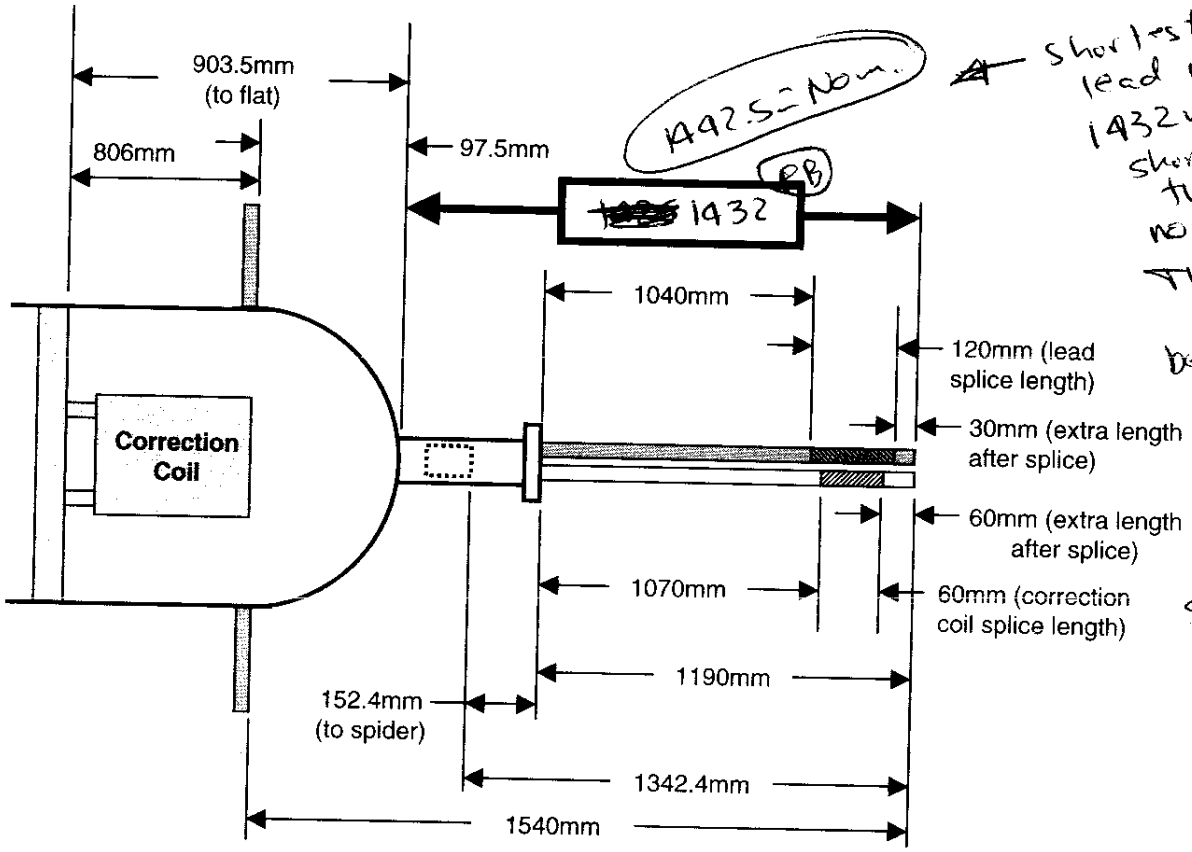

1432.5 = Nom.

Shortest lead is 1432 mm, 10mm shorter than nominal. This is OK, because there is a 30 mm "buffer". So the lead is still 20 mm longer than needed. RB

IP End of Q3
Figure 6.5-A

Technician(s) _____ Date 2/27/06

STOP

6.6 Verify Step 6.3 (Spider Assembly measurement) and 6.5 (Conductor measurement) are acceptable.

Responsible Authority/Physicists _____ Date 2-27-06

7.0 Shipping Preparation

7.1 Install Electrical Bus Shipping Restraint Assembly (MD-390748).

Note(s):
Magnet wires must be inserted into the Shipping Restraint Assembly during installation.

Note(s):
Shipping Restraint Assembly is to be dry fit assembled, NOT GLUED!!!

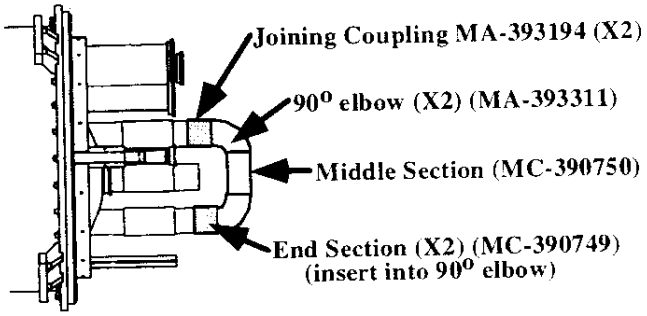

IP Magnet End
Side View

Technician(s) _____ Date 3 4 06

7.2 Install the Bellows End Sliding Flange Assembly (ME-390021) and the Fixed End Flange (ME-390020) using Bolts on both the Non-IP and IP Magnet Ends.

Note(s):
Protect the Bellows during all stages of production.

Technician(s) _____ Date 3 4 06

7.3 Acquire Q1/Q3 Shipping Restraint Assemblies (ME-390250)(2 ea).

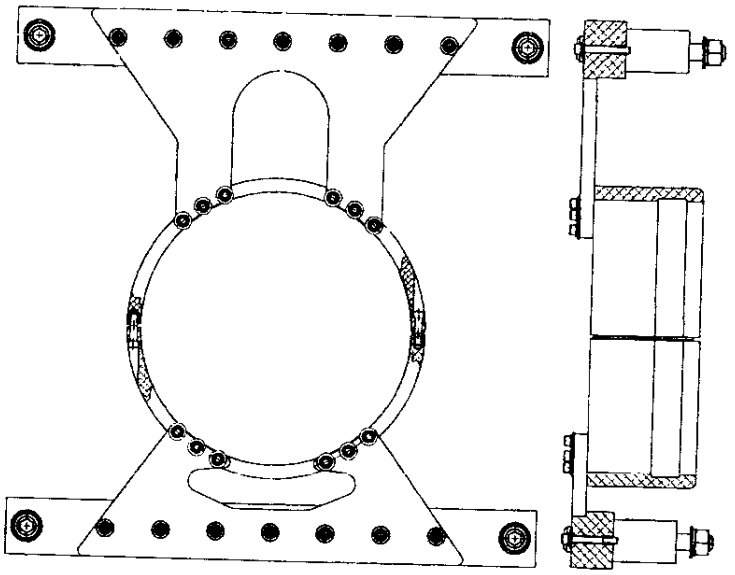

Q1/Q3 Shipping Restraint
End View
ME-390250

Q1/Q3 Shipping Restraint
Side View
ME-390250

O. Fiorz
Technician(s)

3 8 06
Date

7.4 Install the Shipping Restraint on the Non- IP Magnet end.

Note(s):
Installation Shipping Restraint bolts should be only finger tight until complete assembly is installed.

7.4.1 Install Cold Mass Collar (ME-390202) and secure using Socket Head Cap Screws (MA-393191), Plain Washers (MA-393060) and Lock Washers (MA-393061) per Q3 Shipping Restraint Assembly (ME-390250).

7.4.2 Install Upper Support Cross Bar (MD-390238)(1 ea) with Spacer Bushing (MB-390577) (2 ea) using Bolt (MA-393183 (2 ea), Lock Washer (MA-393186) (4 ea), Plain Washer (MA-393185) (4 ea), and Nut (MA-393184)(2 ea).

7.4.3 Install Lower Support Cross Bar (MD-390238)(1 ea) with Spacer Bushing (MB-390577) (2 ea) using Bolt (MA-393183 (2 ea), Lock Washer (MA-393186) (4 ea), Plain Washer (MA-393185) (4 ea), and Nut (MA-393184)(2 ea).

7.4.4 Install the Upper Bridge (ME-390240) to the Upper Support Bar using Bolt (MA-393187) (7 ea), Lock Washer (MA-393061) (7ea), and Flat Washer (MA-393060) (7ea).

7.4.5 Install the Lower Bridge (ME-390241) to the Lower Support Bar using Bolt (MA-393187) (7 ea), Lock Washer (MA-393061) (7ea), and Flat Washer (MA-393060) (7ea).

7.4.6 Secure Upper Bridge to Cold Mass Collar with Bolt (MA-393191) (6 ea), Lock Washer (MA-393061) (6 ea), and Plain Washer (MA-393060) (6 ea).

7.4.7 Secure Upper Bridge to Cold Mass Collar with Bolt (MA-393191) (6 ea), Lock Washer (MA-393061) (6 ea), and Plain Washer (MA-393060) (6 ea).

7.4.8 Tighten all the Shipping Restraint Bolts.

C. Fumay
Technician(s)

3 8 06
Date

7.5 Install the Shipping Restraint on the IP Magnet end.

Note(s):

Installation Shipping Restraint bolts should be only finger tight until complete assembly is installed.

7.5.1 Install Cold Mass Collar (ME-390202) and secure using Socket Head Cap Screws (MA-393191), Plain Washers (MA-393060) and Lock Washers (MA-393061) per Q3 Shipping Restraint Assembly (ME-390250).

7.5.2 Install Upper Support Cross Bar (MD-390238)(1 ea) with Spacer Bushing (MB-390577) (2 ea) using Bolt (MA-393183 (2 ea), Lock Washer (MA-393186) (4 ea), Plain Washer (MA-393185) (4 ea), and Nut (MA-393184)(2 ea).

7.5.3 Install Lower Support Cross Bar (MD-390238)(1 ea) with Spacer Bushing (MB-390577) (2 ea) using Bolt (MA-393183 (2 ea), Lock Washer (MA-393186) (4 ea), Plain Washer (MA-393185) (4 ea), and Nut (MA-393184)(2 ea).

7.5.4 Install the Upper Bridge (ME-390240) to the Upper Support Bar using Bolt (MA-393187) (7 ea), Lock Washer (MA-393061) (7ea), and Flat Washer (MA-393060) (7ea).

7.5.5 Install the Lower Bridge (ME-390241) to the Lower Support Bar using Bolt (MA-393187) (7 ea), Lock Washer (MA-393061) (7ea), and Flat Washer (MA-393060) (7ea).

7.5.6 Secure Upper Bridge to Cold Mass Collar with Bolt (MA-393191) (6 ea), Lock Washer (MA-393061) (6 ea), and Plain Washer (MA-393060) (6 ea).

7.5.7 Secure Upper Bridge to Cold Mass Collar with Bolt (MA-393191) (6 ea), Lock Washer (MA-393061) (6 ea), and Plain Washer (MA-393060) (6 ea).

7.5.8 Tighten all the Shipping Restraint Bolts.

O. Friar
Technician(s)

3 8 06
Date

7.6 Install Electrical Bus Shipping Restraint Short End Cover (MD-390752) into Lower Cold Mass Pipe to protect the Buss Wire.

C. Friary — Technician(s) 3/8/06 — Date

7.7 Install Protective End onto PVC Bus Protector Tube.

C. Friary — Technician(s) 3/8/06 — Date

7.8 Secure bellows with Bellow Restraint/Protective Cover (MA-390153) using Screws (MA-390180).

Note(s):

Protect the Bellows during all stages of production.

C. Friary — Technician(s) 3/8/06 — Date

7.9 Install the Vinyl Flange Covers (MA-390491), (MA-390492), (MA-390493), (MA-390494), & the Alignment Fiducial Covers (MA-390495).

C. Friary — Technician(s) 3/8/06 — Date

7.10 Are Accelerometers (Shock Recorders) available for installation?

☒ **Yes - Install Accelerometers as per Responsible Authority and Figure 7.10-A below.**

☐ **No - Accelerometers are <u>NOT</u> available for installation.**

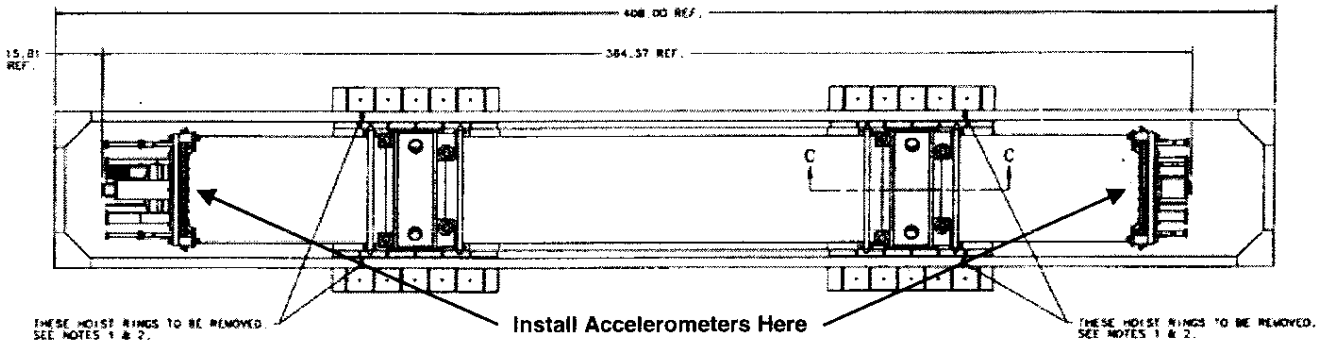

Figure 7.10-A

Technician(s) _____ Date 3 9 06

7.11 Install Magnet Identification Labels as per Q3 Identification Labeling Layout (ME-390762).

Example:

If Serial No. at bottom of Traveler is: LQXC02

Stencil Serial No. should be: HCLQXC_001-FL000002

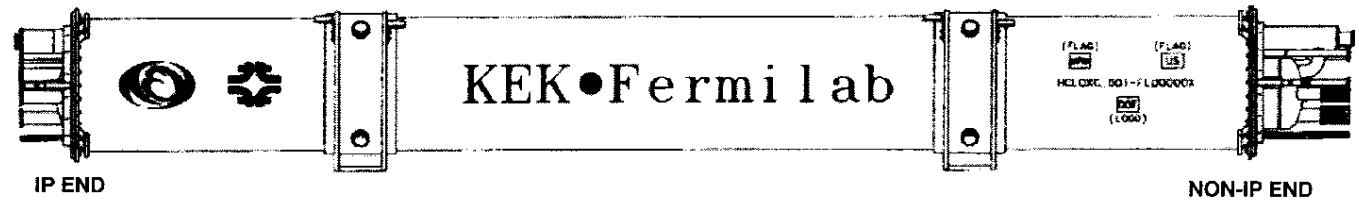

OPPOSITE SIDE VIEW

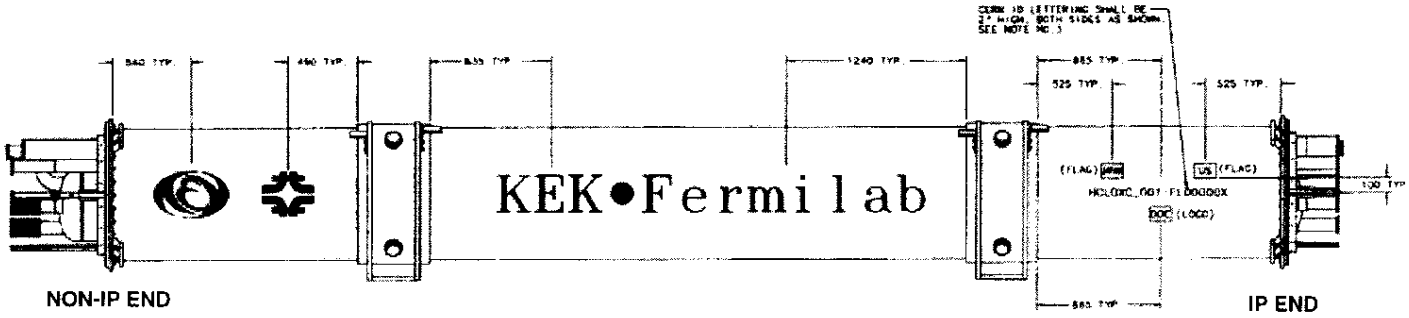

Q3 IDENTIFICATION LABELING LAYOUT (ME-390762)

Bill R.

Technician(s) _____ Date 3/4/06

7.12 Verify Magnet has been properly labeled/stenciled, and serial number matches the bottom of this traveler and as per (ME-390762).

Example:

If Serial No. at bottom of Traveler is: LQXC02

Stencil Serial No. should be: HCLQXC_001-FL000002

Lead Person _____ Date 3/11/06

8.0 Final Inspection/Installation

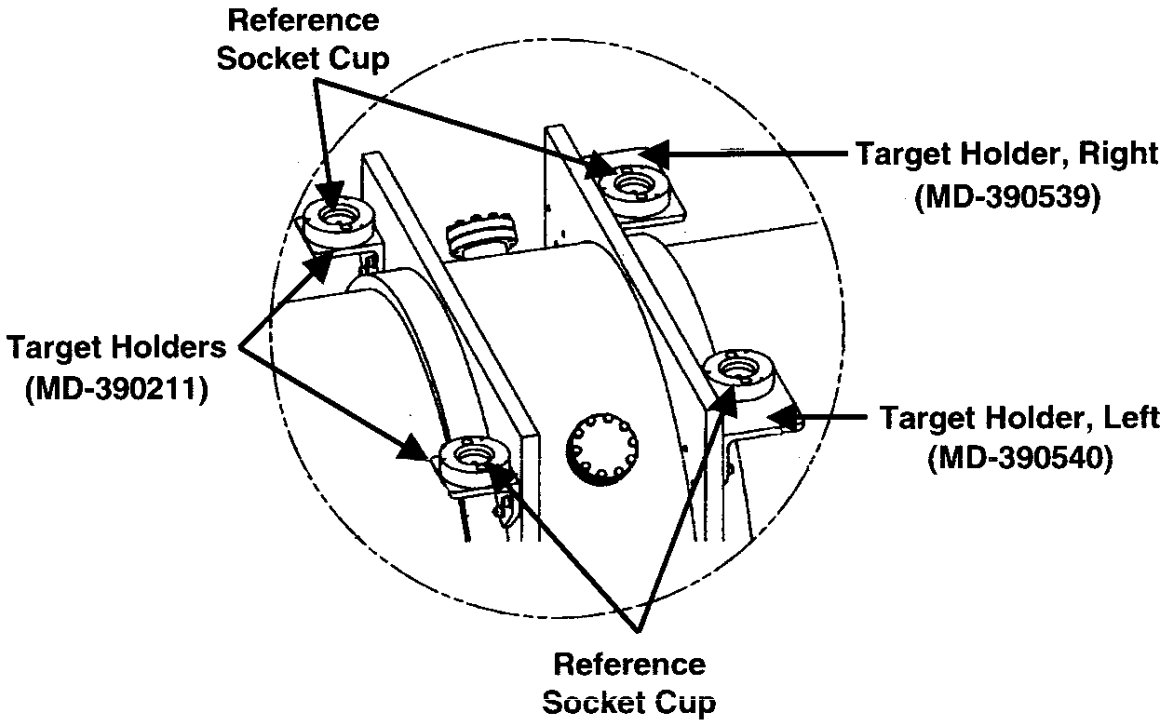

STOP

8.1 Verify Target Holder (MD-390211) (4 ea), Target Holder, Right (MD-390539) (2 ea), and Target Holder, Left (MD-390540) (2 ea) with Reference Socket Cup (MA-390426) (8 ea) and Protective Covers (MA-390495) are installed.

Lead Person _____ Date 3/11/06

STOP

8.2 Verify that the Target Holder had been pinned using Spring Pins (MA-393048) as per Q3 Cryostat General Assembly (ME-390132).

Lead Person _____ Date 3/11/06

9.0 Shipping the Magnet

☒ **Check box if shipping frame is installed in Shipping Container. Proceed to STEP 10.0.**

☐ **Check box if Shipping Frame is NOT installed already installed in a Shipping Container. Proceed to STEP 9.1**

Lead Person _____ Date _____

9.1 Acquire the Shipping Frame Assembly (ME-390729).

Technician(s) _____ Date _____

9.2 Verify that Frame Separator Bars are installed on the Shipping Frame Assembly. Refer to Q1/Q3 and Q2 Fixture Return Shipping Assembly (ME-390798).

☐ **Not Installed, proceed to Step 9.3. Verify Separator Bars are Ordered via Parts Kit. Contact Process Engineering Traveler Coordinator.**

☐ **Installed on Shipping Frame Assembly, Proceed to Step 9.4.**

Technician(s) _____ Date _____

9.3 Acquire and install the following parts.

Separator Bars	ME-390797	3 ea
Screw ½" – 13 X 3.5" l	MA-393384	6 ea
Washer, Flat ½"	MA-393325	6 ea
Washer, Bevel ½"	MA-393385	6 ea
Hex Nut ½" - 13	MA-393298	6 ea

Note(s):

Ensure Q2 to Q1/Q3 Hardware is also acquired/installed for usage by CERN:

Screw ¾" -10 x 3.5"	MA-393386	4 ea	Installed on two end Separator Bars
Washer Flat ¾"	MA-393323	4 ea	Installed on two end Separator Bars
Hex Nut ¾"- 10	MA-393387	4 ea	Installed on two end Separator Bars
Screw 1"-8 x 4" long	MA-393388	2 ea	Installed on center Separator Bar
Washer Flat 1"	MA-393389	2 ea	Installed on center Separator Bar
Hex Nut 1"-8	MA-393390	2 ea	Installed on center Separator Bar

Technician(s) _____ Date _____

9.4 Acquire the following shipping hardware:

Eyebolt	McMaster-Carr 3016T87	4 ea
Eyebolt	McMaster-Carr 3016T85	4 ea
Hex Nut	MA-393327	16 ea
Flat Washer	MA-393328	8 ea
Lock Washer	MA-393329	8 ea
Chain w/2 Hooks	MA-390702	4 ea
Mounting Bolts	MA-393321	6 ea
Flat Washer	MA-393323	6 ea
Lock Washer	MA-393322	6 ea

Technician(s) _____ Date _____

9.5 Remove the Hoist Rings (4 Total) from the Outer Frame as per Q3 Magnet Shipping Assembly (ME-390728).

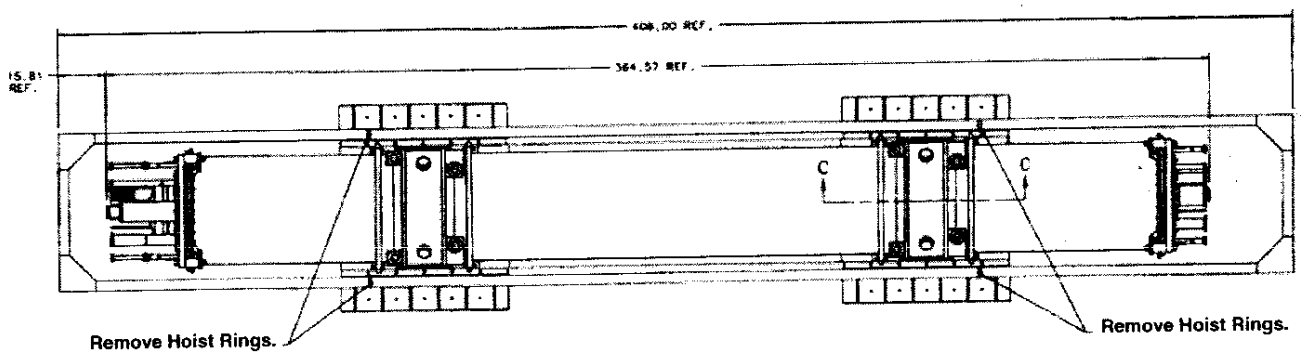

Technician(s) _____ Date _____

9.6 Transport the Q3 Shipping Fixture (ME-390729) and install into the Shipping Container using approved methods.

Technician(s) _____ Date _____

10.0 Magnet to Shipping Frame/Platform Installation

10.1 Transport the magnet to the Magnet Shipping Fixture and install using Bolt (MA-393321)(6 ea), Flat Washer (MA-393323)(6 ea), and Lock Washer (MA-393322)(6 ea).

Note(s):

Apply a small amount of Anti-Seize to all of the bolt threads prior to installing the bolts.

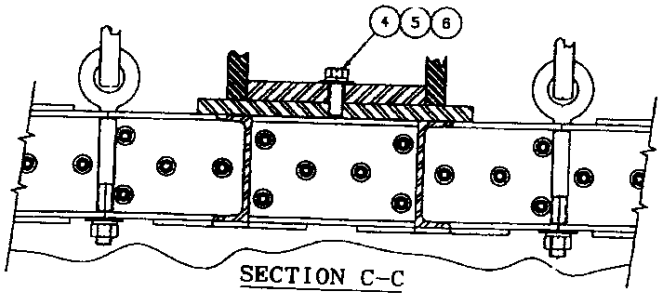

Q3 Magnet Shipping Assembly
(ME-390728)

Technician(s) _____ Date 3/11/06

10.2 Install Eyebolts, McMaster-Carr #3016T85 (4 ea), Eyebolts, McMaster Carr #3016T87 (4 ea), Flat Washer (MA-393328) (8 ea), and Lock Washer (MA-393329) (8 ea) into Shipping Fixture.

Note(s):

Install all Eyebolts #3016T85 on one side of the shipping fixture. Eyebolts #3016T87 go on the opposite side.

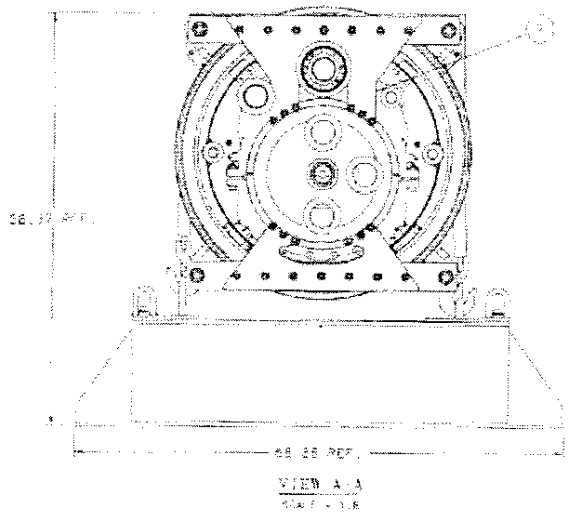

Q3 Shipping Assembly - End View

Technician(s) _____ Date 3/11/06

10.3 Install the Lift All Pukka Wear Pad Protectors (MA-393345) onto magnet prior to installing Chain Sling.

Technician(s) _____ Date 3/11/06

10.4 Install chain sling w/2 hooks (MA-390702) (4 ea) into eyebolts.

Technician(s) _____ Date 3/11/06

10.5 Tighten eyebolts until chains are snug.

Technician(s) _____ Date 3/11/06

10.6 Install an additional nut (double nutting) on each eyebolt and tighten.

Technician(s) _____ Date 3/11/06

10.7 Wrapping of the magnet.

☐ Performed by Shipping Company, proceed to Step 10.9

☒ Performed by Fermilab, proceed to Step 10.8

Lead Person _____ Date 3/11/06

10.8 Wrap the magnet in protective material (VCI Plastic) and seal the seam using approved methods to form a protective bag.

Technician(s) _____ Date 3/11/06

10.9 Install cross braces on the top of the shipping container.

Technician(s) _____ Date 3-11-06

10.10 Install protective cover on the top of the shipping container and secure.

Technician(s) _____ Date 3/11/06

STOP

10.11 Verify the magnet, shipping frame are properly secured, and protected.

T. Ifam
Responsible Authority/designee

3/13/06
Date

STOP

10.12 Close and secure doors on the shipping container.

Crew Chief

3/14/06
Date

11.0 Documentation Update

11.1 Perform the following:

- [x] **Update DSR Keywords.**
- [x] **Location.**
- [x] **Location Verified Date.**
- [x] **Status.**
- [x] **Make entry regarding work performed.**

TD/E&F Production Supervisor/designee

3/14/06
Date

12.0 Production Complete

12.1 Process Engineering; verify that the Traveler is accurate and complete. This shall include a review of all steps to ensure that all operations have been completed and signed off. Ensure that all Discrepancy Reports, Nonconformance Reports, Repair/Rework Forms, Deviation Index and dispositions have been reviewed by the Responsible Authority for conformance before being approved.

Comments:

Process Engineering/Designee

4/14/06
Date

TD - Engineering Fabri[illegible]ion Component Kit List

Process Engineering

Component Serial No.: LQXC07
Kit submitted by: Bob Jensen | 3173
Fermi ID No.: 315
Date submitted: 9-Jan-06
Need date: 17-Jan-06
Deliver to: ICB
Use with Traveler No.: 333731
Job No.: 389
M&S task number: 300 | 1.1.1.3.4
Drawing Title: Q3 MAGNET SHIPPING ASSEMBLY
Drawing No.: ME-390710 | Rev. A

Material Control
Parts available

Verified by: M. Schmidt
Fermi ID No.: 04223N
Date submitted to stockroom: 9-Jan-06

RECEIVED
JAN 10 2006
MATERIAL CONTROL /IB4

Parts issued

Issued by: [illegible]
Fermi ID No.: 12742
Date issued: 1-13-06
Parts received by E&F: Bob [illegible]
Fermi ID No.: 0315
Date received by E&F: 1/13/06

	Description	Dwg Size	Number	Rev	Unit	Quantity Required	Location	Quantity Issued	E&F Verified	Routing Form Number	Spares Number / Comment
1	KAPTON TAPE	MA	106723	A	EA	A/R					
2	¾" BLACK SHRINK TUBING	MA	318797	A	EA	A/R					
3	Q3 CRYOSTAT GENERAL ASSEMBLY	ME	390132	G	EA	ICB HAS					
4	BELLOWS PROTECTORS	MA	390153	*	EA	6	R7,2,2	6	✓	79773	40 pcs.
5	Q1/Q3 SHIPPING RESTRAINT ASSEMBLY	ME	390250	A	EA	2	ICB Has				In Container
6	CHAIN SLING W/ 2 HOOKS	MA	390702	*	EA	4	ICB Has				In Container
7	Q1/Q3 SHIPPING FIXTURE	ME	390729	*	EA	ICB HAS					
8	ELECTRICAL BUS SHIPPING RESTRAINT ASSEMBLY	MD	390748	*	EA	1	R7,3,4	1	✓	81801	6 pcs.
9	ELECTRICAL BUS SHORT END COVER	MD	390752	*	EA	1	R7,3,4	1	✓	81802	7 pcs.
10	SCREWS	MA	393180	*	EA	18	23B2	18	✓	79631	133 pcs.
11	3/4-10 HEX HD. BOLT x 2.50 LG. - GR. 8 STL.	MA	393321	*	EA	6	ICB Has				In Container
12	3/4 LOCK WASHER - STL.	MA	393322	*	EA	6	ICB Has				In Container

TD - Engineering Fabrication Component Kit List

	Description	Dwg Size	Number	Rev	Unit	Quantity Required	Location	Quantity Issued	E&F Verified	Routing Form Number	Spares Number / Comment
13	3/4 FLAT WASHER - STL.	MA	393323	*	EA	6	ICB Has				In Container
14	1"-8 HEX NUT - STL.	MA	393327	*	EA	16	ICB Has				In Container
15	1" FLAT WASHER - STL.	MA	393328	*	EA	8	ICB Has				In Container
16	1" LOCK WASHER - STL.	MA	393329	*	EA	8	ICB Has				In Container
17	LIFT ALL PUKKA WEAR PAD PROTECTORS	MA	393345	*	EA	4	ICB Has				In Container
18	EYEBOLT - 1"-8 x 12" LG.		390731-11	*	EA	4	ICB Has				In Container
19	EYEBOLT - 1"-8 x 9" LG.		390731-7	*	EA	4	ICB Has				In Container
20	ANTI-SEIZE			*	EA	A/R					
21	ACCELEROMETER			*	EA	ICB HAS					