Document ID:

8462

LHC Q3 LMQXC Module Assembly Traveler

333729 / Rev. F

Job No:	**389**
MSD Project/Task No.:	**300/1.1.1.6.3**
M + S Project/Task No.:	**300/1.1.1.6.3**

Place This Side Down For Scanning!!!

Magnet Travelers

LMQXC09-0

Document ID:

8462

Job No.:

389

Project/Task No.

300/1.1.1.6.3

Series:

LQXC

Serial No:

LMQXC09

Rework ID:

0

Specification No.:

333729

Revision:

F

LMQXC09-0

Fermi National Accelerator Laboratory
Batavia, IL 60510

LARGE HADRON COLLIDER
Q3 - LMQXC
COLD MASS MODULE ASSEMBLY TRAVELER

Reference Drawing(s):
Q3 Cold Mass Welded Assembly (ME-390529)
Q3 Module Assembly (ME-369900)

Project/Task Number: *300/1.1.1.6.3*

Released By: *Bob Jensen* **Magnet/Device Series:** *LQXC*

Date Issued: *1/12/2006 8:57:14 AM* **Scanned Pages:** 198

Prepared by: J. Szostak

Title	Signature	Date
TD / E&F Process Engineering	*Bob Jensen* Bob Jensen / Designee	*11/7/05*
TD / LHC Production Supervisor	*Steve Gould* Jim Rife / Designee	*11/7/05*
TD / LHC Production Engineer	*Rodger Bossert* Rodger Bossert / Designee	*11/7/05*
TD / LHC Project Engineer Cryostat	*Tom Nicol* Tom Nicol / Designee	*11/7/05*
TD / LHC Project Physicist	*Andy Hocker* Andy Hocker/ Designee	*11/7/05*
TD / LHC Program Manager	*Jim Kerby* Jim Kerby / Designee	*11/7/05*

Revision Page (1 of 5)

Revision	Step No.	Revision Description	TRR No.	Date
None	N/A	Initial Release	N/A	8/20/04
A	5.0	Modified Step. Modified to reflect production floor process.	1682	12/15/04
	9.2	Modified Step. Changed to Crew Chief signoff.		
	9.3	Modified Step. Changed to Weldor signoff.		
	12.3	Modified Step. Added "...and Figure 12.0."		
	15.2	Modified Step. Changed to "Using the Valhalla 4300B, connect 10mA applied voltage thru the corrector Power Leads. Measure Resistance and record in the table below." Modified Table. Added Picture of Corrector Bus Leads.		
	17.1	Modified Step. Changed (MC-369552) to (MC-369522).		
	17.4	Modified Step. Changed IP to Non-IP.		
	17.6	Modified Step. Changed IP to Non-IP.		
	17.7.2	Modified Step. Changed Non-IP to IP.		
	17.8	Modified Step. Changed Non-IP to IP.		
	17.10	Modified Step. Changed Non-IP to IP.		
	18.9	Added Step. "Tack weld the Extension Tube (MD-390667) to the Cold Mass per (ME-390529)."		
	18.11	Added Step. "Weld the Extension Tube (MD-390667) to the Cold Mass per (ME-390529)."		
	19.9	Modified Step. Changed to "Measure the distance between the Suspension Rings at the bottom of the Threaded Rods and record measurements below. Copy this page and place copy in designated book for later reference. (TR-333730, Q3 Cryostat Final Assembly, Step 5.1)."		
	19.17	Modified Step. Changed Non-IP to IP.		
	19.18	Modified Step. Removed Center – North and Center – South.		
	19.21	Removed Step. "Weld the Shielding Blocks (MB-390534) to the Cold Mass per Q3 Suspension System Installation (ME-390525)." No shielding Blocks		
	19.22	Modified Step. Added 112.5.		
	19.23	Modified Step. Added 337.5.		
	21.1	Modified Step. Modified Resistance Table.		
	21.2	Modified Step. Changed to "Using the Valhalla 4300B, connect 10mA applied voltage thru the corrector Power Leads. Measure Resistance and record in the table below." Modified Table. Added Picture of Corrector Bus Leads.		
	22.2	Added Step. Added "Assemble/Install Hypertronics Connectors, **without Cover** at **IP End** as per Q3 Module Assembly (ME-369900). Pin Numbers for connectors are shown in Table 22.2 below."		
	22.3	Added Step. "Inspect Hypertronics Connector. Ensure that it is free of flux and that Kapton has been installed properly."		
	22.4	Added Step. "After LHC Project Physicist / designee has signed the above step, complete the installation of the Hypertronics."		
	23.2	Modified Step. Changed to "Using the Valhalla 4300B, connect 10mA applied voltage thru the corrector Power Leads. Measure Resistance and record in the table below." Modified Table. Added Picture of Corrector Bus Leads.		
	23.4	Added Step. "Ensure electrical measurements are acceptable and confirm Hypertronics Connector has been installed properly."		

Revision Page (2 of 5)

Revision	Step No.	Revision Description	TRR No.	Date
B	1.6	Added Step. "Protect the bellows during all stages of production." **DR No. HGQ-0500.**	1695	3/4/05
	7.6	Removed Step. Moved to after electrical. New step 7.8.		
	7.0 to 17.0	Modified order of steps per production request. (Subsequent changes to steps will reflect new Step Numbers)		
	7.14	New step. "Splice Cold mass voltage taps to wire bundle. Verify splices electrically." Per LMQXC02.		
	7.15	New step. "Attach wires using putty and install the Voltage Tap Splice Cover Block (MC-430146)." Per LMQXC02.		
	9.5	Added Step. "Solder Corrector Wires per Q3 Module Assembly (ME-369900) and as shown in Figure 9.4-A."		
	9.6	Added Step. "Install voltage taps on MCBXA corrector leads. One tap is to be soldered to the "A" Lead of each corrector element. Wire labels are shown below."		
	11.12	Modified Step. Added check boxes and specifications for measurements taken with Mini-level.		
	12.1	Modified Step. Added picture, (ME-369900 - Rev. A, Sheet 3 of 5), per production request.		
	12.11	Added Step. "Solder MQSX Corrector Wires."		
	12.13	New Step. "At the IP End, attach Spider Assembly (MD-430072) as per Q3 Module Assembly (ME-369900)."		
	15.3	New Step. "At the Non-IP End, attach Spider Assembly (MB-430096) as per Q3 Module Assembly (ME-369900)." **Per DR No. HGQ-0520.**		
	16.2	Modified Step. Added "Record Initial resistance of Corrector Element and record below." Added column to record initial resistance of Corrector Element.		
	16.3	Added Step. "Attach Backing Splines as per Q3 Module Assembly (ME-369900)."		
	16.4	Added Step. "At the IP End (Lead End) wrap the Springboard Assemblies in Kapton and then wrap with Kevlar String (MA-369912) every ½ - ¾" over Kapton as per Q3 Module Assembly (ME-369900)."		
	16.5	Added Step. "At the Non-IP End (Non-Lead End) wrap the Springboard Assemblies in Kapton and then wrap with Kevlar String (MA-369912) every ½ - ¾" over Kapton as per Q3 Module Assembly (ME-369900)."		
	17.3	Modified Step. Moved Step per production request. "Position the Beam Tube (MC-369522) longitudinally per Q3 Cold Mass Welded Assembly (ME-390529)." New Step 20.1		
	19.2	Modified Step. Changed to "Insert the Fixed Support Assembly (ME-390041) into the Vacuum Vessel and position at the IP End."		
	19.5	Modified Step. Changed to "Insert the Sliding Support Assembly (ME-390042) in to the Vacuum Vessel and position at the Non-IP End."		
	20.8	Modified Step. Changed to "Perform a stretched wire measurement of the system to align the Beam Tube Flange within ± .5 mm."		
	21.2	New Step. "Check Q1 & Q2 Instrumentation Bus Wires for Continuity." Added Table.		
	21.3	Modified Step. Added "Record Initial resistance of Corrector Element and record below." Added column to record initial resistance of Corrector Element.		
	22.1	Modified Step. Changed Picture of "Hypertronics Connector Pin Locations (Q3 non-IP end) VIEW: Male (pin) solder cup side" to show correct hookup configuration to DFBX.		
	23.0	Modified Step. Removed electrical checks that are previously performed by MTF, per production request.		

Revision Page (3 of 5)

Revision	Step No.	Revision Description	TRR No.	Date
C	7.6	Modified Step. Modified Table. Added Column for RTD Serial Number per LHC Production Supervisor.	1721	6/8/05
	7.14	Modified Step. Added electricals performed by MTF.		
	22.3	Modified Step. Added electricals performed by MTF.		
	19.3	Modified Step. Changed to "Install the Suspension System Adjusting Screws (MB-390039) and Socket Head Cap Screws (MA-393021) into the Vacuum Vessel to hold the Fixed Support Assembly in place. Coat all screw threads with Molybdenum Disulfide prior to installation." Per production request.		
	19.6	Modified Step. Changed to "Install the Suspension System Adjusting Screws (MB-390039) and Socket Head Cap Screws (MA-393021) into the Vacuum Vessel to hold the Fixed Support Assembly in place. Coat all screw threads with Molybdenum disulfide prior to installation." Per production request.		
D	3.0	Modified Step. Changed title.	1751	7/13/05
	4.0	Added Step. Added steps per production request.		
	7.13	Removed Step. "Disassemble the MCBXA Corrector Magnet from the MCBXA Corrector Mounting Ring (ME-390037)." Per production request.		
	7.21	Removed Step. "Disassemble the MQSX Corrector Magnet from the MQSX Corrector Mounting Ring (MD-309209)." Per production request.		
	8.1	Removed Step. "Move the MQSX Corrector Magnet up against the Mounting Ring on the Q3 Cold Mass and bolt the MQSX Corrector Magnet to the Q3 Cold Mass using the Silver Plated Mounting Screw and torque bolts to 500 in.-lbs. Shim between the corrector and flange as necessary." Per production request.		
	8.2	Modified Step. Moved to after step 7.18. (New step 8.19)		
	8.4	Removed Step. "Solder Corrector Wires per Q3 Module Assembly (ME-369900) and as shown in Figure 8.5-A."		
	9.0	Changed Title to Final Corrector Preparations. per production request. (New Step 10.0.)		
	9.1	Modified Step. Removed "Move the MCBXA Corrector Magnet up against the Mounting Ring on the Q3 Magnet, and bolt the MCBXA Corrector Magnet to the Q3 Cold Mass using the 3" Silver Plated Mounting Screw (MA-390247) and " from step per production request. (New Step 10.1)		
	10.0 to 25.0	Modified Steps per production request and marked-up traveler.		

Revision Page (4 of 5)

Revision	Step No.	Revision Description	TRR No.	Date
E	3.1	Modified Step. Added location to record the **BUS** Serial Number: per Damon Bice	1766	9/14/05
	6.7	Added Step. "Verify the Bus configuration is per Drawing (ME-430065)." Per **DR No. 4208**.		
	8.8	Modified Step. Changed 2nd part to "Once all information has been filled out, make a copy of the Cryogenic Thermometer Traveller. Place the original at the end of the traveler and place the copy in the designated binder."		
	8.14	Modified Step. Changed to "**(This step is to be performed by MTF Technicians)** Identify the Voltage Tap and Heater wires to be spliced. Splice the Cold Mass Voltage Taps and Heater wires from Bundle #1 to Bundle #2 as indicated in Table 8.14-A below."		
	8.15	Modified Step. Changed to "**(This step is to be performed by MTF Technicians)** Verify the splices electrically:". Changed procedure performed by MTF.		
	10.1	Modified Step. Changed to "Route MCBXA Corrector Coil Wires as shown in Figure 10.1-A below and per Q3 Cold Mass Module Assembly (ME-369900, sheet 4 of 5)."		
	12.5	Modified Step. Added "Weld the MCBXA Corrector to the Mounting Ring per Q3 Cold Mass Welded Assembly (ME-390529)." Per Damon Bice.		
	12.6	Modified Step. Added "Weld the MCSOX Corrector to the Mounting Ring per Q3 Cold Mass Welded Assembly (ME-390529)." Per Damon Bice.		
	12.7	Modified Step. Added "Weld the MQSX Corrector to the Mounting Ring per Q3 Cold Mass Welded Assembly (ME-390529)." Per Damon Bice.		
	18.5	Modified Step. Changed to "At the Non-IP End (Non-Lead End) wrap the entire Springboard Assembly in Kapton tape <u>and then wrap the uppermost bend of magnet and corrector bus with Nomex.</u> <u>Wrap the entire springboard with white glass tape followed by</u> Kevlar String (MA-369912) every ½ - ¾" as per Q3 Module Assembly (ME-369900)."		
	20.7	Removed Step. Moved to after step 20.16, per production request. "Tack weld the IP End Dome in place at approximately 6-8 places around the Dome per Q3 Cold Mass Welded Assembly (ME-390529)." (New step 20.15)		
	20.8	Removed Step. Moved to after step 20.18, per production request. "Weld the IP End Dome, skip weld around to minimize distortion per Q3 Cold Mass Welded Assembly (ME-390529)." (New step 20.19)		
	20.8	Added Step. "Weld the Shipping Restraint Nuts (MC-390294)."		
	20.9	Modified Step. Changed to "Mark the location that the Shipping Restraint Nuts (MC-390294) will be welded on the Non-IP End." (New Step 20.7) per Damon Bice.		
	20.16	New Step. "Hipot the Cable Busses according to tables below. Hipots are done @ 3kV. Hold for 30 seconds. Maximum Leakage is 3 μA." per production request.		
	20.18	Added Step. "Hipot according to tables below."		
	21.9	Modified Step. Changed to "Measure the distance between the Suspension Rings at the bottom of the Threaded Rods (<u>Measure from the face of one stainless steel lug to the face of the other stainless steel lug</u>) and record measurements below. Copy this page and place copy in designated book for later reference. (TR-333730, Q3 Cryostat Final Assembly, Step 5.1)."		
	21.10	Modified Step. Changed to "Measure two places (**in mm**)(3 o'clock and 9 o'clock position while facing Vacuum Vessel End) from the face of the IP End Vacuum Vessel Flange to the inside surface of the IP End Suspension System's G-11. (Fixed Support)." Added Figures and extra tables to measure positions.		

Revision Page (5 of 5)

Revision	Step No.	Revision Description	TRR No.	Date
E (Continued)	21.11	Modified Step. Changed to "Measure two places (**in mm**) (3 o'clock and 9 o'clock position while facing Vacuum Vessel End) from the face of the Non-IP End Vacuum Vessel Flange to the inside surface of the Non-IP End Suspension System's G-11. (Sliding Support)." Added Figures and extra tables to measure positions.	1766 (Continued)	9/14/05
	23.4	Modified Step. Added "Maximum Leakage is 3 μA." Per LHC Project Physicist.		
	25.1	Modified Step. Removed steps and tables for measuring resistance of RTD's and Strip Heaters.		
F	7.0	Added Step. Added Electrical Inspection of the Q3 Bus assembly per production request.	1779	11/7/05
	19.0	Modified Steps. Added Step Numbers and instructions to each individual signoff.		
	24.0	Modified Steps. Added Step Numbers and instructions to each individual signoff.		
	26.0	Modified Steps. Added Step Numbers and instructions to each individual signoff.		

Ensure appropriate memos and specific instructions are placed with the traveler before issuing the sub traveler binder to production.

1.0 General Notes

1.1 All steps that require a sign-off shall include the Technician/Technician(s)s first initial and full last name.

1.2 No erasures or white out will be permitted to any documentation. All incorrectly entered data shall be corrected by placing a single line through the error, initial and date the error before adding the correct data.

1.3 All Discrepancy Reports issued shall be recorded in the left margin next to the applicable step.

1.4 Personnel shall perform all tasks in accordance with current applicable ES&H guidelines and those specified within the step.

1.5 Cover the product/assembly with Green Herculite (Fermi stock 1740-0100) when not being serviced or assembled.

1.6 Protect the Bellows during all stages of production.

2.0 Parts Kit List

2.1 Attach the completed Parts Kit for this production operation to this traveler. Ensure that the serial number on the Parts Kit matches the serial number of this traveler. Verify that the Parts Kit received is complete.

Process Engineering/Designee

1/13/06
Date

3.0 Q3 Module Verification

3.1 Record the serial number for each Magnetic Component Assembly.

✓Q3 Serial Number: MQXA - 19

✓ **MCBXA** Corrector Coil Serial Number: HCMCBXA-001-SI000008 ?

✓ **MQSX** Corrector Coil Serial Number: HCMQSX-001-AN00003

✓ **MCSOX** Corrector Coil Serial Number: HCMXSOX-001-AN000003

BUS Serial Number: MQXCB10

STOP

T. Page
Responsible Authority/Physicist

1/31/06
Date

3.2 Attach the Certificate of Conformity, for vendor supplied components, and the Quality Record, for vendor supplied components, to this traveler.
Verify that the Certificate of Conformity and /or the Quality Record (as required) has been filled out and performed by Fermilab personnel.

STOP

Crew Chief

1/24/06
Date

From LMQXC08! - DONE AT SAME TIME!

4.0 Corrector Pre-alignment

4.1 Set up Corrector Magnets for Pre-alignment referencing.

DAMON _____ Technician(s) 12/12/05 Date

STOP

4.2 Perform Stretched Wire Measurement of Corrector Magnets.

JOE D. _____ Responsible Authority/Physicist 11/15/05 Date

STOP

4.3 Verify Corrector Roll Angles.

TOM P. _____ Responsible Authority/Physicist 11/15/05 Date

4.4 Set-up Pre-alignment plates for welding.

DAMON _____ Technician(s) 12/12/05 Date

4.5 Weld the Pre-alignment plates to the MCBXA, MQSX AND MCSOX Correctors. (See Serial Numbers from step 3.1)

BOB W _____ Weldor(s) 12/12/05 Date

STOP

4.6 Verify that the Pre-alignment plates are positioned / welded in their proper locations and document the data.

TOM P. _____ Responsible Authority/Physicist 12/12/05 Date

5.0 Q3 Magnet Placement (Module Assembly Tooling)

5.1 Configure tooling for Q3 Cold Mass Assembly (ME-390528) per Final Cold Mass Assembly Stat – Support and Clamping Fixture (ME-369768).

Technician(s) _____ Date 1/24/06

5.2 Configure tooling for Corrector Mounting per Cold Mass / Cryostat Station Corrector Support Fixture (ME-369780), 13.780 Diameter Corrector Magnet.

Technician(s) _____ Date 1/24/06

5.3 Configure tooling for End Dome Mounting per Cold Mass Cryostat Station Final Assembly (ME-369765, View E-E).

Technician(s) _____ Date 1/24/06

5.4 Move the Q3 Cold Mass to the Cold Mass Module Assembly Tooling, placing it nearest the West End of ICB, with the Lead End of the Magnet facing west as per Q3 Cold Mass Welded Assembly (ME-390529).

Technician(s) _____ Date 1/24/06

6.0 Bus Assembly Installation

6.1 Measure the length of the Cold Mass and record below.

Cold Mass Length: 262 3/8

Technician(s) _____ Date 1/24/06

6.2 Add four feet (48 inches) to the Cold Mass Length and record below. This will be the top piece.

Cold Mass Length from step 6.1: 262 3/8

Add: + 48 in.

Length of top piece: 330 3/8

Technician(s) _____ Date 1/24/06

STOP

Crew Chief _____ Date 1/24/06

6.3 Cut a piece of Nomex (MB-430064) equal to the total length recorded in step 6.2. This will be referred to as the top piece.

Technician(s) _____ Date 1/24/06

6.4 Record the total length of the top piece, recorded in step 6.2, below. Multiply the total by 2 and record the number below. This will be the length of the bottom piece.

Length of top piece: 330 3/8

Multiply by 2: x 2

Length of bottom piece: 660 3/4

Technician(s) _____ Date 1/24/06

STOP

Crew Chief _____ Date 1/24/06

6.5 Cut a piece of Nomex (MB-430064) equal to the total length recorded in step 6.4. This will be referred to as the bottom piece.

Technician(s) _____ Date 1/24/06

6.6 Pull the two pieces of Nomex (MB-430064) through the Bus Slot. Leave two feet of Nomex extending past the end of the Cold Mass at the Lead End and Non-Lead End. Fold top piece over top of Cold Mass and fold bottom piece under bottom of Cold Mass. (As shown n figure 6.6 below)

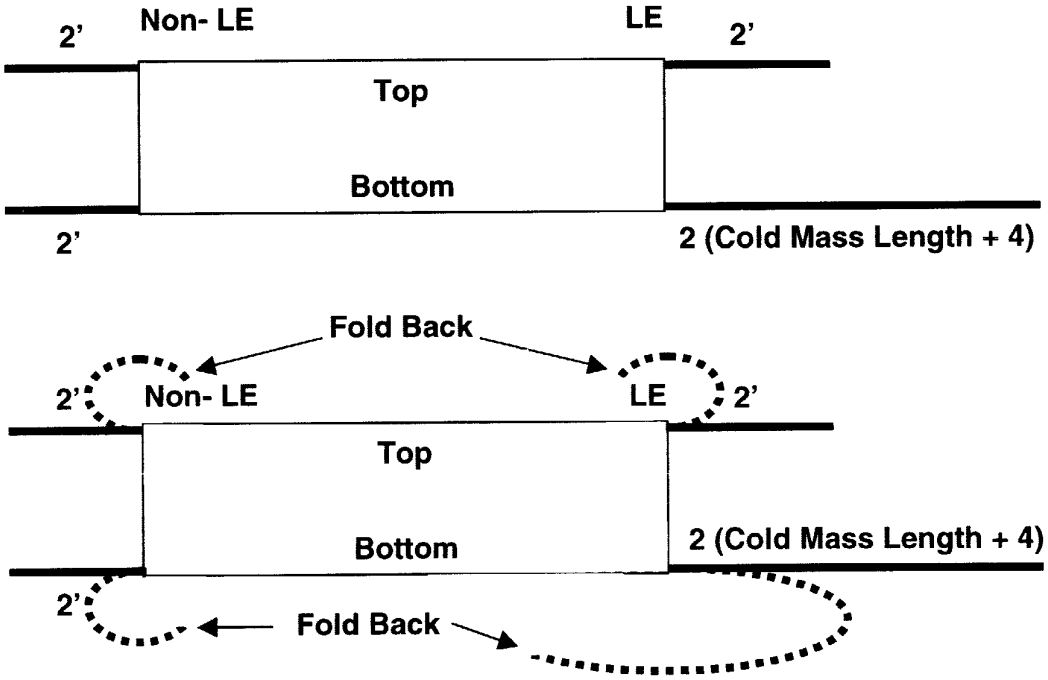

Figure 6.6

Technician(s) _____ Date 1/24/06

6.7 Verify the Bus configuration is per Drawing (ME-430065).

STOP

Crew Chief _____ Date 1/24/06

6.8 Starting at the Lead End, slide the Lead and Corrector Coil Bus Assembly (MB-430065) into Magnet Bus Slot between the two pieces of Nomex (MB-430064). The bottom piece of Nomex will move with the bus. Pull the bottom piece as it is being fed into the Cold Mass.

Technician(s) _____ Date 1/24/06

6.9 Cut Nomex (MB-430064) equal to the Length of the Cold Mass. (See Step 6.1 for reference)

Technician(s) _____ Date 1/31/06

7.0 Electrical Inspection

7.1 Perform a Resistance Measurement of the Lead & Corrector Coil Bus Assembly (MD-430065).

Lead Busses

1	2
3	4

Looking from Lead End to Non-Lead End

Settings for the Valhalla 4300B: 20 mV – 10mA

Using the Valhalla 4300B, connect 10mA (@ 20 mV) applied voltage thru the Lead Busses.

short lead

Component	Measurement
Lead Bus #1	.1062 Ω
Lead Bus #2	.0098 Ω
Lead Bus #3	.0085 Ω
Lead Bus #4	.0085 Ω

Corrector Busses

1	2	3	4	5
6	7	8	9	10
11	12	13	14	15

Looking from Lead End to Non-Lead End

Settings for the Valhalla 4300B: 2V - 1A

Using the Valhalla 4300B, connect 10mA (@ 20 mV) applied voltage thru the Lead Busses.

Component	Measurement
Corrector Bus #1	92.9 Ω
Corrector Bus #2	91.8 Ω
Corrector Bus #3	92.9 Ω
Corrector Bus #4	92.3 Ω
Corrector Bus #5	92.1 Ω
Corrector Bus #6	87.8 Ω
Corrector Bus #7	88.0 Ω
Corrector Bus #8	88.4 Ω
Corrector Bus #9	87.7 Ω
Corrector Bus #10	87.4 Ω
Corrector Bus #11	89.8 Ω
Corrector Bus #12	89.9 Ω
Corrector Bus #13	90.3 Ω
Corrector Bus #14	90.2 Ω
Corrector Bus #15	89.8 Ω

Technician(s) _____ Date 1/25/06

STOP

7.2 Verify that the Readings in Step 7.1 are acceptable.
Approved for next Major Assembly Procedure.

Responsible Authority/Physicist _____ Date 31-JAN-2006

7.3 Hipot Lead Busses to 5 kV as shown in figures 7.3-A and 7.3-B. Max Leakage is 2 μA.

STOP

Have Crew Chief verify setup and sign below before continuing.

Crew Chief _____ Date 1-25-06

Hipot - Lead Busses to each other

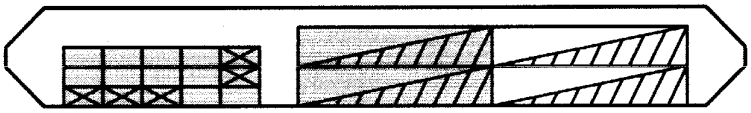

View of bus looking from Lead End to Non-Lead End

Lead Busses – Layer to Layer

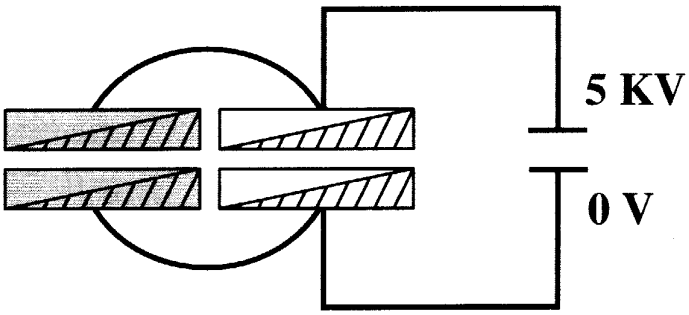

Figure 7.3-A

Measurement	Leakage (Max. 2μA)
Lead Busses - Layer to Layer	.098 uA

STOP

Have Crew Chief verify setup and sign below before continuing.

Crew Chief

1-25-06
Date

Lead Busses – Across Corners

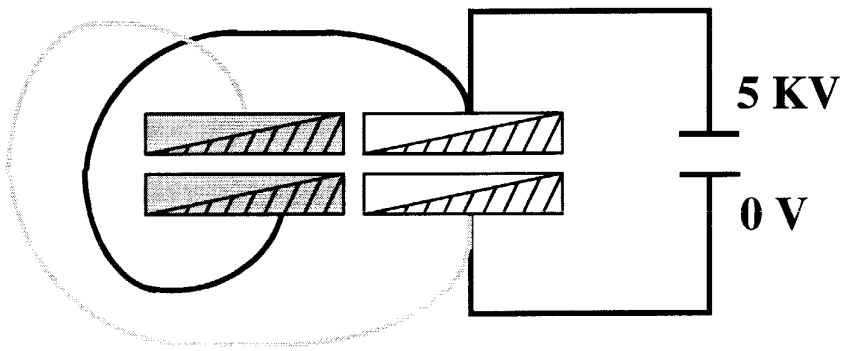

Figure 7.3-B

Measurement	Leakage (Max. 2μA)
Lead Busses - Across Corners	.179 μA

Technician(s)

1/25/06
Date

STOP

Responsible Authority/Physicist

25-JAN-2006
Date

7.4 Hipot Correction Coil Busses to 4 KV as shown in Figure 7.4-A and 7.4-B. Max Leakage is 2 μA.

STOP

Have Crew Chief verify setup and sign below before continuing.

Crew Chief _____ Date 1-25-06

Corrector Busses – Layer to Layer

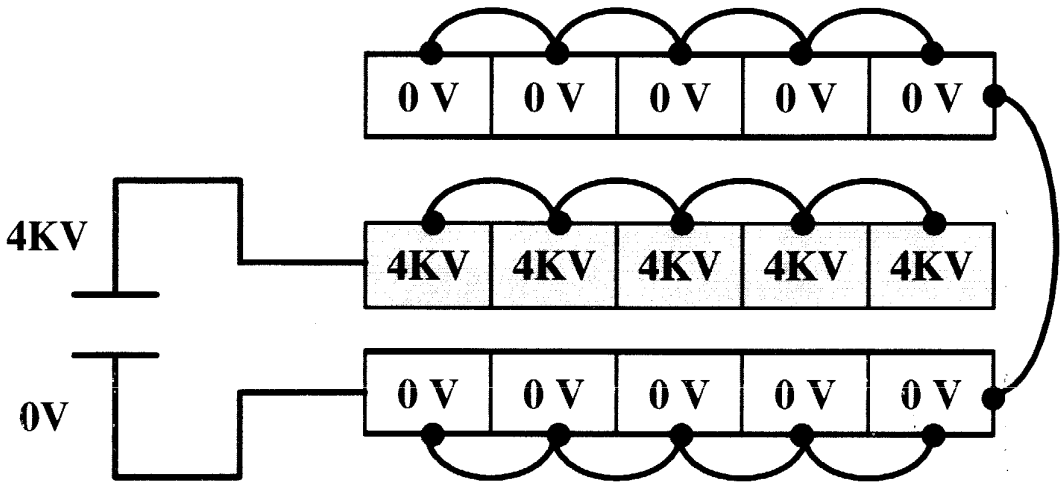

Figure 7.4-A

1000 nA = 1 μA

Measurement	Leakage (Max. 2μA)
Corrector Busses - Layer to Layer	234 nA

Technician(s) _____ Date 1/25/06

STOP

Responsible Authority/Physicist _____ Date 31-JAN-2006

STOP

Have Crew Chief verify setup and sign below before continuing.

Crew Chief _____ Date 1-25-06

Corrector Busses – Across Corners

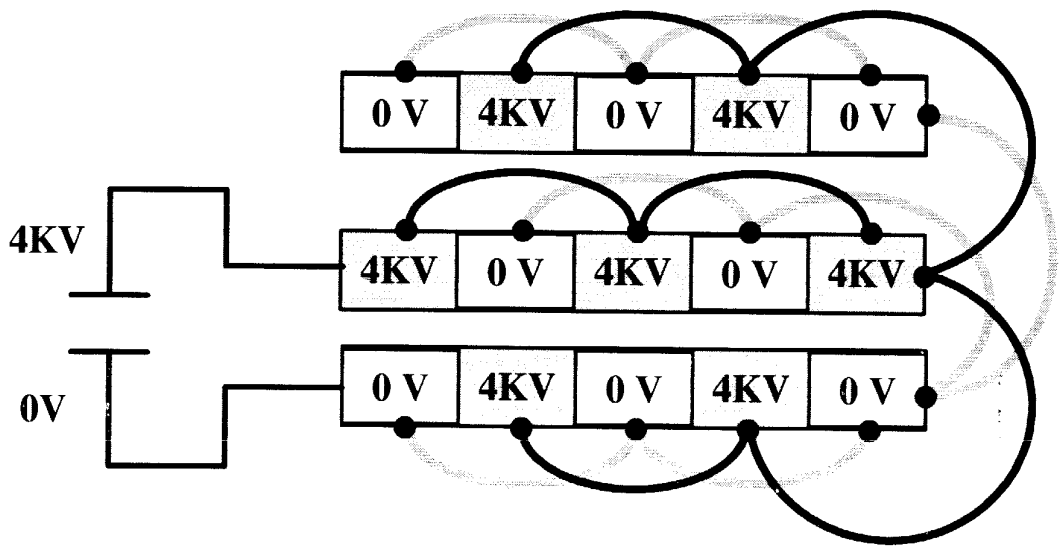

Figure 7.4-B

Measurement	Leakage (Max. 2μA)
Corrector Busses – Across Corners	.178 μA

Technician(s) _____ Date 1/25/06

8.0 Q3 Cold Mass Alignment

8.1 Rotate the Q3 Cold Mass, with the Power Leads facing up, into the proper orientation as shown in Figure 8.1-A.

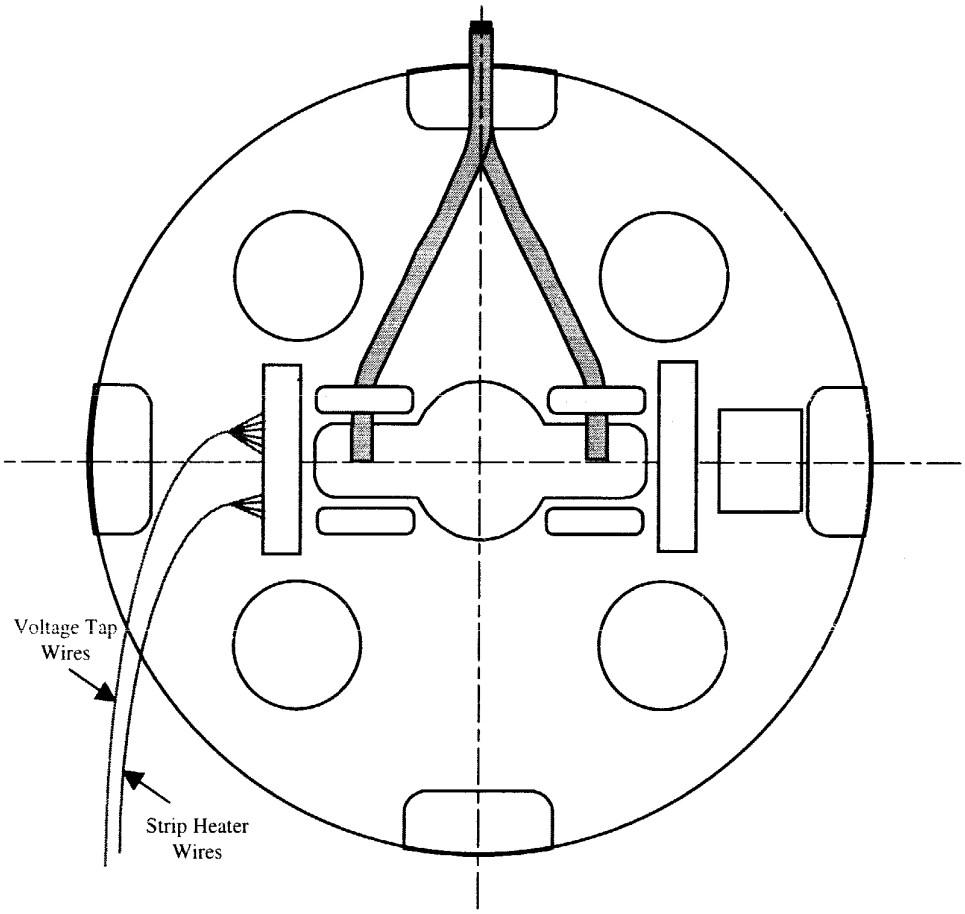

Looking at Lead End of Q3

Figure 8.1-A

Technician(s) Date 1/26/06

8.2 Perform a stretched wire measurement of the system to align the Cold Mass within ± .2 mR.

Responsible Authority/Physicist Date 1/31/06

9.0 Instrumentation Installation

9.1 Prepare Q3 Instrumentation Wire Feed thru (MB-430074). Build per Q3 Module Assembly Instrumentation Wire Feed thru (ME- 430074). Wire Labels and descriptions are shown in Figure 9.1 and per (MB-430074).

Note(s):

USE ONLY CERN LABELS ON WIRES.

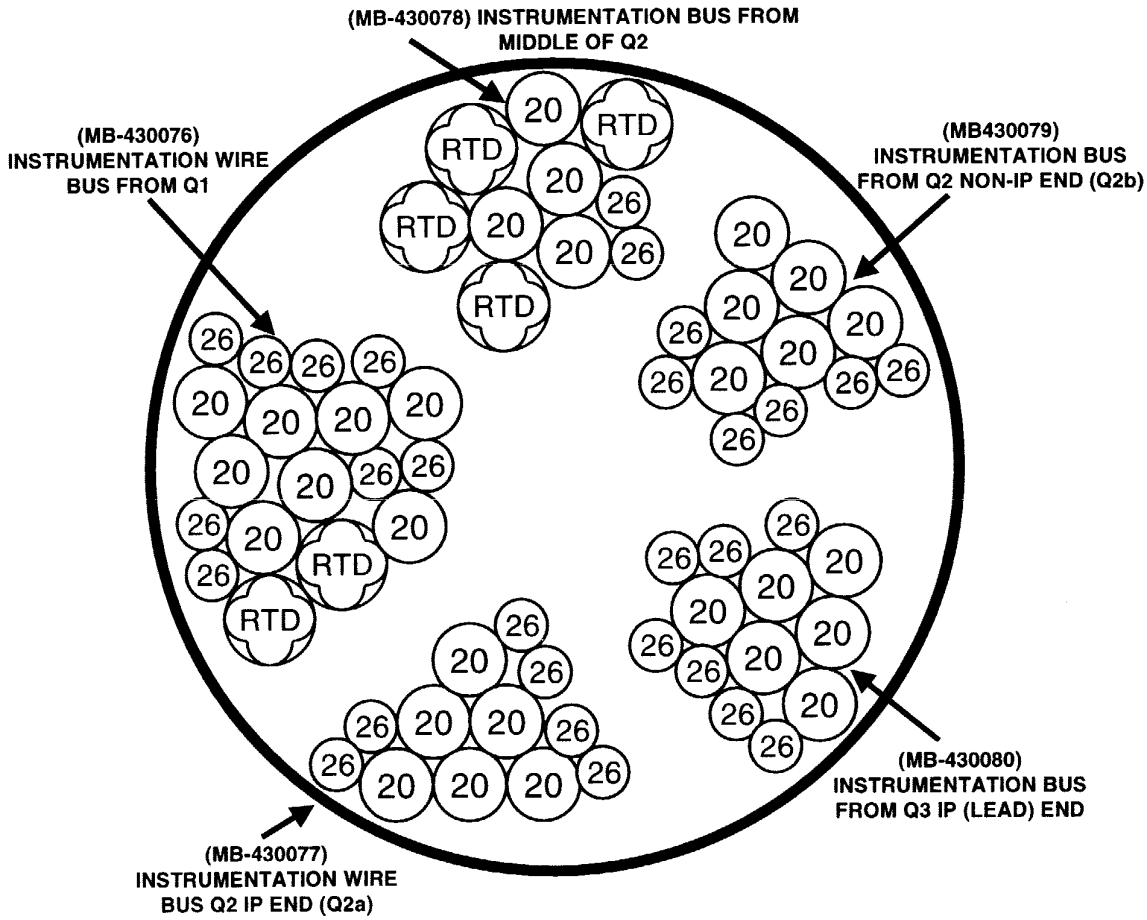

Figure 9.1
INSTRUMENTATION TUBE

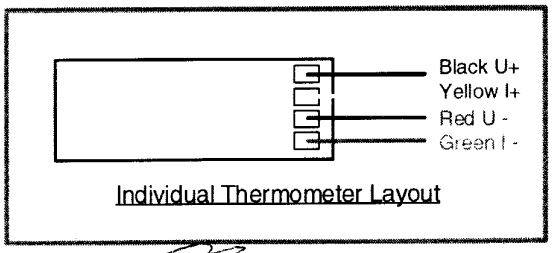

Technician(s) _____ Date 2/1/06

9.2 Slide Instrumentation Bus Assembly (MB-430074) into the proper Q3 Port as per Q3 Module Assembly (ME-369900). Verify that there is sufficient slack in cable to allow for two inches of differential thermal contraction.

Technician(s) _____ Date 2/1/06

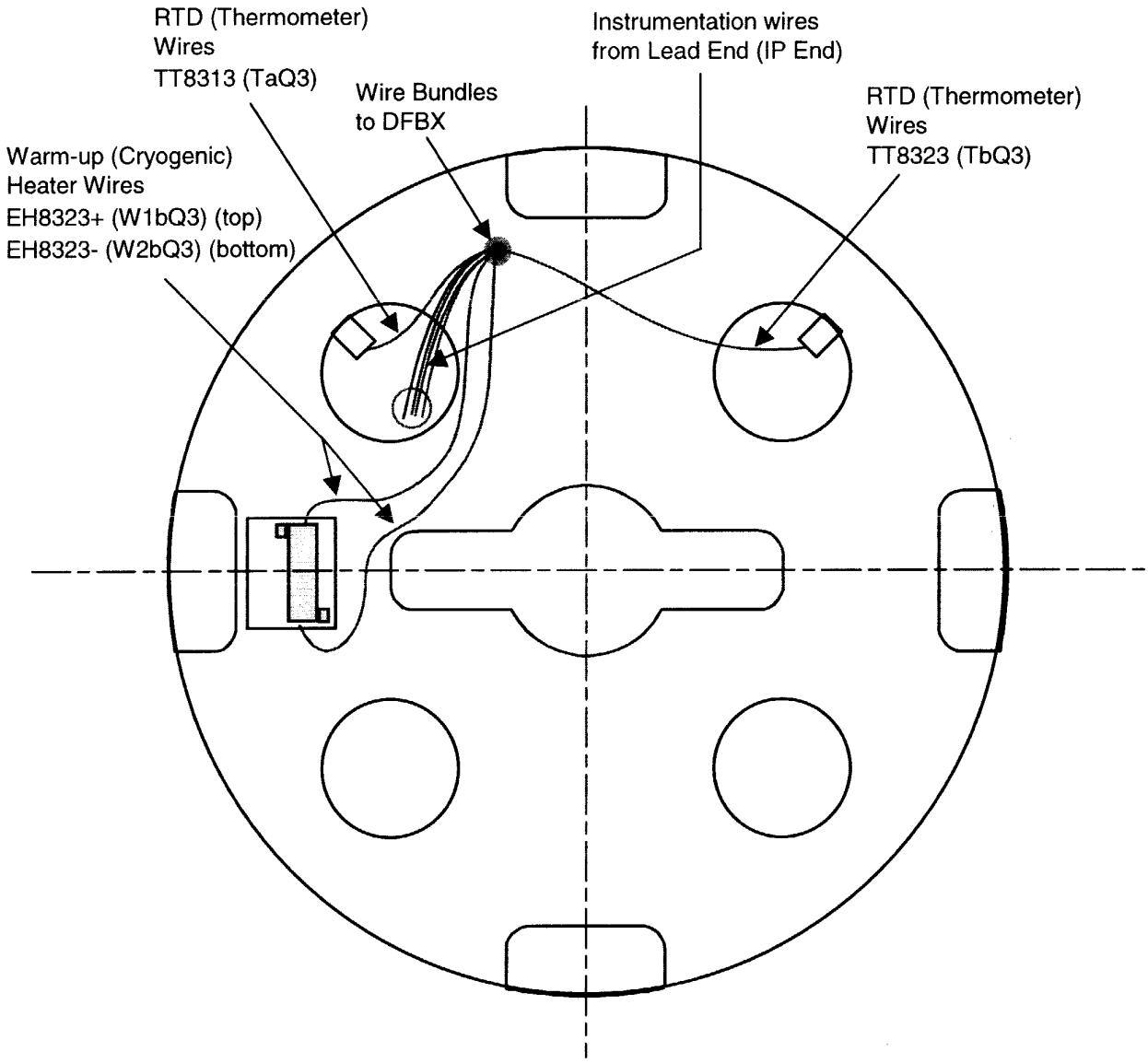

Looking at Non-Lead End (Non-IP End) of Q3

Figure 9.2-A

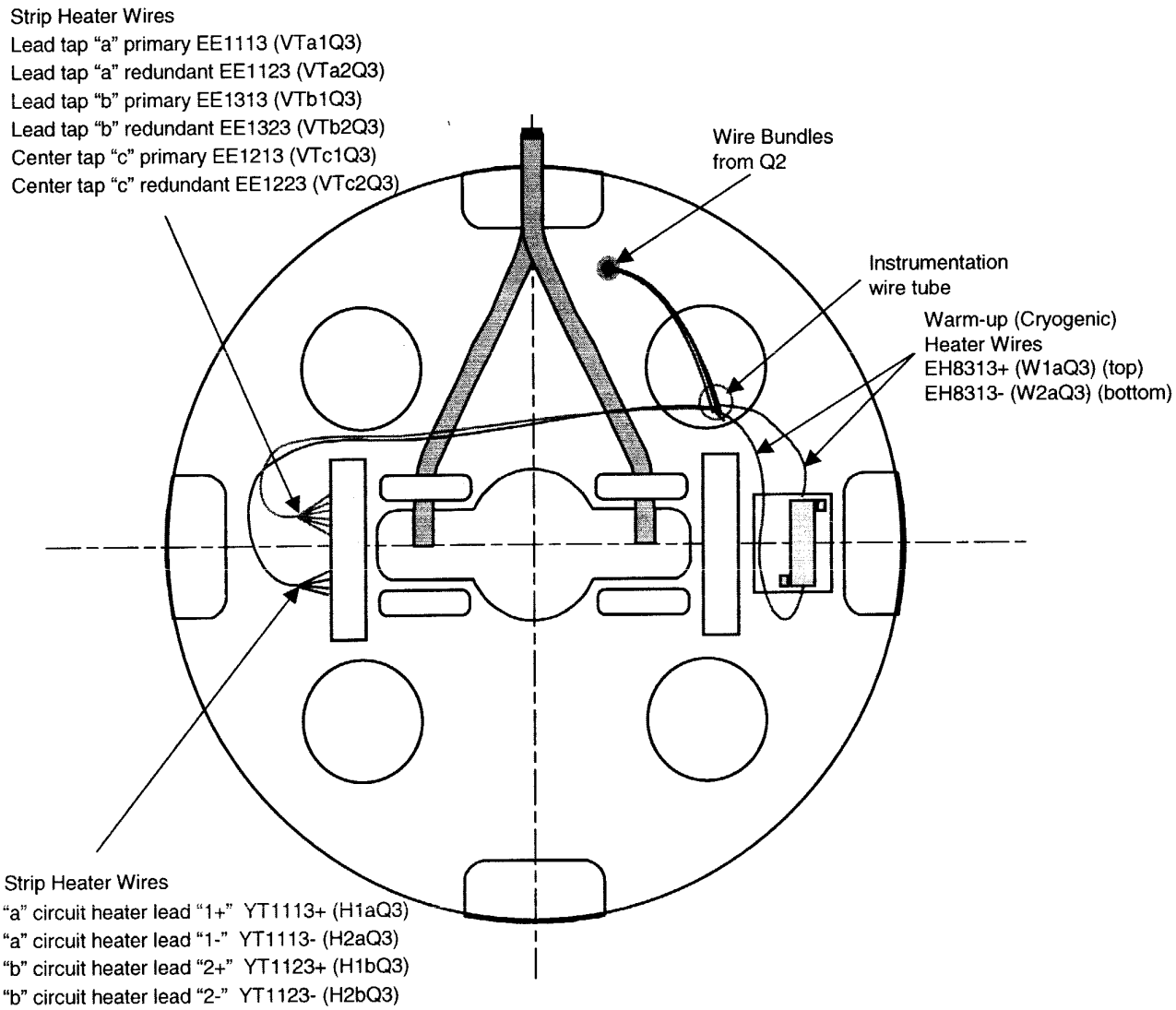

Looking at Lead End (IP end) of Q3

Figure 9.2-B

9.3 Weld Warm-up Heater Base Plates (MA-369997) and RTD Mount Blocks to End Plates as per Q3 Module Assembly (ME-369900).

Weldor(s) Date 2/2/06

9.4 Install Warm-up Heaters (ME-369834) to each end of Q3 as per Q3 Module Assembly (ME-369900).

9.4.1 Install Warm-up Heaters (MA-369834) onto the Warm-up Heater Base Plate (MA-369997).

9.4.2 Solder wires (MA-369832) to the Warm-up Heaters as per (ME-369900).

Technician(s) Date 2/2/06

9.5 Install RTD's as per Q3 Module Assembly (ME-369900). Record Serial Numbers of each RTD in the table below. Attach Data Sheet for each RTD to traveler.

9.5.1 Attach RTD's (MA-369835) (Qty. 4) to Mounting Blocks as per Q3 Module Assembly (ME-369900).

9.5.2 Solder wires (MA-369836) to RTD's as per Q3 Module Assembly (ME-369900). Individual RTD wiring is shown in Figure 9.5.2-A below.

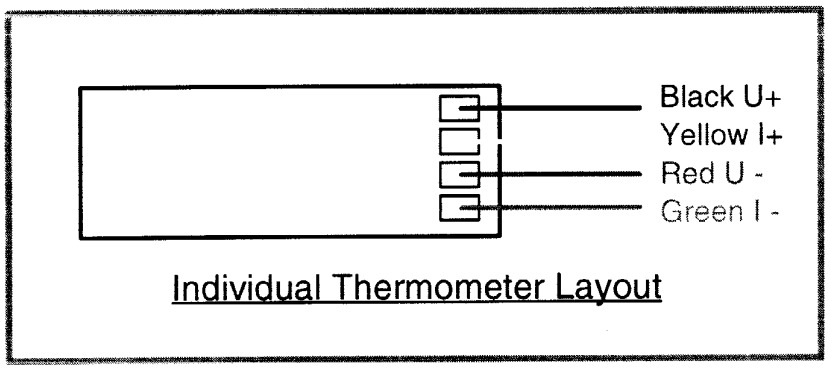

Figure 9.5.2-A

Technician(s) Date 2/2/06

9.6 Perform a continuity check on all RTD's and Warm-Up Heaters. Record the Data below. (1mA). Record the resistance data from the Manufacturer's Traveler below. Compare RTD resistance test results to the resistance results from the Manufacturer's Traveler. Ensure RTD resistances are within **5Ω**. Attach the Manufacturer's RTD papers at the end of this traveler.

To measure the resistance of a Thermometer (RTD):

1. Use Hewlett Packard HP3457A digital multimeter.
2. Record temperature of building within +/- 5 degrees.
3. Press line button to turn line on.
4. Connect wires as shown in Figure below.
5. Push blue button (function key) once.
6. Push OHMF button.
7. Verify arrow in readout is above the 4WΩ (meaning a 4 wire resistance measurement).
8. Read resistance in ohms and record in traveler.

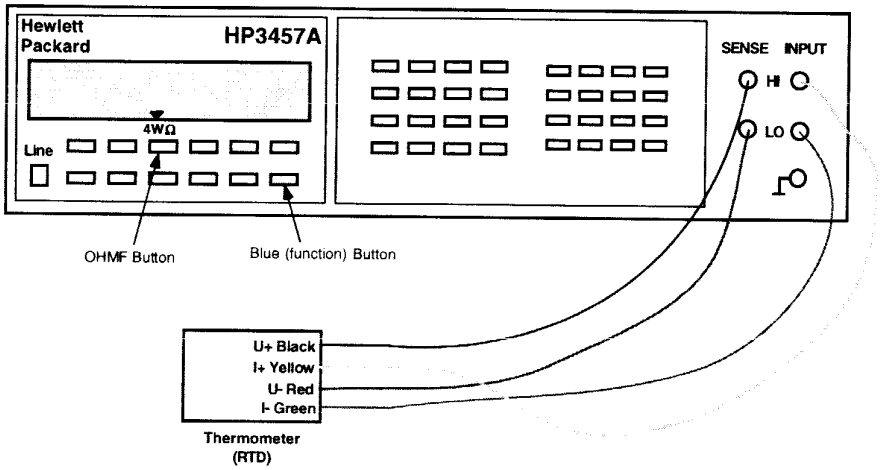

RTD'S				
Building Temperature: 69°			Time of Test: 9:00	
Serial No.	Location	Wire No.	Measured Ω	Mfr. Ω (expedition)
CX LS X13874	Q3 Inst. Bus Side	TT8313	60.760	60.41
CX LS X13864	Q3 Inst. Non-Bus Side	TT8323	60.468	60.02

Cryogenic (Warm-up) Heaters		
Building Temperature: 69°		Time of Test:
Location	Wire No	Measured Ω
Q3 Lead End (IP End)	EH8313+	16.54 Ω
	EH8313-	
Q3 Non-Lead End (Non-IP End)	EH8323+	16.18 Ω
	EH8323-	

Technician(s) [signature]

Date 2/3/06

9.7 Hipot RTD's to 100V. Use Droege Serial No. 910 (FNAL Part No. 51330) or equivalent. (Max. Leakage < 0.1 μA)

STOP

Have Crew Chief verify setup and sign below before continuing.

Crew Chief _____ Date 2-3-06

RTD'S		
Building Temperature: 68°		**Time of Test:** 8:50
Serial No.	**Location**	**Hipot Leakage < 0.1 μA**
TT8313	Q3 Inst. Bus Side	< 0.1 μA
TT8323	Q3 Inst. Non-Bus Side	< 0.1 μA

Technician(s) _____ Date 2/3/06

9.8 Hipot Cryogenic (Warm-up) Heaters to 300V. Use Droege Serial No. 910 (FNAL Part No. 51330) or equivalent. (Max. Leakage < 0.1 μA)

STOP

Have Crew Chief verify setup and sign below before continuing.

Crew Chief _____ Date 2-3-06

Warm-up Heaters		
Building Temperature: 65°		**Time of Test:** 8:57
Location	**Wire No**	**Hipot Leakage < 0.1 μA**
Q3 Lead End (IP End)	**EH8313+**	< 0.1 μA
	EH8313-	
Q3 Non-Lead End (Non-IP End)	**EH8323+**	< 0.1 μA
	EH8323-	

Technician(s) _____ Date 2/3/06

9.9 Fill out the Cryogenic Thermometer Traveller that came with the RTD.
Fill out:

- Corrector Tag Name
- Date
- Resistance Measurement
- Temperature (i.e. 77° F)
- Firm/Laboratory (Fermi)
- Checked By (Print Last Name)

Once all information has been filled out, make a copy of the Cryogenic Thermometer Traveller. Place the original at the end of the traveler and place the copy in the designated binder.

Technician(s) _____ Date 2/3/06

STOP

Crew Chief _____ Date 2/3/06

9.10 Mount the MCBXA Corrector Mounting Ring (ME-390037) to the MCBXA Corrector Magnet.

Technician(s) _____ Date 2/3/06

9.11 Position and align the MCBXA Corrector Magnet using corrector Pre-alignment plates and data obtained in Step 4.0.

Technician(s) _____ Date 2/3/06

9.12 Verify alignment of MCBXA Corrector Magnet as per Q3 Module Assembly (ME-369900).

STOP

Crew Chief _____ Date 2/3/06

9.13 Tack weld the MCBXA Corrector Mounting Ring (ME-390037) to the Q3 Cold Mass Assembly (ME-390528) per Q3 Cold Mass Welded Assembly (ME-390529).

Weldor _____ Date 2/3/06

9.14 Weld the MCBXA Corrector Mounting Ring (ME-390037) to the Q3 Cold Mass Assembly (ME-390108) Non-Lead End per Q3 Cold Mass Welded Assembly (ME-390529).

Weldor _____ Date 2/14/06

9.15 **(This step is to be performed by MTF Technicians)** Identify the Voltage Tap and Heater wires to be spliced. Splice the Cold Mass Voltage Taps and Heater wires from Bundle #1 to Bundle #2 as indicated in Table 9.15-A below.

SPLICE BUNDLE #1 TO BUNDLE#2

Q3 MAGNET SPLICE WIRES		
BUNDLE #1	BUNDLE #2	COMMENT
EE1121	EE1123	Q3 Lead Voltage Tap "a", redundant
EE1111	EE1113	Q3 Lead Voltage Tap "a", primary
EE1211	EE1213	Q3 Center Voltage Tap "c" , primary
EE1221	EE1223	Q3 Center Voltage Tap "c" , redundant
EE1311	EE1313	Q3 Lead Voltage Tap "b" , primary
EE1321	EE1323	Q3 Lead Voltage Tap "b" , redundant
	Empty	No connection
N/A	EE8223	Corrector voltage tap Q3-A2 DO NOT WORRY ABOUT THIS. WILL BE ADDED LATER!!!
YT1111+	YT1113+	Q3 Protection (Strip) Heater
	Empty	No connection
YT1111-	YT1113-	Q3 Protection (Strip) Heater
	Empty	No connection
YT1121+	YT1123+	Q3 Protection (Strip) Heater
	Empty	No connection
YT1121-	YT1123-	Q3 Protection (Strip) Heater

Table 9.15-A

Technician(s) _____ Date 02/04/2006

9.16 **(This step is to be performed by MTF Technicians)** Verify the splices electrically:

Test of Q3 Fixed Voltage Taps

Apply 1A current between Magnet Lead Cable A (+) & Magnet Lead Cable B (-) on the Feed End (See Figure 8.15-A)

1. Connect Current Source: Lead cable A (+) to Positive and Lead cable B (-) to Negative.
2. Use a 3457 or equivalent Digital Voltmeter and record measurement to four decimal places.

Use the Two-Wires Voltage Measurement Technique:

1. Connect Digital Voltmeter LO wire to Lead cable B (-) (or Negative output of Power source).
2. HI wire of Digital Voltmeter will move through wires to measure V.

DO NOT USE DC CURRENT LARGER THAN 2A.

DO NOT APPLY CURRENT THROUGH MAGNET LONGER THAN 30 MINUTES.

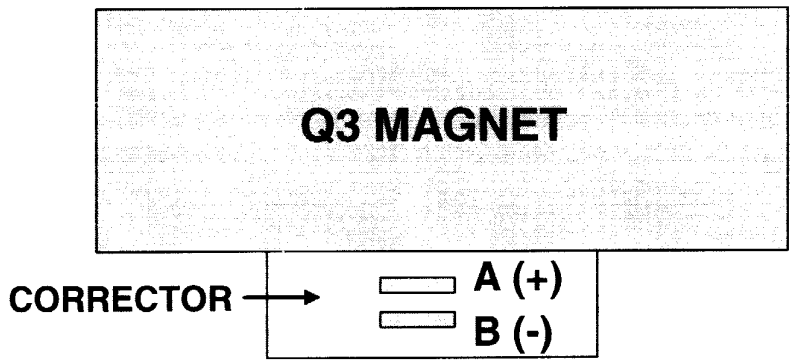

OVERHEAD VIEW OF THE MAGNET LEAD CABLES

MAGNET LEAD CABLE

A (+)
B (-)

Power Bus Location Return End

BUS #1	BUS #2
BUS #3	BUS #4

Power Bus Location Feed End

Figure 9.16-A

HYPERTRONICS CONNECTOR		FNAL Labels	Description	Wire Labels	Expected Voltage,V	Measured
Module	Pin					
NA	NA	VTa1Q3	Q3 Lead Voltage Tap "a", primary	EE1113	7.0000	6.840 V
NA	NA	VTa2Q3	Q3 Lead Voltage Tap "a", redundant	EE1123	7.0000	6.838 V
NA	NA	VTb1Q3	Q3 lead Voltage Tap "b", primary	EE1313	0.0030	.0026V
NA	NA	VTb2Q3	Q3 Lead Voltage Tap "b" redundant	EE1323	0.0030	.0026V
NA	NA	VTc1Q3	Q3 Center Voltage Tap "c", primary	EE1213	3.5000	3.4209 V
NA	NA	VTc2Q3	Q3 Center Voltage Tap "c", redundant	EE1223	3.5000	3.4207 V

Across BUS #1 and BUS #2:	6.843 V

Technician(s) Date 02/04/2006

Protection (Strip) Heaters

Measure resistance across each heater using a handheld meter.

Module	Pin	Breakout BOX Labels	Expected Resistance, OHM	Measured Resistance, OHM	FNAL Label	Description
NA	NA	YT1113+	30	29.06 Ω	H1aQ3	Q3 Protection (Strip) Heater, ("a" circuit) (CERN lead #1+)
NA	NA	YT1113-			H2aQ3	Q3 Protection (Strip) Heater, ("a" circuit) (CERN lead #1-)
NA	NA	YT1123+	30	29.09 Ω	H1bQ3	Q3 Protection (Strip) Heater, ("b" circuit) (CERN lead #1+)
NA	NA	YT1123-			H2bQ3	Q3 Protection (Strip) Heater, ("b" circuit) (CERN lead #1-)

Technician(s) Date 02/04/2006

9.17 Attach wires using putty and install the Voltage Tap Splice Cover Block (MC-430146).

Technician(s) _____ Date 2/6/06

9.18 Mount the MQSX Corrector Mounting Ring (MD-390209) to the MQSX Corrector Magnet.

Technician(s) _____ Date 2/6/06

9.19 Position and align the MQSX Corrector Magnet (ME-390529) using corrector Pre-alignment plates and data obtained in Step 4.0 per Q3 Cold Mass Welded Assembly.

Technician(s) _____ Date 2/6/06

9.20 Verify alignment of MQSX Corrector Magnet as per Q3 Module Assembly (ME-369900).

STOP

Crew Chief _____ Date 2-6-06

9.21 Tack weld the MQSX Corrector Mounting Ring (MD-309209) to the Q3 Cold Mass Assembly (ME-390528) per Q3 Cold Mass Welded Assembly (ME-390529).

Weldor _____ Date 2/7/06

9.22 Weld the MQSX Corrector Mounting Ring (MD-309209) to the Q3 Cold Mass Assembly (ME-390528) Lead End per Q3 Cold Mass Welded Assembly (ME-390529).

Weldor _____ Date 2/14/06

10.0 Installation of MQSX Corrector Coil

10.1 At the IP End, set up the Power Leads for splicing as shown in the Q3 Module Assembly Drawing (ME-369900).

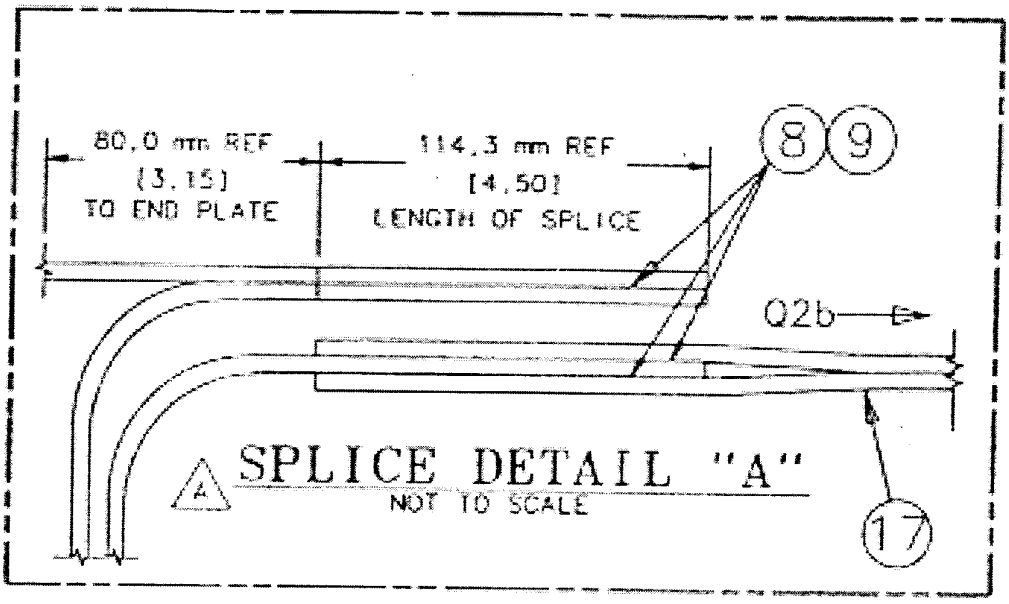

Figure 10.1-A
(ME-369900, Sheet 3 of 5)

Technician(s) _____ Date 2/8/05

10.2 Construct / Obtain Expansion Loop Tail per Q3 Module Assembly Insulated Expansion Loop Tail (MB-430145).

Technician(s) _____ Date 2/8/05

10.3 Solder the Lower Lead to the Expansion Loop Tail from Step 9.2 as per Q3 Module Assembly Drawing (ME-369900).

Technician(s) _____ Date 2/8/05

10.4 Solder the Upper Magnet Lead (Terminal "A", Quadrant 4) to the Lower 8kA Bus as per Q3 Module Assembly Drawing (ME-369900).

Technician(s) _____ Date 2/8/06

10.5 Insulate each splice with 2/3 overlap, .002 x 3/8 wide Kapton, (MA-292722).

Technician(s) _____ Date 2/8/06

10.6 Insert a piece of .005 Kapton between splices.

Technician(s) _____ Date 2/8/06

10.7 Put splices together and insulate splice area with ¾ overlap, .002 x 3/8 wide Kapton (MA-292722).

Technician(s) _____ Date 2/8/06

10.8 Attach Q3 Bus Splice Clamp Assembly (MD-430031) to Q3 Lead as per Q3 Module Assembly (ME-369900).

Technician(s) _____ Date _____

10.9 Attach IP (Lead) End Buss Crossover Block Assembly (MD-430095) as per Q3 Module Assembly (ME-369900).

Technician(s) _____ Date ~~2/8/06~~ 2-18-06

10.10 Attach Cable Clamp Assemblies as per Q3 Module Assembly (ME-369900).

Technician(s) _____ Date 2-20-06

10.11 Solder MQSX Corrector Wires per Q3 Module Assembly (ME-369900) and as shown in Figure 10.12-A.

Technician(s) _____ Date 2-20-06

10.12 Install voltage taps on MQSX corrector leads. One tap is to be soldered to the "A" Lead of each corrector element. Wire label is shown below in Figure 10.12-A.

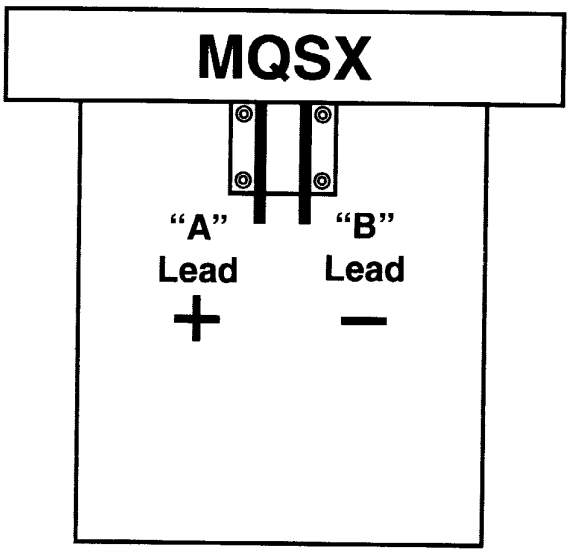

Overhead View

Figure 10.12-A

Corrector Assembly	Corrector Element	Label
MQSX	MQSX	A+ lead Q3A2 (skew quadrupole) voltage tap EE8223 (VTA2)

Technician(s) 2-20-06 Date

11.0 Final MCBXA Corrector Preparations

11.1 Route MCBXA Corrector Coil Wires as shown in Figure 11.1-A below and per Q3 Cold Mass Module Assembly (ME-369900, sheet 4 of 5).

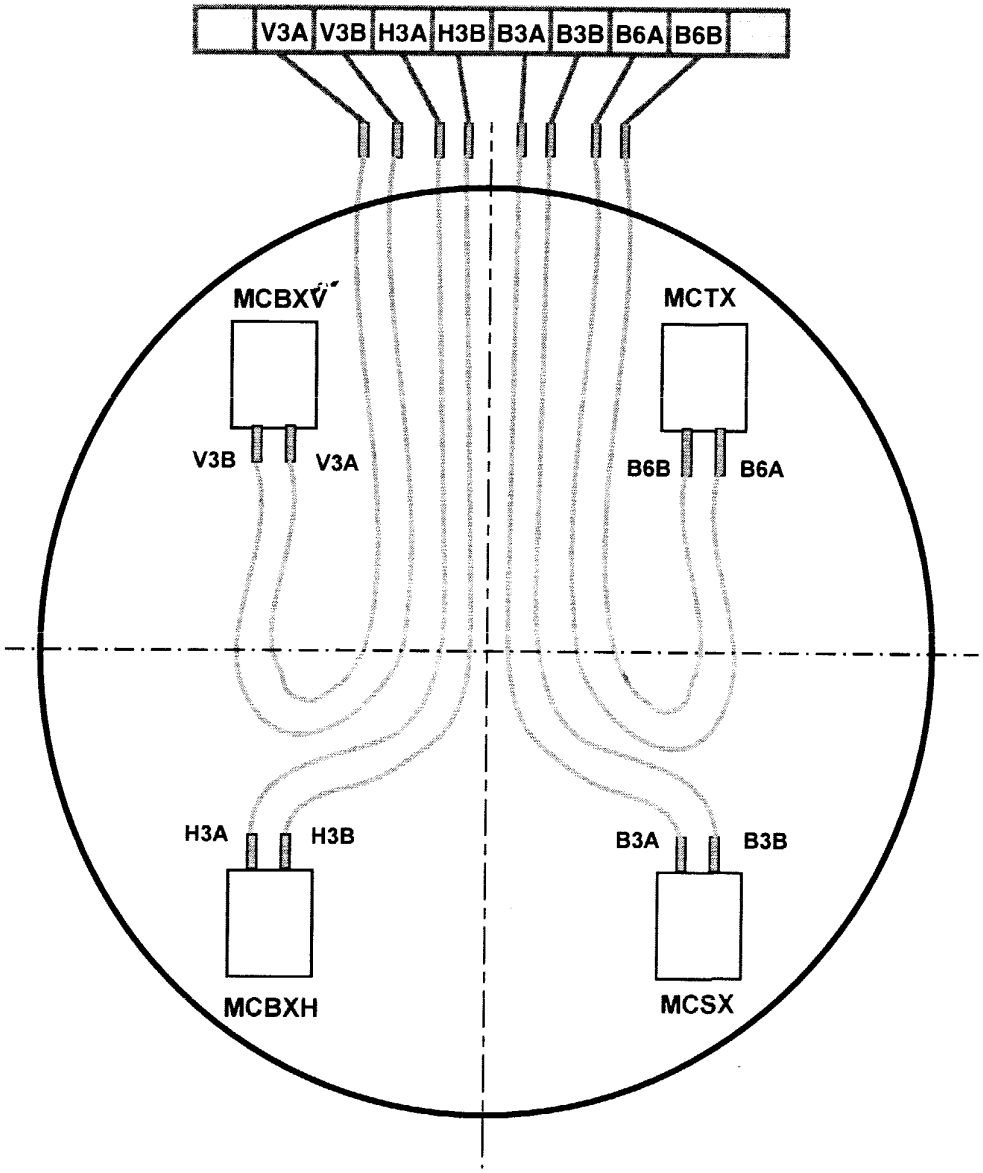

End View of MCBXA for Q3
(in "up" position)

Looking into end of correction coil from DFBX to Q3

Figure 11.1-A

Technician(s) 2-9-06 Date

11.2 Solder Corrector Wires per Q3 Module Assembly (ME-369900) and as shown in Figure 10.2-A.

Technician(s) _____ Date 2/9/06

11.3 Install voltage taps on MCBXA corrector leads. One tap is to be soldered to the "A" Lead of each corrector element. Wire labels are shown below.

Corrector Assembly	Corrector Element	Label
MCBXA	MCBXH	A+ lead Q3H3 (skew dipole) voltage tap EE8123 (VTH3)
	MCBXV	A+ lead Q3V3 (normal dipole) voltage tap EE8113 (VTV3)
	MCSX	A+ lead Q3B3 (normal sextupole) voltage tap EE8313 (VTB3)
	MCTX	A+ lead Q3B6 (normal dodecapole) voltage tap EE8613 (VTB6)

Technician(s) _____ Date 2/9/06

12.0 Final MCSOX Corrector Preparations

12.1 Mount the MCSOX Corrector Magnet to the MCSOX Corrector Mounting Ring (ME-390664).

Technician(s) _____ Date 2-15-06

12.2 Slide the MCSOX Corrector Magnet & MCSOX Corrector Mounting Ring (ME-390664) up to the MCBXA Corrector Magnet.

Technician(s) _____ Date 2-15-06

12.3 Position the MCSOX Corrector Magnet using corrector Pre-alignment plates and data obtained in Step 4.0.

Technician(s) _____ Date 2-15-06

12.4 Verify alignment of MCSOX Corrector Magnet as per Q3 Module Assembly (ME-369900).

STOP

Crew Chief _____ Date 2/15/06

12.5 Position the MCSOX Corrector Magnet longitudinally. (The gap between the MCBXA Magnet and the Mounting Ring should be approximately 15mm.)

Technician(s) _____ Date 2-15-06

12.6 Tack weld MCSOX Corrector Mounting Ring (ME-390664) as per Q3 Cold Mass Welded Assembly (ME-390529).

Weldor(s) _____ Date 2/15/06

12.7 Weld the MCSOX Corrector Mounting Ring (ME-390664) as per Q3 Cold Mass Welded Assembly (ME-390529).

Weldor(s) _____ Date 2/15/06

13.0 Corrector Magnet Pre-Weld Alignment Procedures

13.1 Torque the MCBXA Corrector Magnet bolts to 500 in-lbs. per Note 4 of Q3 Cold Mass Welded Assembly (ME-390529). Shim between the Corrector and Flange as necessary.

Technician(s) _____ Date 2-16-06

13.2 Torque the MCSOX Corrector Magnet bolts to 500 in-lbs. per Note 4 of Q3 Cold Mass Welded Assembly (ME-390529). Shim between the Corrector and Flange as necessary.

Technician(s) _____ Date 2-16-06

13.3 Torque the MQSX Corrector Magnet bolts to 500 in-lbs. per Note 4 of Q3 Cold Mass Welded Assembly (ME-390529). Shim between the Corrector and Flange as necessary.

Technician(s) _____ Date 2-16-06

13.4 Verify all Correctors (MCBXA, MCSOX and MQSX) are aligned and ready for welding procedures.

- ☑ **MCBXA is ready for welding**
- ☑ **MCSOX is ready for welding**
- ☑ **MQSX is ready for welding**

STOP

Responsible Authority/Physicist _____ Date 2/16/06

13.5 Tack weld bolts and washers for mounting the MCBXA Corrector into place per Q3 Cold Mass Welded Assembly (ME-390529). Weld the MCBXA Corrector to the Mounting Ring per Q3 Cold Mass Welded Assembly (ME-390529).

Weldor(s) _____ Date 2/14/06

13.6 Tack weld bolts and washers for mounting the MCSOX Corrector into place per Q3 Cold Mass Welded Assembly (ME-390529). Weld the MCSOX Corrector to the Mounting Ring per Q3 Cold Mass Welded Assembly (ME-390529).

Weldor(s) _____ Date 2/14/06

13.7 Tack weld bolts and washers for mounting the MQSX Corrector into place per Q3 Cold Mass Welded Assembly (ME-390529). Weld the MQSX Corrector to the Mounting Ring per Q3 Cold Mass Welded Assembly (ME-390529).

Weldor(s) _____ Date 2/14/06

14.0 Wire the MCSOX Corrector Magnet

14.1 Attach the MCSOX Splice Plate Mounting Ring (ME-430129), the MCSOX Corrector Splice Face Plate (ME-430130), and the MCSOX Splice Plate Mounting Bars (ME-430128) as per Q3 Module Assembly (ME-369900).

Technician(s) _____ Date 2-20-06

14.2 Route wires as shown in figure below and per Q3 Module Assembly (ME-369900).

Technician(s) _____ Date 2-20-06

14.3 Solder Wires per Q3 Module Assembly (ME-369900) and Figure 14.0-A. (Next Page)

Technician(s) _____ Date 2-20-06

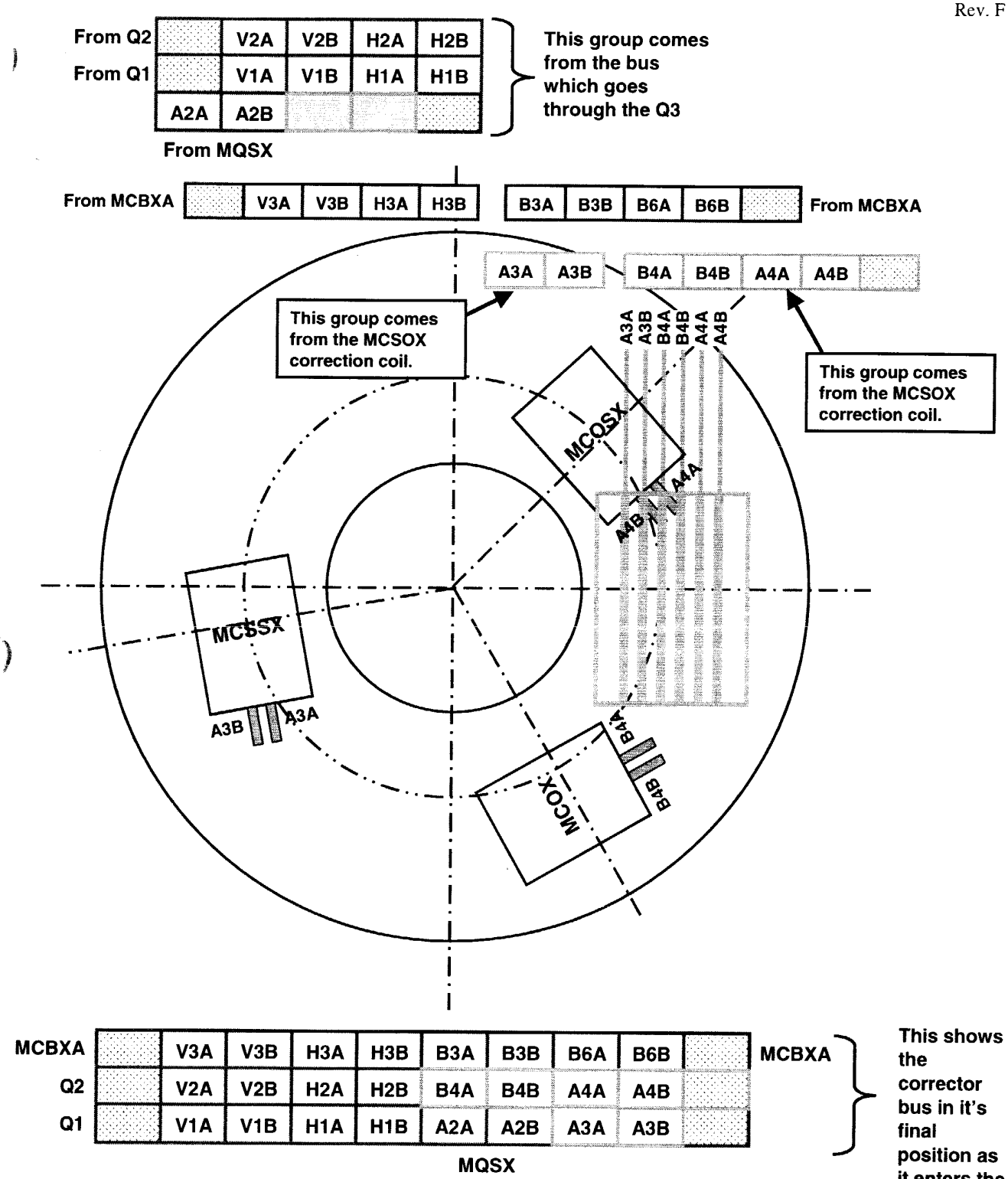

Looking into Non-IP End of Q3

Looking into end of correction coil from DFBX into Q3

Figure 14.0-A

14.4 Install voltage taps on MCSOX corrector leads. One tap is to be soldered to the "A" Lead of each corrector element. Wire labels are shown below.

Corrector Assembly	Corrector Element	Label
MCSOX	MCOSX	A+ lead Q3A4 (skew octupole) voltage tap EE8423 (VTA4)
	MCOX	A+ lead Q3B4 (normal octupole) voltage tap EE8413 (VTB4)
	MCSSX	A+ lead Q3A3 (skew sextupole) voltage tap EE8323 (VTA3)

Technician(s)

3-21-06
Date

15.0 Dome Setup

15.1 Attach IP End Dome (MD-390221) (Q3) to the End Dome Positioning Fixture (MD-369776).

Technician(s) _____ Date 3-21-06

15.2 Align IP End Dome (MD-390221) as shown in Q3 Cold Mass Welded Assembly (ME-390529).

Technician(s) _____ Date 3-21-06

15.3 Level the IP End Dome (MD-390221) using the Ball Socket (MD-369777) and the Mini Level.

Technician(s) _____ Date 3-21-06

15.4 Mark the IP End Dome (MD-390221) and the End Plate with a Horizontal Witness Line. This Step will be used in Step 13.3 to reposition the Domes prior to Welding.

Technician(s) _____ Date 3-21-06

15.5 Remove the IP End Dome (MD-390221) from the Tooling.

Technician(s) _____ Date 3-21-06

15.6 While feeding the electrical wires/bus through the proper ports, attach Non-IP End Dome (MD-390668) (Q3) to the End Dome Positioning Fixture (MD-369776).

Technician(s) _____ Date 3-21-06

15.7 Align Non-IP End Dome (MD-390668) as shown in Q3 Cold Mass Welded Assembly (ME-390529).

Technician(s) _____ Date 3-21-06

15.8 Level the Non-IP End Dome (MD-390668) using the Ball Socket (MD-369777) and the Mini Level.

Technician(s) _____ Date 3-21-06

15.9 Mark the Non-IP End Dome (MD-390668) and the End Plate with a Horizontal Witness Line. This Step will be used in Step 20.1 to reposition the Extension Tubes prior to Welding.

Technician(s) _____ Date 3-21-06

15.10 Remove the Non-IP End Dome (MD- 390668) from the Tooling.

Technician(s) _____ Date 3-21-06

15.11 Perform preliminary reference measurements before moving the Cold Mass to an Assembly Table.

Check one (Upper / Lower slash) and then record the reference measurement and Mini-level No.

Upper Slash ☒

Lower Slash ☐

Take measurement while looking from Non-Lead End toward the Lead End.

Reference Measurement: 074

Mini-level No. ~~074~~ 2

Technician(s) _____ Date 3-29-06

Responsible Authority/Physicist _____ Date 3/30/06

15.12 Move the Cold Mass to an Assembly Table.

Technician(s) _____ Date 3-30-06

16.0 Routing the Power Leads

16.1 Route Cable and Corrector Leads on IP (Lead) End as shown below and per Q3 Module Assembly (ME-369900).

Lead Bus Orientation through Q3

R. Bossert 3-29-04

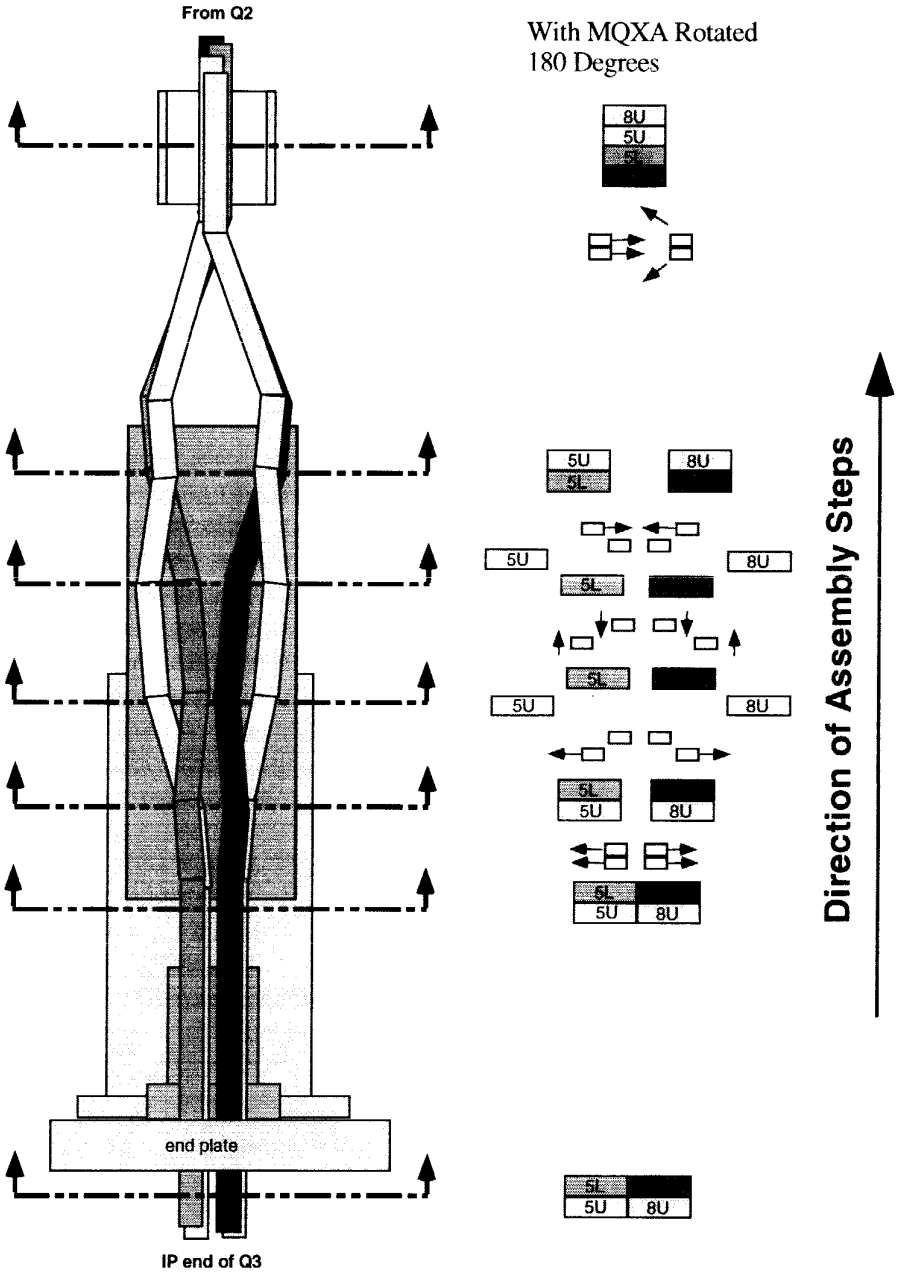

Figure 16.1-A

Technician(s) _____ Date 2-18-06

16.2 At the IP End, attach Spider Assembly (MD-430072) as per Q3 Module Assembly (ME-369900).

Technician(s) _____ Date 2-20-06

16.3 Attach Non-IP End Bus Crossover Block Assembly (MD-430081) as per Q3 Module Assembly (ME-369900).

Technician(s) _____ Date 2-20-06

17.0 Mount MCSOX Bus and Expansion Loop Hardware

17.1 Mount the Side Cable Clamp Assembly (ME-430103) as per Q3 Module Assembly (ME-369900).

N/A

Technician(s) Date

17.2 Mount the Non-IP (Non-Lead End) Corrector Bus Bundle Bracket (ME-430134) as per Q3 Module Assembly (ME-369900).

N/A

Technician(s) Date

This corrector was removed from a previous assembly and sent out for repair these two items were already installed. 2-20-06

18.0 Assemble Bus and Expansion Loop on Non-IP (Non-Lead) End

18.1 Route Non-IP End cables into crossover assembly on Non-IP End as shown in figure 18.1-A.

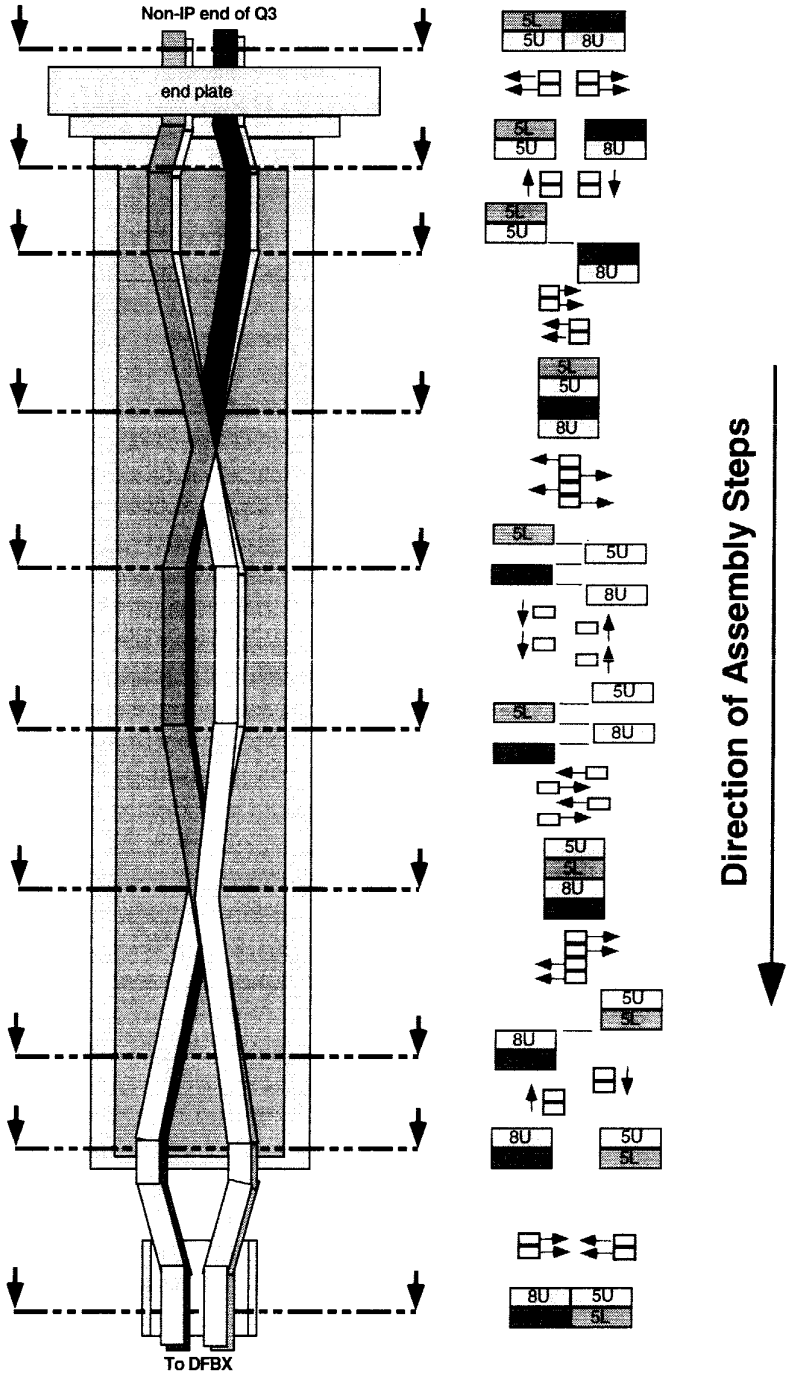

Figure 18.1-A

Technician(s) 2-22-06 Date

18.2 Configure Bus Expansion Loop as per Q3 Module Assembly (ME-369900).

Technician(s) _____ Date 3-20-06

18.3 At the Non-IP End, attach Spider Assembly (MB-430096) as per Q3 Module Assembly (ME-369900).

Technician(s) _____ Date 3-20-06

19.0 Electrical Inspection

Perform an electrical inspection on each of the Individual Quadrants and the Cold Mass. Refer to the Valhalla and Leader Free Standing Coil Measurement Procedure (ES-292306).

To measure the Resistance of a Q3 Cold Mass:

1. Use Valhalla Scientific 4300B digital micro-ohmmeter.
2. Set Test Current to 0.1 amp.
3. Set Scale to 2V full scale.
4. Turn temperature compensation on.
5. Turn test current off.
6. Connect I_{HI} to "A" Lead as shown in figure 18.1-A.
7. Connect I_{LO} to "B" Lead as shown in figure 18.1-A.
8. Turn test current on.
9. Connect V_{HI} and V_{LO} to voltage taps as shown in resistance table.
10. To measure Total with leads, connect V_{HI} to "A" Lead and V_{LO} to "B" Lead.
11. At the IP End, jumper the 8Ka leads as shown in Figure 18.1-A.
12. Read resistance and record in traveler.

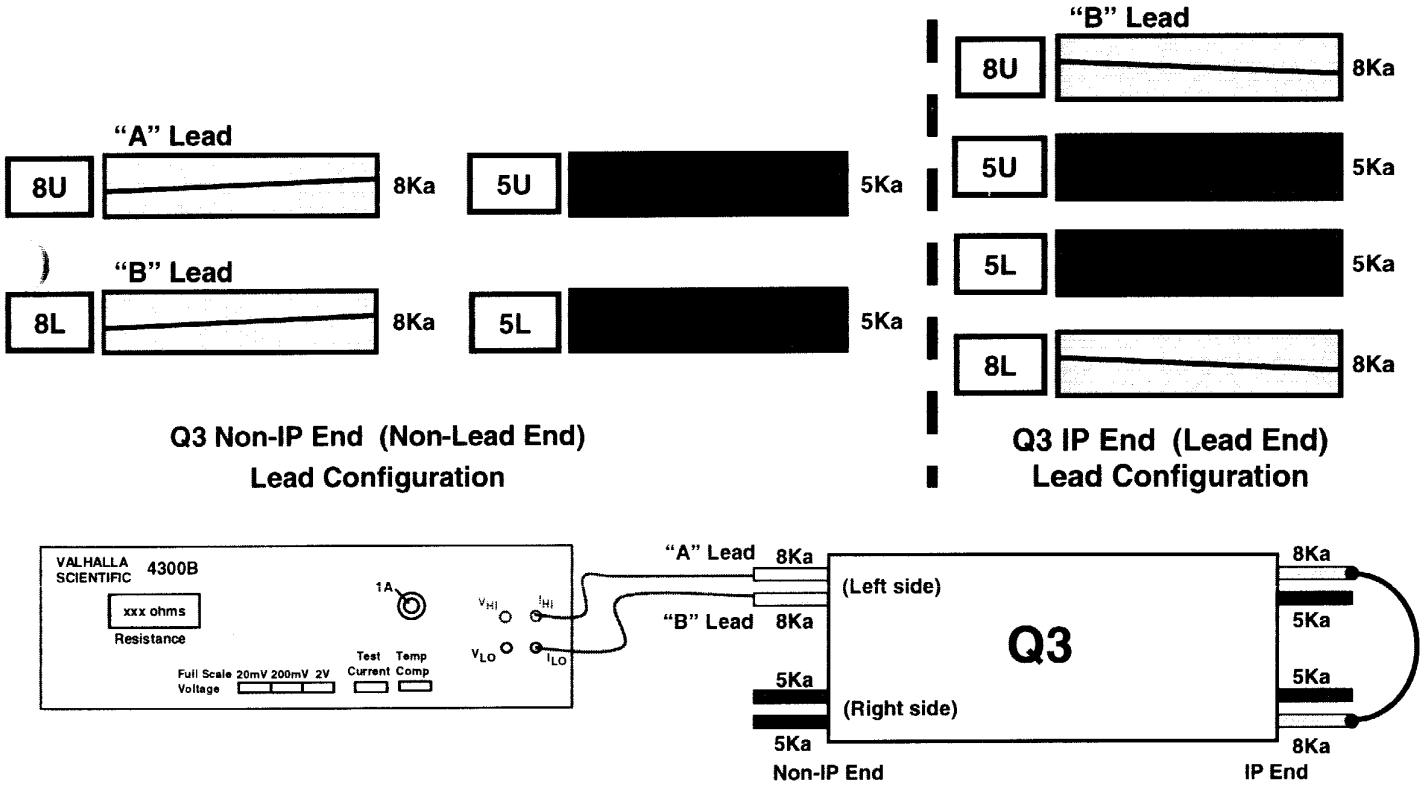

Figure 19.0-A

19.1 Measure the Resistance of the Q1 Cold Mass.

(Q3) Resistance				Nominal 3.35 to 3.45 Ω
				Total Resistance
Connect	Fermi	CERN	KEK	
V_{HI}	VTa1Q3	EE1113	a1	3.391 Ω
V_{LO}	VTc1Q3	EE1213	c1	
V_{HI}	VTc1Q3	EE1213	c1	3.391 Ω
V_{LO}	VTb1Q3	EE1313	b1	

				Total Resistance with Leads
				Nominal 6.75 to 6.85 Ω
V_{HI}	VTa1Q3	EE1113	a1	6.781 Ω
V_{LO}	VTb1Q3	EE1313	b1	
V_{HI}	Q4 Power Lead			6.798 Ω
V_{LO}	Q3 Power Lead			

O. Friang
Technician(s)

3/22/06
Date

19.2 Measure the resistance of Redundant Voltage Taps.

Q3 Redundant Voltage Taps				Nominal 3.35 to 3.45 Ω
Connect	Fermi	CERN	KEK	Resistance
V_{HI}	VTa2Q3	EE1123	a2	3.39 Ω
V_{LO}	VTc2Q3	EE1223	c2	
V_{HI}	VTc2Q3	EE1223	c2	3.39 Ω
V_{LO}	VTb2Q3	EE1323	b2	

O. Friang
Technician(s)

3/22/06
Date

To measure Ls and Q of a Q3 Cold Mass:

1. Use Agilent 4263B LCR Meter.
2. Turn power on by pushing line button. Wait 30 seconds until display screen is lit.
3. Recall program #1. To do this, push recall (Rcl), then push #1, then push Enter.
4. Push Auto/Hold button to release hold.
5. Verify that the frequency displayed in the upper right corner of the display screen is 1000 Hz and the level recorded in the lower right corner of the display screen is 1V or 1000 mV.
6. Connect H_{cur} to "A" power lead as shown in figure 19.0-B.
7. Connect L_{cur} to "B" power lead as shown in figure 19.0-B.
8. Connect H_{pot} and L_{pot} buttons to voltage taps as shown below.
9. Read Ls and Q from display and record in table.

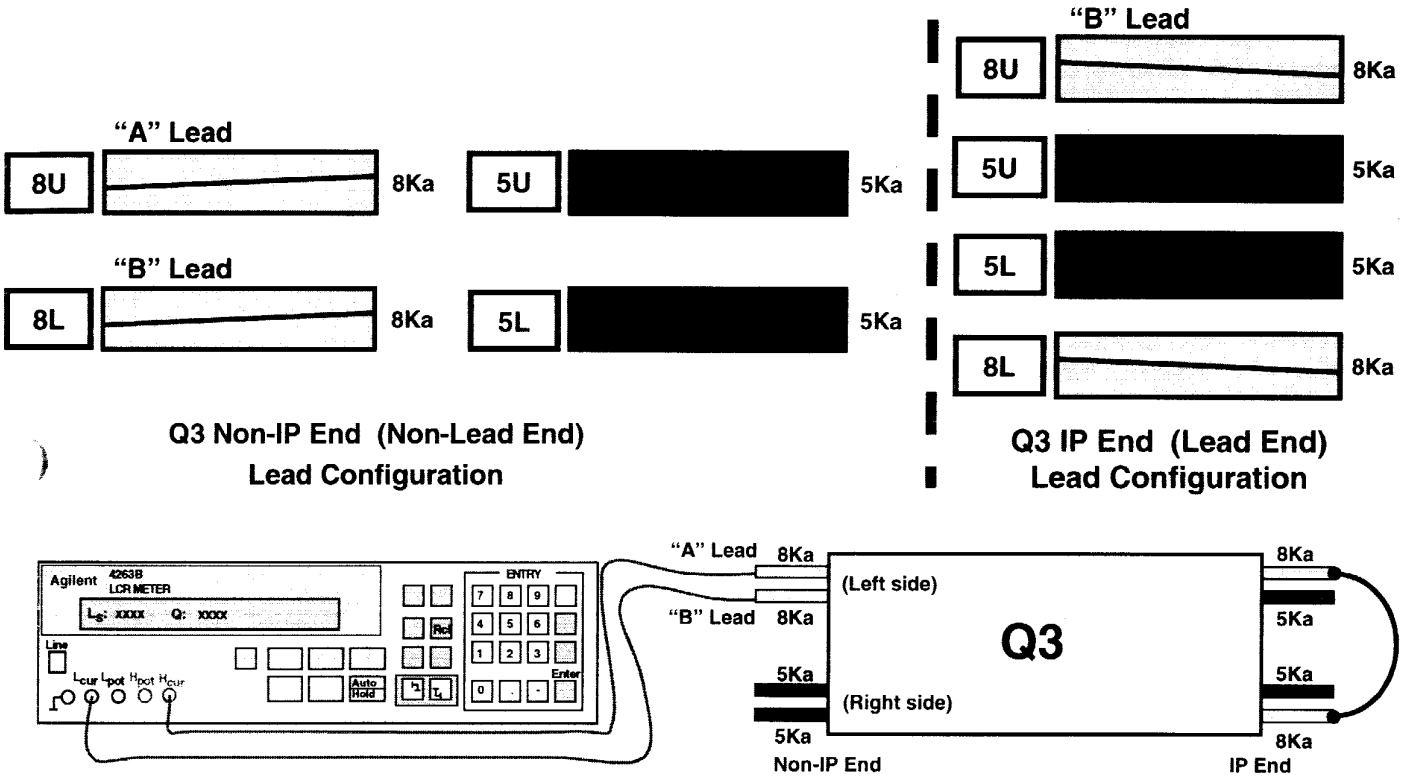

Figure 19.0-B

19.3 Measure the Inductance (Ls) of a Q1 Cold Mass.

(Q3) Inductance				Nominal 15 to 16 mH
				Total Inductance
Connect	Fermi	CERN	KEK	
H_{POT}	VTa1Q3	EE1113	a1	15.981 mH
L_{POT}	VTc1Q3	EE1213	c1	
H_{POT}	VTc1Q3	EE1213	c1	15.907 mH
L_{POT}	VTb1Q3	EE1313	b1	

				Nominal 30 to 32 mH
				Total Inductance
H_{POT}	VTa1Q3	EE1113	a1	31.884 mH
L_{POT}	VTb1Q3	EE1313	b1	
H_{POT}	Q4 Power Lead			31.890 mH
L_{POT}	Q3 Power Lead			

O. Firang / [illegible] — Technician(s)

3 22 06 — Date

19.4 Measure the Q-Factor (Q) of a Q1 Cold Mass.

(Q3) Q-Factor				Nominal 1.0 to 1.2
				Total Q
Connect	Fermi	CERN	KEK	
H_{POT}	VTa1Q3	EE1113	a1	1.2
L_{POT}	VTc1Q3	EE1213	c1	
H_{POT}	VTc1Q3	EE1213	c1	1.2
L_{POT}	VTb1Q3	EE1313	b1	

				Nominal 1.0 to 1.2
				Total Inductance
H_{POT}	VTa1Q3	EE1113	a1	1.2
L_{POT}	VTb1Q3	EE1313	b1	
H_{POT}	Q4 Power Lead			1.2
L_{POT}	Q3 Power Lead			

O. Firang / [illegible] — Technician(s)

3/22/06 — Date

To measure the resistance of a Thermometer (RTD):

1. Use Hewlett Packard HP3457A digital multimeter.
2. Record temperature of building within +/- 5 degrees.
3. Press line button to turn line on.
4. Connect wires as shown in Figure below.
   U+ (Black) to Sense HI
   I+ (Yellow) to Input HI
   U- (Red) to Sense LO
   I- (Green) to Input LO
5. Push blue button (function key) once.
6. Push OHMF button.
7. Verify arrow in readout is above the 4WΩ (meaning a 4 wire resistance measurement).
8. Read resistance in ohms and record in traveler.

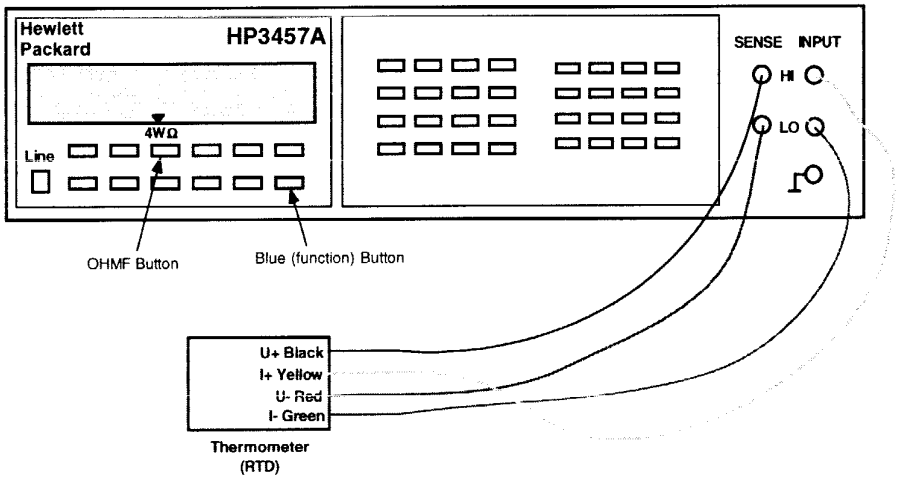

To measure the resistance of a Cryogenic (Warm-up) Heater

1. Use Hewlett Packard HP3457A digital multimeter.
2. Record temperature of building within +/- 5 degrees.
3. Press line button to turn line on.
4. Connect wires as shown in Figure below.
5. Push blue button (function key) once.
6. Push OHMF button.
7. Verify arrow in readout is above the 4WΩ (meaning a 4 wire resistance measurement).
   Note: Although this is technically a 4 wire measurement, it is effectively a 2 wire measurement, since there are only 2 wires connected to each heater.
8. Read resistance in ohms and record in traveler.

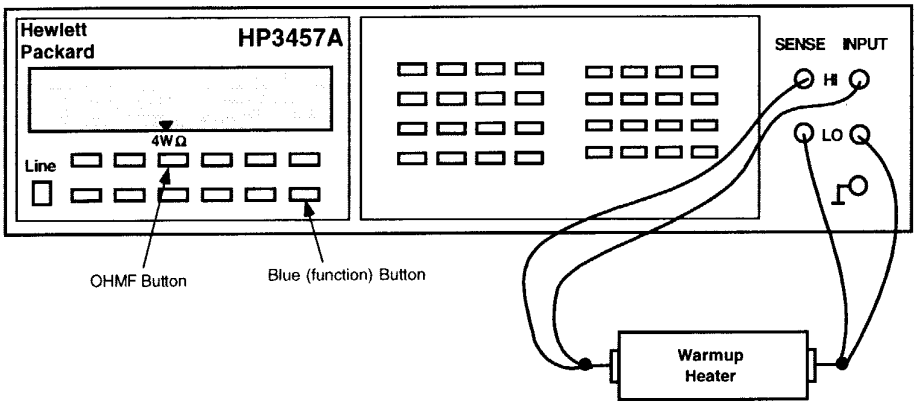

19.5 Measure the resistance of the RTD's and Cryogenic (Warm-up) Heaters. Record MFR Resistance (Expedition) for RTD's.

Q3 - RTD's and Cryogenic (warm-up) Heaters					
Temperature of Building (± 5°): 70°					
Component	**Fermi**	**CERN**	**Range**	**Resistance**	**MFR's Resistance (Expedition)**
Q3 RTD, primary	TaQ3	TT8313	**60 to 70Ω**	60.70 Ω	60.41 Ω
Q3 RTD, redundant	TbQ3	TT8323	**60 to 70Ω**	60.42 Ω	60.02 Ω
Q3 Cryogenic (warm-up) Heater (LE) - wire at top (CERN #1 I+)	W1aQ3	EH8313+	**16 to 18.5Ω**	16.56 Ω	
Q3 Cryogenic (warm-up) Heater (LE) - wire at bottom (CERN #1 I-)	W2aQ3	EH8313-			
Q3 Cryogenic (warm-up) Heater (Non-LE) - wire at top (CERN #2 I+)	W1bQ3	EH8323+	**16 to 18.5Ω**	16.15 Ω	
Q3 Cryogenic (warm-up) Heater (Non-LE) - wire at bottom (CERN #2 I-)	W2bQ3	EH8323-			

O. Fraay Y. Jace — Technician(s)

3/22/06 — Date

19.6 Using the Hewlett Packard HP3457A digital multimeter, measure the Protection (Strip) Heater Resistance for Q3.

Q3 Protection (Strip) Heater Resistance					
Fermi	**CERN**	**KEK**	**Description**	**Limit**	**Resistance**
H1aQ3	**YT1113+**	**HA1**	**Circuit A**	**28 to 32Ω**	28.70 Ω
H2aQ3	**YT1113-**	**HA2**			
H1bQ3	**YT1123+**	**HB1**	**Circuit B**	**28 to 32Ω**	28.79 Ω
H2bQ3	**YT1123-**	**HB2**			

O. Fraay Y. Jace — Technician(s)

3/22/06 — Date

19.7 Using the Valhalla 4300B, connect 10mA applied voltage thru the corrector Power Leads. Measure Resistance and record in the table below.

Corrector Bus Leads

	V3A	V3B	H3A	H3B	B3A	B3B	B6A	B6B	
	V2A	V2B	H2A	H2B	B4A	B4B	A4A	A4B	
	V1A	V1B	H1A	H1B	A2A	A2B	A3A	A3B	

(View Looking from DFBX into Q3)

Corrector Element	Readout Labels		Power Labels		Resistance	Nominal Resistance
			I_{HI}	I_{LO}		
MQSX	A2A	EE8223	A2A	A2B	.06	.057 to .063Ω
	EE8223	A2B			7.57	7.22 to 7.98Ω
	A2A	A2B			7.63	7.20 to 7.96Ω
MCBXV	V3A	EE8113	V3A	V3B	.01	.010 to .025Ω
	EE8113	V3B			17.27	16.57 to 18.32Ω
	V3A	V3B			17.29	16.56 to 18.31Ω
MCBXH	H3A	EE8123	H3A	H3B	.01	.010 to .025Ω
	EE8123	H3B			21.16	20.35 to 22.50Ω
	H3A	H3B			21.18	20.35 to 22.50Ω
MCTX	B6A	EE8613	B6A	B6B	.02	.010 to .025Ω
	EE8613	B6B			97.86	93.45 to 103.29Ω
	B6A	B6B			97.88	93.33 to 103.15Ω
MCSX	B3A	EE8313	B3A	B3B	.02	.010 to .025Ω
	EE8313	B3B			27.61	26.47 to 29.26Ω
	B3A	B3B			27.63	26.45 to 29.23Ω
MCOSX	A4A	EE8423	A4A	A4B	.01	.009 to .011Ω
	EE8423	A4B			11.84	11.18 to 12.36Ω
	A4A	A4B			11.85	11.12 to 12.29Ω
MCOX	B4A	EE8413	B4A	B4B	.01	.010 to .025Ω
	EE8413	B4B			12.85	11.86 to 13.11Ω
	B4A	B4B			12.87	12.16 to 13.45Ω
MCSSX	A3A	EE8323	A3A	A3B	.01	.009 to .011Ω
	EE8323	A3B			13.37	11.59 to 13.81Ω
	A3A	A3B			13.39	12.66 to 14.00Ω

Technician(s) _____ Date _____

19.8 Attach Backing Splines as per Q3 Module Assembly (ME-369900).

C. Friary
Technician(s)

3/2/06
Date

19.9 At the IP End (Lead End) wrap the Springboard Assemblies in Kapton and then wrap with Kevlar String (MA-369912) every ½ - ¾" over Kapton as per Q3 Module Assembly (ME-369900).

C. Friary
Technician(s)

3/2/06
Date

19.10 At the Non-IP End (Non-Lead End) wrap the entire Springboard Assembly in Kapton tape and then wrap the uppermost bend of magnet and corrector bus with Nomex. Wrap the entire springboard with white glass tape followed by Kevlar String (MA-369912) every ½ - ¾" as per Q3 Module Assembly (ME-369900).

C. Friary
Technician(s)

3/2/06
Date

20.0 Beam Tube Insertion

20.1 Inspect the Beam Tube (MC-369522) for damage. Clean Beam Tube using lint free Heavy Duty Wipers (Fermi stock 1660-0150) and Isopropyl Alcohol (Fermi stock 1920-0300) as per Insulated Beam Tube Assembly for Q3 (MD-369838).

Technician(s) _____ Date 3-22-06

20.2 Using Insertion Tooling, insert the Beam Tube (MC-369522) into the Magnet Assembly as per Beam Tube Insertion Tooling (MD-369789).

Technician(s) _____ Date 3-22-06

20.3 Place a mark 45mm from the Kapton insulation on Non-IP End of the Beam Tube.

Technician(s) C. Friary Date 3/22-06

STOP

20.4 Verify that the placement of the mark in Step 20.3 is correct.

Crew Chief _____ Date 3-22-06

20.5 Using the Wachs Cutter, cut the Non-IP End of the Beam Tube at the mark.

Technician(s) _____ Date 3-22-06

20.6 Measure the inside Beam Tube length and record this measurement below.

Step	Description	Measurement
20.6.1	**Beam Tube Length**	8887
	Subtract 8650mm (±2mm)	**- 8650mm**
20.6.2	**(Length to be cut from IP End)**	= 237

Technician(s) _____ Date 3-22-06

20.7 Using the number recorded in Step 20.6.2, measure and place a mark at the IP End of the Beam Tube.

Technician(s) _____ Date 3/22/06

20.8 Verify that the placement of the mark in Step 20.7 is correct.

STOP

Crew Chief _____ Date 3-22-06

20.9 Using the Wachs Cutter, cut the IP End of the Beam Tube at the mark.

Technician(s) _____ Date 3/22/06

20.10 Measure and verify Beam Tube length is 8650mm (±2mm). Record Actual Beam Tube Length below.

Actual Beam Tube Length	8649 mm

Technician(s) _____ Date 3/22/06

STOP

Responsible Authority/Physicist _____ Date 3/22/06

20.11 Hipot the Beam Tube to coil, heaters and ground. (5kV) (Max. Leakage < 0.5μA)

STOP

Have Crew Chief verify setup and sign below before continuing.

Crew Chief _____ Date 3-22-06

Hipot	Leakage or Failure Voltage	Pass	Fail
Beam Tube to coil, heaters and ground	.091 μA	✓	

Technician(s) _____ Date 3/22/06

STOP

AMY

Responsible Authority/Physicist _____ Date 29-MAR-2006

21.0 Dome Installation

21.1 Reposition the IP End Dome as shown in Q3 Cold Mass Welded Assembly (ME-390529) using the Horizontal Witness Line from step 15.4.

Technician(s) _____ Date 3-24-06

21.2 Ensure Spider Assembly (MB-430096) is installed properly as per Q3 Module Assembly (ME-369900).

Roger

Responsible Authority _____ Date 3-24-06

21.3 Remove IP End Dome.

Technician(s) _____ Date 3-24-06

21.4 Tack weld the corrector mounting hardware in place as per Q3 Cold Mass Welded Assembly (ME-390529).

Rob

Weldor(s) _____ Date 3-24-06

21.5 Putty / Stycast all nuts and bolts that remain unwelded.

Technician(s) _____ Date 3-24-06

21.6 Re-install IP End Dome.

Technician(s) _____ Date 3-24-06

21.7 Mark the location that the Shipping Restraint Nuts (MC-390294) will be welded on the Non-IP End.

Technician(s) _____ Date 3-23-06

21.8 Weld the Shipping Restraint Nuts (MC-390294).

Rob

Weldor(s) _____ Date 3-23-06

21.9 Reposition the Non-IP End Extension Tube as shown in Q3 Cold Mass Welded Assembly (ME-390529) using the Horizontal Witness Line from step 15.09.

Technician(s) _____ Date 3-24-06

21.10 Tack weld the Extension Tube (MD-390667) to the Cold Mass per (ME-390529).

Weldor(s) _____ Date 3-24-06

21.11 Verify that the Expansion Loop has not been damaged and is functioning properly.

Technician(s) _____ Date 3-24-06

21.12 Reposition the Non-IP End Dome.

Technician(s) _____ Date 3-24-06

21.13 Verify that the Spider Assembly (MB-430096) has not been damaged and is functioning properly.

Technician(s) _____ Date 3-24-06

21.14 Ensure Spider Assembly (MB-430096) is installed properly as per Q3 Module Assembly (ME-369900).

RODGER

Responsible Authority _____ Date 3-24-06

21.15 Tack weld the Non-IP End Dome in place at approximately 6-8 places around the Dome as per Q3 Cold Mass Welded Assembly (ME-390529).

Weldor(s) _____ Date 3-24-06

21.16 Tack weld the IP End Dome in place at approximately 6-8 places around the Dome per Q3 Cold Mass Welded Assembly (ME-390529).

Weldor(s) _____ Date 3-24-06

21.17 Hipot the Cable Busses according to tables below. Hipots are done @ 3kV. Hold for 30 seconds. Maximum Leakage is 3 μA.

Ramp Rate	Hi Potential (3000 V)	Grounded	Leakage
10 V/sec	8L	Everything else	.177 μA
10 V/sec	5L	Everything else	.198 μA
10 V/sec	5U	Everything else	.234 μA
3 V/sec. Coil - Ground Coil - Strip Htrs	8U	Everything else	.640 μA
3 V/sec. Strip Htrs - Ground Strip Htrs - Coil	Strip Heaters	Everything else	.635 μA

Technician(s)

Date 3-25-06

21.18 Hipot according to tables below.

Q3 Corrector and Bus Hipots

Looking into Non-IP End of Q3

Looking from DFBX to Q3

Gray – 500V Others – 0V ### Others – 0V

MCBXA		V3A	V3B	H3A	H3B	B3A	B3B	B6A	B6B	
Q2		V2A	V2B	H2A	H2B	B4A	B4B	A4A	A4B	
Q1		V1A	V1B	H1A	H1B	A2A	A2B	A3A	A3B	
						MQSX		MCSOX		

MCBXA
MCSOX

This shows the corrector bus in its final configuration as it enters the DFBX

Need to verify that there is no continuity between any of these paths

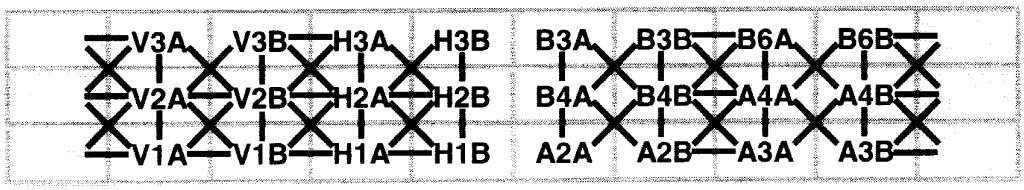

Measurement

Hipot #1		V3A	V3B	H3A	H3B	B3A	B3B	B6A	B6B	
Gray – 500V		V2A	V2B	H2A	H2B	B4A	B4B	A4A	A4B	
Others – 0V		V1A	V1B	H1A	H1B	A2A	A2B	A3A	A3B	

.329 µA

Hipot #2		V3A	V3B	H3A	H3B	B3A	B3B	B6A	B6B	
Gray – 500V		V2A	V2B	H2A	H2B	B4A	B4B	A4A	A4B	
Others – 0V		V1A	V1B	H1A	H1B	A2A	A2B	A3A	A3B	

.318 µA

Hipot #3		V3A	V3B	H3A	H3B	B3A	B3B	B6A	B6B	
Gray – 500V		V2A	V2B	H2A	H2B	B4A	B4B	A4A	A4B	
Others – 0V		V1A	V1B	H1A	H1B	A2A	A2B	A3A	A3B	

.323 µA

Hipot #4		V3A	V3B	H3A	H3B	B3A	B3B	B6A	B6B	
Gray – 500V		V2A	V2B	H2A	H2B	B4A	B4B	A4A	A4B	
Others – 0V		V1A	V1B	H1A	H1B	A2A	A2B	A3A	A3B	

.293 µA

Q3 Corrector and Bus Hipots

Looking into Non-IP End of Q3

Looking from DFBX to Q3

Measurement

Hipot #5
Gray – 500V
Others – 0V

V3A	V3B	H3A	H3B	B3A	B3B	B6A	B6B
V2A	V2B	H2A	H2B	B4A	B4B	A4A	A4B
V1A	V1B	H1A	H1B	A2A	A2B	A3A	A3B

.334 µA

Hipot #6
Gray – 500V
Others – 0V

V3A	V3B	H3A	H3B	B3A	B3B	B6A	B6B
V2A	V2B	H2A	H2B	B4A	B4B	A4A	A4B
V1A	V1B	H1A	H1B	A2A	A2B	A3A	A3B

.341 µA

Hipot #7
Gray – 500V
Others – 0V

V3A	V3B	H3A	H3B	B3A	B3B	B6A	B6B
V2A	V2B	H2A	H2B	B4A	B4B	A4A	A4B
V1A	V1B	H1A	H1B	A2A	A2B	A3A	A3B

.325 µA

Technician(s) _____ Date 3-25-06

21.19 Weld the Extension Tube (MD-390667) to the Cold Mass per (ME-390529).

Weldor(s) _____ Date 3/27/06

21.20 Weld the Non-IP End Dome, skip weld around to minimize distortion as per Q3 Cold Mass Welded Assembly (ME-390529).

Weldor(s) _____ Date 3/27/06

21.21 Weld the IP End Dome, skip weld around to minimize distortion per Q3 Cold Mass Welded Assembly (ME-390529).

Weldor(s) _____ Date 3/29/06

22.0 Suspension System Assembly

22.1 Clean the Suspension System with Ethyl Alcohol (Fermi stock 1920-0550) and Kimwipes (Fermi stock 1660-2500) or equivalent.

Part Name	Part Number	Quantity	Completed
Fixed Support Assembly	**(ME-390041)**	**1**	✓
Sliding Support Assembly	**(ME-390042)**	**1**	✓
Tie Bar Assembly	**(ME-390400)**	**2**	✓
Tie Bar Shim, 6.4mm (.250")	**(ME-390118)**	**4**	✓
Tie Bar Shim, 2.4mm (.093")	**(ME-390119)**	**4**	✓
Tie Bar Shim, 0.8mm (.031")	**(ME-390120)**	**4**	✓
Suspension System Adjusting Screw	**(MB-390039)**	**8**	✓
M16 x 70mm SHCS	**(MA-393021)**	**8**	✓
Washer (.656" ID x 1.38" OD x .13" THK STN STEEL)	**(MA-390377)**	**8**	✓

Label the IP End and the Non-IP End of the Vacuum Vessel with a temporary sticker or equivalent.

Technician(s) _____ Date 3/27/06

22.2 Insert the Fixed Support Assembly (ME-390041) into the Vacuum Vessel and position at the IP End.

Technician(s) _____ Date 3/27/06

22.3 Install the Suspension System Adjusting Screws (MB-390039) and Socket Head Cap Screws (MA-393021) into the Vacuum Vessel to hold the Fixed Support Assembly in place. Coat all screw threads with Molybdenum Disulfide prior to installation.

Technician(s) _____ Date 3/27/06

22.4 Adjust the Vertical and rotational alignment of the Fixed Supports using the Suspension System Adjusting Screws (MB-390039). Ensure all four screws are in contact with the Fixed Support and that Diametrically Opposing Support Lugs are equidistant from the Vacuum Vessel Wall.

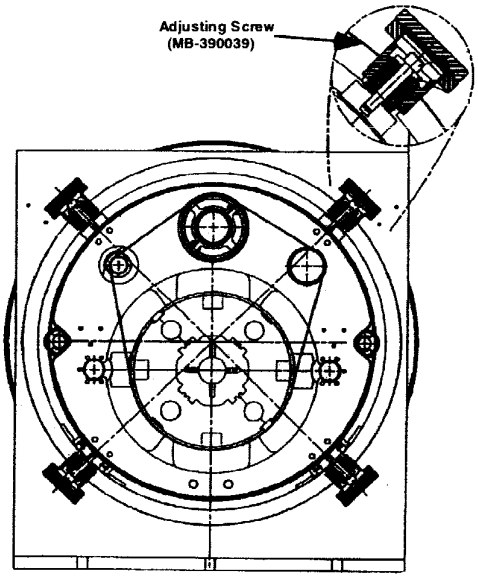

Technician(s) _____ Date 3/27/06

22.5 Insert the Sliding Support Assembly (ME-390042) in to the Vacuum Vessel and position at the Non-IP End.

Technician(s) _____ Date 3/27/06

22.6 Install the Suspension System Adjusting Screws (MB-390039) and Socket Head Cap Screws (MA-393021) into the Vacuum Vessel to hold the Sliding Support Assembly in place. Coat all screw threads with Molybdenum disulfide prior to installation.

Technician(s) _____ Date 3/27/06

22.7 Adjust the Vertical and rotational alignment of the Sliding Supports using the Suspension System Adjusting Screws (MB-390039). Ensure all four screws are in contact with the Sliding Support and that Diametrically Opposing Support Lugs are equidistant from the Vacuum Vessel Wall.

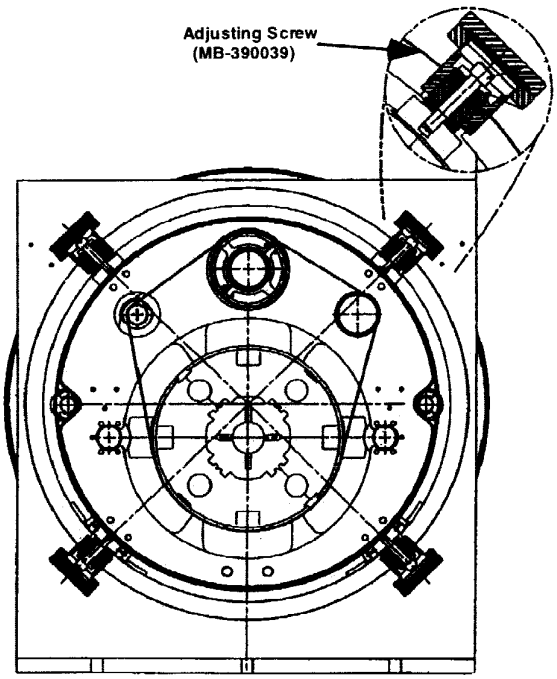

Technician(s) _____ Date 3/27/06

22.8 Assemble the Suspension System using the Fixed Support Assembly (ME-390041), the Sliding Support Assemblies (ME-390042) and the Tie Bar Assemblies (MC-390167). Insert Tie Bar Shims (MC-390118), (MB-390119) and (MB-390120) between the Sliding Support Assemblies (ME-390042) and the Tie Bar Assemblies (MC-390400) as required.
(Reference drawing: ME-390525).

Technician(s) _____ Date 3/27/06

22.9 Measure the distance between the Suspension Rings at the bottom of the Threaded Rods (Measure from the face of one stainless steel lug to the face of the other stainless steel lug) and record measurements below. Copy this page and place copy in designated book for later reference. (TR-333730, Q3 Cryostat Final Assembly, Step 5.1).

Non-IP North to IP North 4152

Non-IP South to IP South 4151

Technician(s) _____ Date 3/27/06

22.10 Measure two places (**in mm**) (See positions in figure below while facing Vacuum Vessel End) from the face of the IP End Vacuum Vessel Flange to the inside surface of the IP End Suspension System's G-11. (Fixed Support).

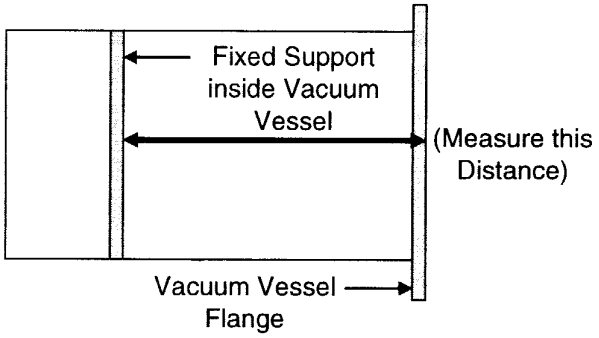

IP End - Vacuum Vessel Side View (Cut Away)

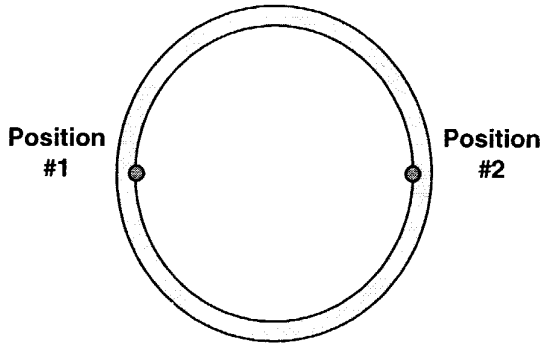

IP End - Vacuum Vessel End View

Measurement recorded from Position #1 to the Fixed Support inside the Vacuum Vessel: 2014 **mm**

Measurement recorded from Position #2 to the Fixed Support inside the Vacuum Vessel: 2013 **mm**

Total of both measurements: 4027 **mm**

Divide the above Total by 2 and record the average measurement here: 2013.5 **mm**

Technician(s) _____ Date 3/27/06

22.11 Measure two places (**in mm**) (positions in figure below while facing Vacuum Vessel End) from the face of the Non-IP End Vacuum Vessel Flange to the inside surface of the Non-IP End Suspension System's G-11. (Sliding Support).

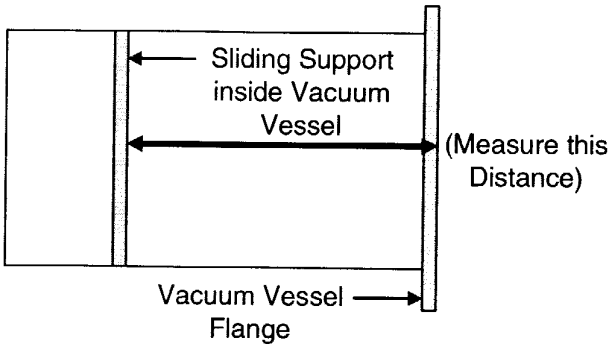

Non-IP End - Vacuum Vessel Side View (Cut Away)

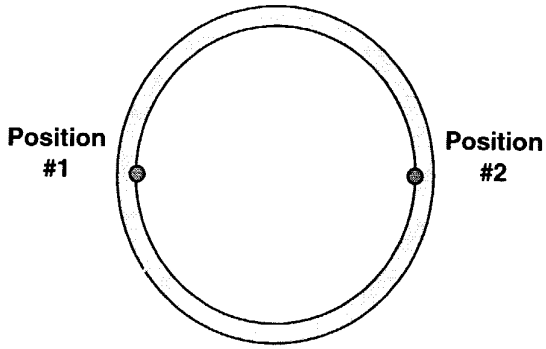

Non-IP End - Vacuum Vessel End View

Measurement recorded from Position #1 to the Sliding Support inside the Vacuum Vessel: 2010 **mm**

Measurement recorded from Position #2 to the Sliding Support inside the Vacuum Vessel: 2010 **mm**

Total of both measurements: 4020 **mm**

Divide the above Total by 2 and record the average measurement here: 2010 **mm**

Technician(s) _____ Date 3/27/06

22.12 Label the IP End Support and the Non-IP End Support. (Writing on the G-11 Support is acceptable).

OLCIR → Technician(s) _____ Date 3/27/06

22.13 Loosen each Suspension System Adjusting Screw (MB-390039) 1/2 turn and remove the Suspension System from the Vacuum Vessel.

Technician(s) _____ Date 3/27/06

22.14 Configure the Suspension Tooling for Q3 Assembly per Cryostat Layout Tooling & Assembly (ME-364604). Place Suspension Assembly on the tooling and make necessary adjustments to the tooling.

Technician(s) _____ Date 3-29-06

22.15 Assemble the Suspension Mounting Brackets (MD-390279) to the Support Assemblies.

Technician(s) _____ Date 3-30-06

22.16 Slide the Suspension System over the Cold Mass and place on tooling. The Suspension system may be disassembled during this step. Record shim sizes and locations prior to disassembly.

Note(s):

Ensure that the Suspension System is configured properly to the Cold Mass with respect to the IP and Non-IP Ends.

Technician(s) _____ Date 3-30-06

STOP

22.17 Verify locking collars exist only at IP End support.

Crew Chief _____ Date 3-30-06

22.18 Establish alignment between the Cold Mass and the Support system. Install shims between the Brass Slide Bars and the Stainless Steel Blocks on each support as needed.

Record Shim size and location below.

East-North .060 **East South** .060

West-North .060 **West-South** .060

Technician(s) _____ Date 3-30-06

STOP

22.19 Verify the Alignment of the Cold Mass and the Support System.

Crew Chief _____ Date 3/30/06

22.20 Weld the Cold Mass to the Outboard Cold Mass Brackets (MB-430082) as per Q3 Module Assembly (ME-390900).

Weldor(s) _____ Date 3/30/06

22.21 Add 112.5mm to the Final number recorded in Step 22.10 and record below.

Recorded average measurement from Step 22.10: 2013.5

Add: + **112.5 mm**

Record New Total: 2126.0

Technician(s) _____ Date 3/30/06

22.22 Add 337.5mm to the Final number recorded in Step 22.11 and record below.

Recorded average measurement from Step 22.11: 2010

Add: + **337.5 mm**

Record New Total: 2347.5

Technician(s) _____ Date 3/30/06

22.23 Position the IP End of the Beam Tube at the distance recorded in Step 22.21 from the inside surface of the IP G-10 support.

Technician(s) _____ Date 3/30/06

22.24 Measure the Non-IP End of the Beam Tube from the inside surface of the Non-IP End support. Compare this number to the number recorded in Step 22.22.

Note(s):
These numbers should be the same to within 1 mm. If these numbers differ greater than 1 mm, contact Responsible Authority/Physicist.

Record measurement here: 2344

Recorded measurement from Step 22.22: 2347.5

A Gould — Technician(s) 3/30/06 — Date

22.25 Measure from the IP End of the Beam Tube to the Spot Face on the IP End Dome. Record below.

Record measurement here: 22.5 mm

A Gould — Technician(s) 3/30/06 — Date

22.26 Subtract 15mm from the number recorded in Step 22.25. This is the Spacer width for the IP End. Record below.

Recorded Measurement from Step 22.25: 22.5

Subtract: - 15mm

Spacer width for the IP End: 7.5

A Gould — Technician(s) 3/30/06 — Date

22.27 Measure from the Non-IP End of the Beam Tube to the Spot Face on the Non-IP End Dome. Record below.

Record measurement here: 21.5 mm

A Gould — Technician(s) 3/30/06 — Date

22.28 Subtract 15mm from the number recorded in Step 22.27. This is the Spacer width for the Non-IP End. Record below.

beam tube short by 1mm TP

Recorded Measurement from Step 22.27: 21.5

Subtract: - 15mm

Spacer width for the Non-IP End: 6.5 + 1 = 7.5 MM

A Gould — Technician(s) 3/30/06 — Date

23.0 Cold Bore

23.1 Position the Beam Tube (MC-369522) longitudinally per Q3 Cold Mass Welded Assembly (ME-390529).

Technician(s) _____ Date 4/3/06

23.2 Flare both ends of the Beam Tube using Flaring Tool (MC-390416) per Q3 Cold Mass Welded Assembly (ME-390529).

Technician(s) _____ Date 3/30/06

23.3 Add Spacer between Beam Tube Flange and IP End Dome, if necessary.

Spacer Added? Yes ☒ No ☐

Technician(s) _____ Date 4/3/06

23.4 Position Beam Tube Flange (MC-390538) over the Beam Tube and onto IP End Dome per Q3 Cold Mass Welded Assembly (ME-390529).

Technician(s) _____ Date 4/3/06

23.5 Weld the Beam Tube to the Flange at IP End as per Q3 Cold Mass Welded Assembly (ME-390529).

Weldor(s) _____ Date 4/3/06

23.6 Position the Beam Tube Flange (MC-390538) over the Beam Tube and onto the Non-IP End Dome (Q3) per Q3 Cold Mass Welded Assembly (ME-390529).

Technician(s) _____ Date 4/3/06

23.7 Weld Beam Tube to Flange at Non-IP End as per Q3 Cold Mass Welded Assembly (ME-390529).

Weldor(s) _____ Date 4/3/06

24.0 Electrical Inspection

Perform an electrical inspection on each of the Individual Quadrants and the Cold Mass. Refer to the Valhalla and Leader Free Standing Coil Measurement Procedure (ES-292306).

To measure the Resistance of a Q3 Cold Mass:

1. Use Valhalla Scientific 4300B digital micro-ohmmeter.
2. Set Test Current to 0.1 amp.
3. Set Scale to 2V full scale.
4. Turn temperature compensation on.
5. Turn test current off.
6. Connect I_{HI} to "A" Lead as shown in figure 23.1-A.
7. Connect I_{LO} to "B" Lead as shown in figure 23.1-A.
8. Turn test current on.
9. Connect V_{HI} and V_{LO} to voltage taps as shown in resistance table.
10. To measure Total with leads, connect V_{HI} to "A" Lead and V_{LO} to "B" Lead.
11. At the IP End, jumper the 8Ka leads as shown in Figure 23.1-A.
12. Read resistance and record in traveler.

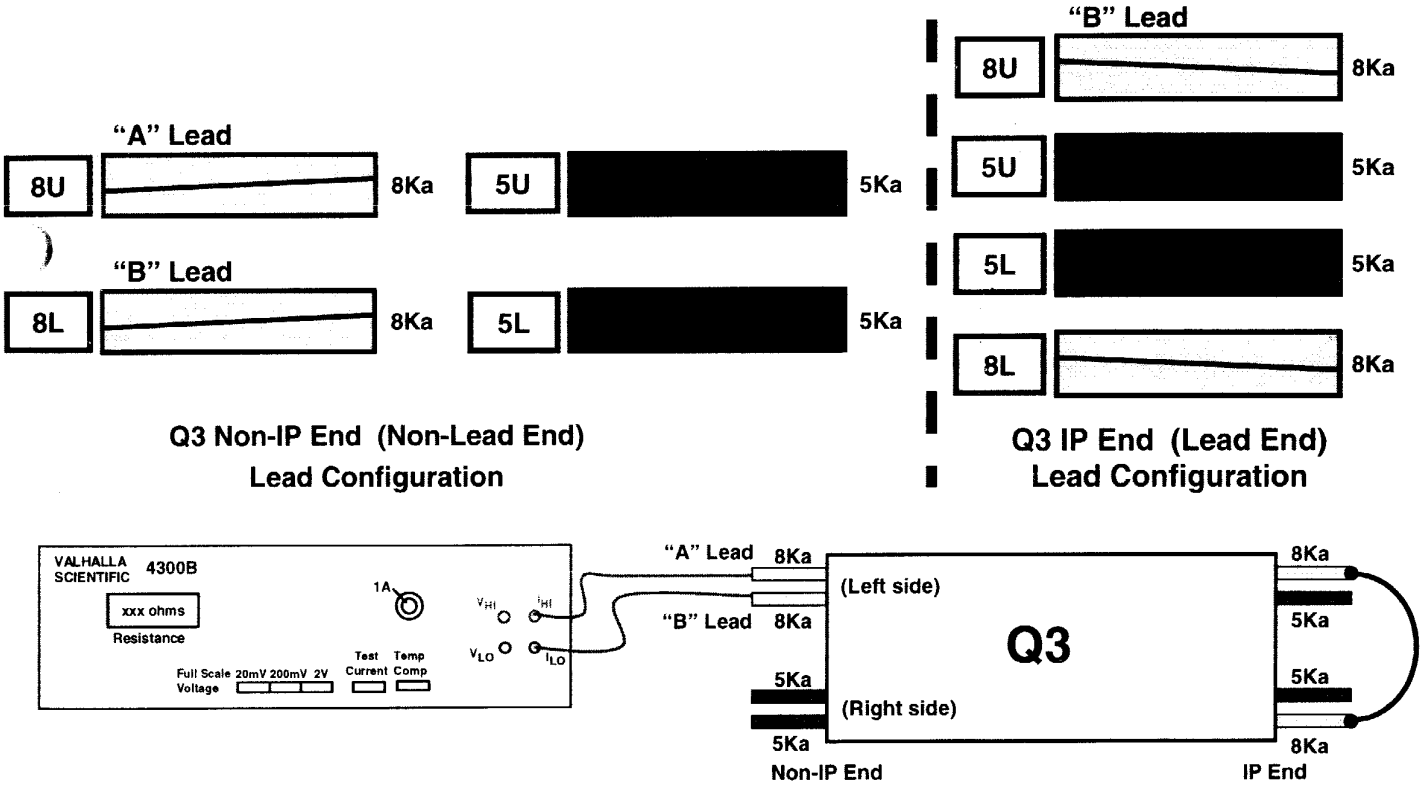

Figure 24.0-A

24.1 Measure the Resistance of the Q1 Cold Mass.

(Q3) Resistance				Nominal 3.35 to 3.45 Ω
Voltage Tap Serial Numbers				Total Resistance
Connect	Fermi	CERN	KEK	
V_{HI}	VTa1Q3	EE1113	a1	3.410 Ω
V_{LO}	VTc1Q3	EE1213	c1	
V_{HI}	VTc1Q3	EE1213	c1	3.41 Ω
V_{LO}	VTb1Q3	EE1313	b1	

				Total Resistance with Leads
				Nominal 6.75 to 6.85
V_{HI}	VTa1Q3	EE1113	a1	6.819 Ω
V_{LO}	VTb1Q3	EE1313	b1	
V_{HI}	Q4 Power Lead			6.836 Ω
V_{LO}	Q3 Power Lead			

Technician(s) _____ Date 4/3/06

24.2 Measure the resistance of Redundant Voltage Taps.

Q3 Redundant Voltage Taps				Nominal 3.35 to 3.45 Ω
Connect	Fermi	CERN	KEK	Resistance
V_{HI}	VTa2Q3	EE1123	a2	3.411 Ω
V_{LO}	VTc2Q3	EE1223	c2	
V_{HI}	VTc2Q3	EE1223	c2	3.411 Ω
V_{LO}	VTb2Q3	EE1323	b2	

Technician(s) _____ Date 4/3/06

To measure Ls and Q of a Q3 Cold Mass:

1. Use Agilent 4263B LCR Meter.
2. Turn power on by pushing line button. Wait 30 seconds until display screen is lit.
3. Recall program #1. To do this, push recall (Rcl), then push #1, then push Enter.
4. Push Auto/Hold button to release hold.
5. Verify that the frequency displayed in the upper right corner of the display screen is 1000 Hz and the level recorded in the lower right corner of the display screen is 1V or 1000 mV.
6. Connect H_{cur} to "A" power lead as shown in figure 24.0-B.
7. Connect L_{cur} to "B" power lead as shown in figure 24.0-B.
8. Connect H_{pot} and L_{pot} buttons to voltage taps as shown below.
9. Read Ls and Q from display and record in table.

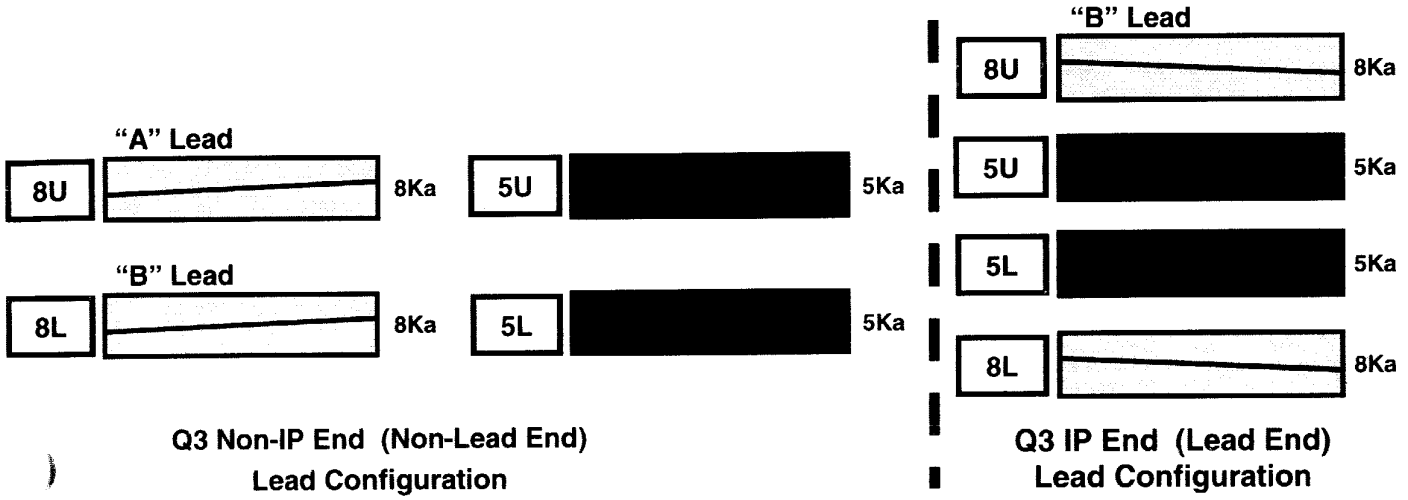

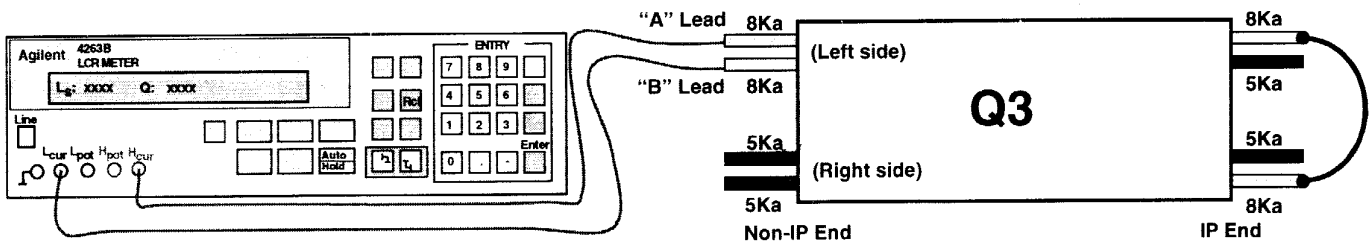

Figure 24.0-B

24.3 Measure the Inductance (Ls) of a Q1 Cold Mass.

(Q3) Inductance				Nominal 15 to 16 mH
Voltage Tap Serial Numbers				Total Inductance
Connect	Fermi	CERN	KEK	
H_{POT}	VTa1Q3	EE1113	a1	15.64 mH
L_{POT}	VTc1Q3	EE1213	c1	
H_{POT}	VTc1Q3	EE1213	c1	15.514 mH
L_{POT}	VTb1Q3	EE1313	b1	

				Nominal 30 to 32 mH
				Total Inductance
H_{POT}	VTa1Q3	EE1113	a1	31.148 mH
L_{POT}	VTb1Q3	EE1313	b1	
H_{POT}	Q4 Power Lead			31.154 mH
L_{POT}	Q3 Power Lead			

Technician(s) _____ Date 4/3/06

24.4 Measure the Q-Factor (Q) of a Q1 Cold Mass.

(Q3) Q-Factor				Nominal 1.0 to 1.2
Voltage Tap Serial Numbers				Total Q
Connect	Fermi	CERN	KEK	
H_{POT}	VTa1Q3	EE1113	a1	1.2
L_{POT}	VTc1Q3	EE1213	c1	
H_{POT}	VTc1Q3	EE1213	c1	1.1
L_{POT}	VTb1Q3	EE1313	b1	

				Nominal 1.0 to 1.2
				Total Q
H_{POT}	VTa1Q3	EE1113	a1	1.2
L_{POT}	VTb1Q3	EE1313	b1	
H_{POT}	Q4 Power Lead			1.2
L_{POT}	Q3 Power Lead			

Technician(s) _____ Date 4/3/06

To measure the resistance of a Thermometer (RTD):

1. Use Hewlett Packard HP3457A digital multimeter.
2. Record temperature of building within +/- 5 degrees.
3. Press line button to turn line on.
4. Connect wires as shown in Figure below.
   U+ (Black) to Sense HI
   I+ (Yellow) to Input HI
   U- (Red) to Sense LO
   I- (Green) to Input LO
5. Push blue button (function key) once.
6. Push OHMF button.
7. Verify arrow in readout is above the 4WΩ (meaning a 4 wire resistance measurement).
8. Read resistance in ohms and record in traveler.

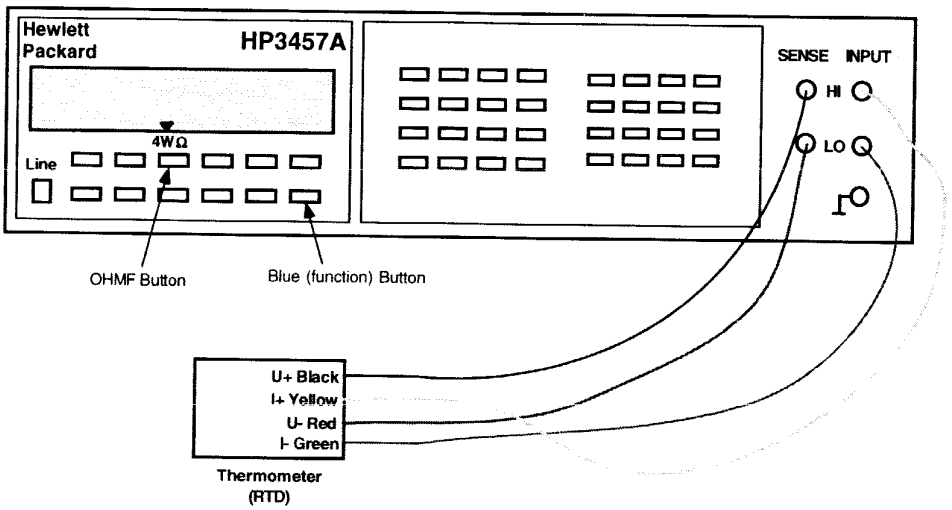

To measure the resistance of a Cryogenic (Warm-up) Heater

1. Use Hewlett Packard HP3457A digital multimeter.
2. Record temperature of building within +/- 5 degrees.
3. Press line button to turn line on.
4. Connect wires as shown in Figure below.
5. Push blue button (function key) once.
6. Push OHMF button.
7. Verify arrow in readout is above the 4WΩ (meaning a 4 wire resistance measurement).
   Note: Although this is technically a 4 wire measurement, it is effectively a 2 wire measurement, since there are only 2 wires connected to each heater.
8. Read resistance in ohms and record in traveler.

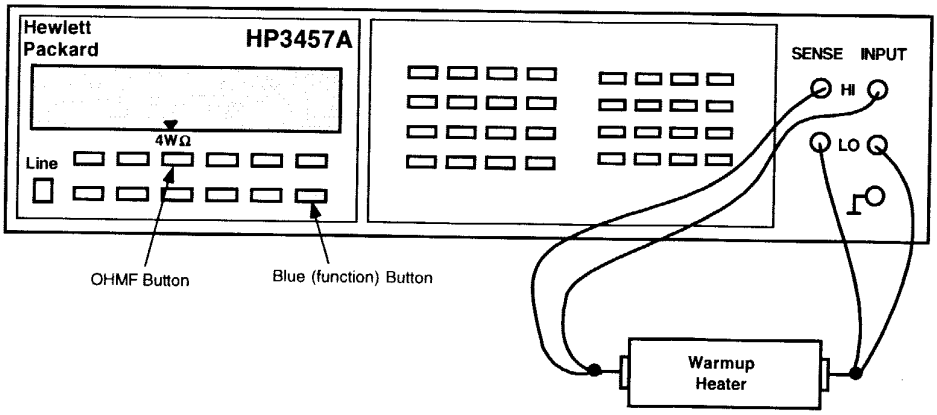

24.5 Measure the resistance of the RTD's and Cryogenic (Warm-up) Heaters. Record MFR Resistance (Expedition) for RTD's.

Q3 - RTD's and Cryogenic (warm-up) Heaters					
Temperature of Building (± 5°): 71°					
Component	**Fermi**	**CERN**	**Range**	**Resistance**	**MFR Resistance (Expedition)**
Q3 RTD, primary	TaQ3	TT8313	**60 to 70Ω**	60.28 Ω	60.41 Ω
Q3 RTD, redundant	TbQ3	TT8323	**60 to 70Ω**	59.98 Ω	60.02 Ω
Q3 Cryogenic (warm-up) Heater (LE) - wire at top (CERN #1 I+)	W1aQ3	EH8313+	**16 to 18.5Ω**	16.544 Ω	
Q3 Cryogenic (warm-up) Heater (LE) - wire at bottom (CERN #1 I-)	W2aQ3	EH8313-			
Q3 Cryogenic (warm-up) Heater (Non-LE) - wire at top (CERN #2 I+)	W1bQ3	EH8323+	**16 to 18.5Ω**	16.2 Ω	
Q3 Cryogenic (warm-up) Heater (Non-LE) - wire at bottom (CERN #2 I-)	W2bQ3	EH8323-			

Technician(s) 4/3/06 Date

24.6 Using the Hewlett Packard HP3457A digital multimeter, measure the Protection (Strip) Heater Resistance for Q3.

Q3 Protection (Strip) Heater Resistance					
Fermi	**CERN**	**KEK**	**Description**	**Limit**	**Resistance**
H1aQ3	**YT1113+**	**HA1**	**Circuit A**	**28 to 32Ω**	28.791 Ω
H2aQ3	**YT1113-**	**HA2**			
H1bQ3	**YT1123+**	**HB1**	**Circuit B**	**28 to 32Ω**	28.869 Ω
H2bQ3	**YT1123-**	**HB2**			

Technician(s) 4/3/06 Date

24.7 Check Q1 & Q2 Instrumentation Bus Wires for Continuity.

Module	Pin	Fermi	CERN	KEK	Description	Done
M2	1	VTa1Q1	EE1111	a1	Q1 Lead Voltage Tap "a" , primary	✓
M2	2	VTa2Q1	EE1121	a2	Q1 Lead Voltage Tap "a", redundant	✓
M2	3	VTc1Q1	EE1211	c1	Q1 Center Voltage Tap "c", primary	✓
M2	4	VTc2Q1	EE1221	c2	Q1 Center Voltage Tap "c", redundant	✓
M2	5	VTb1Q1	EE1311	b1	Q1 Lead Voltage Tap "b", primary	✓
M3	1	VTc1Q2a	EE1212		Q2a Center Voltage Tap "c", primary	✓
M3	3	VTa2Q2a	EE1122		Q2a lead Voltage Tap "a", redundant	✓
M3	4	VTa1Q2a	EE1112		Q2a Lead Voltage Tap "a", primary	✓
M3	5	VTb2Q1	EE1321	b2	Q1 Lead Voltage Tap "b", redundant	✓
M4	1	VTc2Q2a	EE1222		Q2a Center Voltage Tap "c", redundant	✓
M4	3	VTb1Q2a	EE1312		Q2a Lead Voltage Tap "b", primary	✓
M4	4	VTb2Q2a	EE1322		Q2a Lead Voltage Tap "b", redundant	✓
M4	5	VTb1Q2b	EE1612		Q2b lead Voltage Tap "b", primary	✓
M5	2	VTc2Q2b	EE1522		Q2b Center Voltage Tap "c", redundant	✓
M5	3	VTc1Q2b	EE1512		Q2b Center Voltage Tap "c", primary	✓
M5	5	VTb2Q2b	EE1622		Q2b Lead Voltage Tap "b" redundant	✓
M6	1	VTa1Q2b	EE1412		Q2b Lead Voltage Tap "a", primary	✓
M6	2	VTa2Q2b	EE1422		Q2b Lead Voltage Tap "a", redundant	✓
M8	1	VTH1	EE8121		Corrector voltage tap Q1-H1 (skew dipole) (on MCBX, MCBXH, A+ lead)	✓
M8	2	VTV1	EE8111		Corrector voltage tap Q1-V1 (normal dipole) (on MCBX, MCBXV A+ lead)	✓
M8	3	VTH2	EE8122		Corrector voltage tap Q2-H2 (skew dipole) (on MCBX, MCBXH, A+ lead)	✓
M8	4	VTV2	EE8112		Corrector voltage tap Q2-V2 (normal dipole) (on MCBX, MCBXV, A+ lead)	✓
M10	1	W1aQ1	EH8311+		Q1 Cryogenic Heater lead end - wire at top (CERN #1 I+)	✓
M10	2	W2aQ1	EH8311-		Q1 Cryogenic Heater lead end - wire at bottom (CERN #1 I-)	✓
M10	3	W1bQ1	EH8321+		Q1 Cryogenic Heater non-lead end - wire at top (CERN #2 I+)	✓
M10	4	W2bQ1	EH8321-		Q1 Cryogenic Heater non-lead end - wire at bottom (CERN #2 I-)	✓
M11	1	W1aQ2A	EH8312+		Q2A Cryogenic Heater lead end - wire toward cold mass end plate (CERN #1 I+)	✓
M11	2	W2aQ2A	EH8312-		Q2A Cryogenic Heater lead end - wire toward cold mass mag center (CERN #1 I-)	✓
M11	3	W1bQ2A	EH8322+		Q2A Cryogenic Heater non-lead end- wire toward cold mass end plate (CERN #2 I+)	✓

Module	Pin	Fermi	CERN	KEK	Description	Done
M11	4	W2bQ2A	EH8322-		Q2A Cryogenic Heater non-lead end- wire toward cold mass mag center (CERN #2 I-)	✓
M12	1	W1aQ2B	EH8332+		Q2B Cryogenic Heater lead end - wire toward cold mass end plate (CERN #1 I+)	✓
M12	2	W2aQ2B	EH8332-		Q2B Cryogenic Heater lead end - wire toward cold mass mag center (CERN #1 I-)	✓
M12	3	W1bQ2B	EH8342+		Q2B Cryogenic Heater non-lead end- wire toward cold mass end plate (CERN #2 I+)	✓
M12	4	W2bQ2B	EH8342-		Q2B Cryogenic Heater non-lead end- wire toward cold mass mag center (CERN #2 I-)	✓
M14	1	H1aQ1	YT1111+	HA1	Q1 Protection (Strip) Heater, ("a" circuit) (CERN lead #1+)	✓
M14	3	H2aQ1	YT1111-	HA2	Q1Protection (Strip) Heater, ("a" circuit) (CERN lead #1-)	✓
M14	5	H1bQ1	YT1121+	HB1	Q1 Protection (Strip) Heater, ("b" circuit) (CERN lead #2+)	✓
M15	2	H1aQ2a	YT1112+		Q2a Protection (Strip) Heater, 1-4 & 2-3 circuit (FNAL lead A+) (CERN lead #1+)	✓
M15	4	H2bQ1	YT1121-	HB2	Q1 Protection (Strip) Heater, ("b" circuit) (CERN lead #2-)	✓
M16	1	H2aQ2a	YT1112-		Q2a Protection (Strip) Heater, 1-4 & 2-3 circuit (FNAL lead A-) (CERN lead #1-)	✓
M16	3	H1bQ2a	YT1122+		Q2a Protection (Strip) Heater, 1-2 & 3-4 circuit (FNAL lead B+) (CERN lead#2+)	✓
M16	5	H2bQ2a	YT1122-		Q2a Protection (Strip) Heater, 1-2 & 3-4 circuit (FNAL lead B-) (CERN lead #2-)	✓
M17	2	H2aQ2b	YT1132-		Q2b Protection (Strip) Heater, 1-4 & 2-3 circuit (FNAL lead A-) (CERN lead #1-)	✓
M17	4	H1aQ2b	YT1132+		Q2b Protection (Strip) Heater, 1-4 & 2-3 circuit (FNAL lead A+) (CERN lead #1+)	✓
M18	1	H1bQ2b	YT1142+		Q2b Protection (Strip) Heater, 1-2 & 3-4 circuit (FNAL lead B+) (CERN lead#2+)	✓
M18	3	H2bQ2b	YT1142-		Q2b Protection (Strip) Heater, 1-2 & 3-4 circuit (FNAL lead B-) (CERN lead #2-)	✓
M20	1	TaQ1_I+	TT8311 I+		Q1 RTD, primary Wire color: Yellow	✓
M20	2	TaQ1_I-	TT8311 I-		Q1 RTD, primary Wire color: Green	✓
M20	3	TaQ1_V+	TT8311 U+		Q1 RTD, primary Wire color: Black	✓
M20	4	TaQ1_V-	TT8311 U-		Q1 RTD, primary Wire color: Red	✓
M20	5	TbQ1_I+	TT8321 I+		Q1 RTD, redundant: Wire color: Yellow	✓
M20	6	TbQ1_I-	TT8321 I-		Q1 RTD, redundant: Wire color: Green	✓
M20	11	TbQ1_V+	TT8321 U+		Q1 RTD, redundant: Wire color: Black	✓
M20	10	TbQ1_V-	TT8321 U-		Q1 RTD, redundant: Wire color: Red	✓
M20	9	TaQ2a_I+	TT8312 I+		Q2a RTD, primary Wire color: Yellow	✓
M20	8	TaQ2a_I-	TT8312 I-		Q2a RTD, primary Wire color: Green	✓

Module	Pin	Fermi	CERN	KEK	Description	Done
M20	7	TaQ2a_V+	TT8312 U+		Q2a RTD, primary Wire color: Black	✓
M20	12	TaQ2a_V-	TT8312 U-		Q2a RTD, primary Wire color: Red	✓
M20	13	TbQ2a_I+	TT8322 I+		Q2a RTD, redundant: Wire color: Yellow	✓
M20	14	TbQ2a_I-	TT8322 I-		Q2a RTD, redundant: Wire color: Green	✓
M20	15	TbQ2a_V+	TT8322 U+		Q2a RTD, redundant: Wire color: Black	✓
M20	16	TbQ2a_V-	TT8322 U-		Q2a RTD, redundant: Wire color: Red	✓
M21	1	TaQ2b_I+	TT8332 I+		Q2b RTD, primary Wire color: Yellow	✓
M21	2	TaQ2b_I-	TT8332 I-		Q2b RTD, primary Wire color: Green	✓
M21	3	TaQ2b_V+	TT8332 U+		Q2b RTD, primary Wire color: Black	✓
M21	4	TaQ2b_V-	TT8332 U-		Q2b RTD, primary Wire color: Red	✓
M21	5	TbQ2b_I+	TT8342 I+		Q2b RTD, redundant: Wire color: Yellow	✓
M21	6	TbQ2b_I-	TT8342 I-		Q2b RTD, redundant: Wire color: Green	✓
M21	11	TbQ2b_V+	TT8342 U+		Q2b RTD, redundant: Wire color: Black	✓
M21	10	TbQ2b_V-	TT8342 U-		Q2b RTD, redundant: Wire color: Red	✓

Technician(s) — Date: 4/3/06

Responsible Authority/Physicist — Date: 06-APR-2006

24.8 Using the Valhalla 4300B, connect 10mA applied voltage thru the corrector Power Leads. Measure Resistance and record in the table below. Record Initial resistance of Corrector Element and record below.

Corrector Bus Leads

	V3A	V3B	H3A	H3B	B3A	B3B	B6A	B6B	
	V2A	V2B	H2A	H2B	B4A	B4B	A4A	A4B	
	V1A	V1B	H1A	H1B	A2A	A2B	A3A	A3B	

(View Looking from DFBX into Q3)

Corrector Element	Readout Labels		Power Labels		Resistance	Nominal Resistance
			I_{HI}	I_{LO}		
MQSX	A2A	EE8223	A2A	A2B	~~.006~~ .062	.057 to .063Ω
	EE8223	A2B			7.604	7.22 to 7.98Ω
	A2A	A2B			7.667	7.20 to 7.96Ω
MCBXV	V3A	EE8113	V3A	V3B	.014	.010 to .025Ω
	EE8113	V3B			17.385	16.57 to 18.32Ω
	V3A	V3B			17.4	16.56 to 18.31Ω
MCBXH	H3A	EE8123	H3A	H3B	.02	.010 to .025Ω
	EE8123	H3B			21.3	20.35 to 22.50Ω
	H3A	H3B			21.31	20.35 to 22.50Ω
MCTX	B6A	EE8613	B6A	B6B	.02	.010 to .025Ω
	EE8613	B6B			98.5	93.45 to 103.29Ω
	B6A	B6B			98.52	93.33 to 103.15Ω
MCSX	B3A	EE8313	B3A	B3B	.02	.010 to .025Ω
	EE8313	B3B			27.79	26.47 to 29.26Ω ←
	B3A	B3B			27.81	26.45 to 29.23Ω
MCOSX	A4A	EE8423	A4A	A4B	.01	.009 to .011Ω
	EE8423	A4B			11.91	11.18 to 12.36Ω
	A4A	A4B			11.92	11.12 to 12.29Ω
MCOX	B4A	EE8413	B4A	B4B	.01	.010 to .025Ω
	EE8413	B4B			12.93	11.86 to 13.11Ω
	B4A	B4B			12.95	12.16 to 13.45Ω
MCSSX	A3A	EE8323	A3A	A3B	~~X~~.02	.009 to .011Ω
	EE8323	A3B			13.46	11.59 to 13.81Ω
	A3A	A3B			13.47	12.66 to 14.00Ω

Technician(s) 4-4-06 Date

24.9 Hipot the Cable Busses according to tables below. Hipots are done @ 3kV. Hold for 30 seconds. Maximum Leakage is 3 μA.

DR 4342

Ramp Rate	Hi Potential (3000 V)	Grounded	Leakage
10 V/sec	8L	Everything else	98 nA
10 V/sec	5L	Everything else	failed @ 2800 V ARC *
10 V/sec	5U	Everything else	86 nA
3 V/sec. Coil - Ground Coil - Strip Htrs	8U	Everything else	96 nA
3 V/sec. Strip Htrs - Ground Strip Htrs - Coil	Strip Heaters	Everything else	618 nA

Technician(s) _____ Date 4/3/06

* hipotted 5U to 5L w/out any other components "in the loop". Failed @ 2700 V

hipotted 5L to everything Except 5U, passed @ 103 nA leakage

24.10 Hipot according to tables below.

Final Q3 Corrector and Bus Hipots

Looking into Non-IP End of Q3

Looking from DFBX to Q3

Gray – 500V | Others – 0V | ### Others – 0V

MCBXA		V3A	V3B	H3A	H3B	B3A	B3B	B6A	B6B	
Q2		V2A	V2B	H2A	H2B	B4A	B4B	A4A	A4B	
Q1		V1A	V1B	H1A	H1B	A2A	A2B	A3A	A3B	
						MQSX		MCSOX		

MCBXA
MCSOX

This shows the corrector bus in its final configuration as it enters the DFBX

Need to verify that there is no continuity between any of these paths

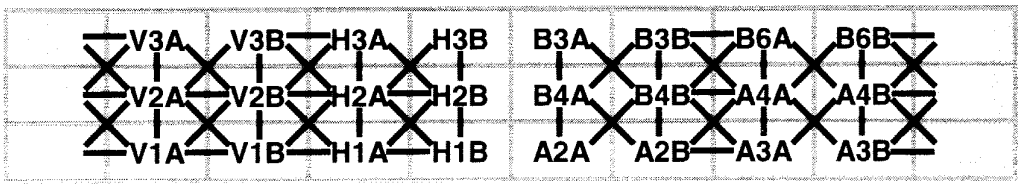

Measurement

Hipot #1
Gray – 500V
Others – 0V

	V3A	V3B	H3A	H3B	B3A	B3B	B6A	B6B	
	V2A	V2B	H2A	H2B	B4A	B4B	A4A	A4B	
	V1A	V1B	H1A	H1B	A2A	A2B	A3A	A3B	

.012 µA

Hipot #2
Gray – 500V
Others – 0V

	V3A	V3B	H3A	H3B	B3A	B3B	B6A	B6B	
	V2A	V2B	H2A	H2B	B4A	B4B	A4A	A4B	
	V1A	V1B	H1A	H1B	A2A	A2B	A3A	A3B	

.066 µA

Hipot #3
Gray – 500V
Others – 0V

	V3A	V3B	H3A	H3B	B3A	B3B	B6A	B6B	
	V2A	V2B	H2A	H2B	B4A	B4B	A4A	A4B	
	V1A	V1B	H1A	H1B	A2A	A2B	A3A	A3B	

.039 µA

Hipot #4
Gray – 500V
Others – 0V

	V3A	V3B	H3A	H3B	B3A	B3B	B6A	B6B	
	V2A	V2B	H2A	H2B	B4A	B4B	A4A	A4B	
	V1A	V1B	H1A	H1B	A2A	A2B	A3A	A3B	

.035 µA

Final Q3 Corrector and Bus Hipots

Looking into Non-IP End of Q3

Looking from DFBX to Q3

Measurement

Hipot #5
Gray – 500V
Others – 0V

	V3A	V3B	H3A	H3B	B3A	B3B	B6A	B6B
	V2A	V2B	H2A	H2B	B4A	B4B	A4A	A4B
	V1A	V1B	H1A	H1B	A2A	A2B	A3A	A3B

.032 µA

Hipot #6
Gray – 500V
Others – 0V

	V3A	V3B	H3A	H3B	B3A	B3B	B6A	B6B
	V2A	V2B	H2A	H2B	B4A	B4B	A4A	A4B
	V1A	V1B	H1A	H1B	A2A	A2B	A3A	A3B

.027 µA

Hipot #7
Gray – 500V
Others – 0V

	V3A	V3B	H3A	H3B	B3A	B3B	B6A	B6B
	V2A	V2B	H2A	H2B	B4A	B4B	A4A	A4B
	V1A	V1B	H1A	H1B	A2A	A2B	A3A	A3B

.026 µA

Technician(s) [illegible]

Date 4/14/06

15.0 Dome Setup

15.1 Attach IP End Dome (MD-390221) (Q3) to the End Dome Positioning Fixture (MD-369776).

N/A
Technician(s) Date

15.2 Align IP End Dome (MD-390221) as shown in Q3 Cold Mass Welded Assembly (ME-390529).

N/A
Technician(s) Date

15.3 Level the IP End Dome (MD-390221) using the Ball Socket (MD-369777) and the Mini Level.

N/A
Technician(s) Date

15.4 Mark the IP End Dome (MD-390221) and the End Plate with a Horizontal Witness Line. This Step will be used in Step 13.3 to reposition the Domes prior to Welding.

N/A
Technician(s) Date

15.5 Remove the IP End Dome (MD-390221) from the Tooling.

N/A
Technician(s) Date

15.6 While feeding the electrical wires/bus through the proper ports, attach Non-IP End Dome (MD-390668) (Q3) to the End Dome Positioning Fixture (MD-369776).

Technician(s) Date 4-7-06

15.7 Align Non-IP End Dome (MD-390668) as shown in Q3 Cold Mass Welded Assembly (ME-390529).

Technician(s) Date 4-7-06

15.8 Level the Non-IP End Dome (MD-390668) using the Ball Socket (MD-369777) and the Mini Level.

Technician(s) Date 4-7-06

15.9 Mark the Non-IP End Dome (MD-390668) and the End Plate with a Horizontal Witness Line. This Step will be used in Step 20.1 to reposition the Extension Tubes prior to Welding.

N/A
Technician(s) Date

15.10 Remove the Non-IP End Dome (MD- 390668) from the Tooling.

N/A

Technician(s) _____ Date _____

15.11 Perform preliminary reference measurements before moving the Cold Mass to an Assembly Table.

Check one (Upper / Lower slash) and then record the reference measurement and Mini-level No.

Upper Slash ☐

Lower Slash ☐

Take measurement while looking from Non-Lead End toward the Lead End.

Reference Measurement: _____

Mini-level No. _____

N/A

Technician(s) _____ Date _____

N/A

Responsible Authority/Physicist _____ Date _____

15.12 Move the Cold Mass to an Assembly Table.

N/A

Technician(s) _____ Date _____

16.0 Routing the Power Leads

16.1 Route Cable and Corrector Leads on IP (Lead) End as shown below and per Q3 Module Assembly (ME-369900).

Lead Bus Orientation through Q3

R. Bossert 3-29-04

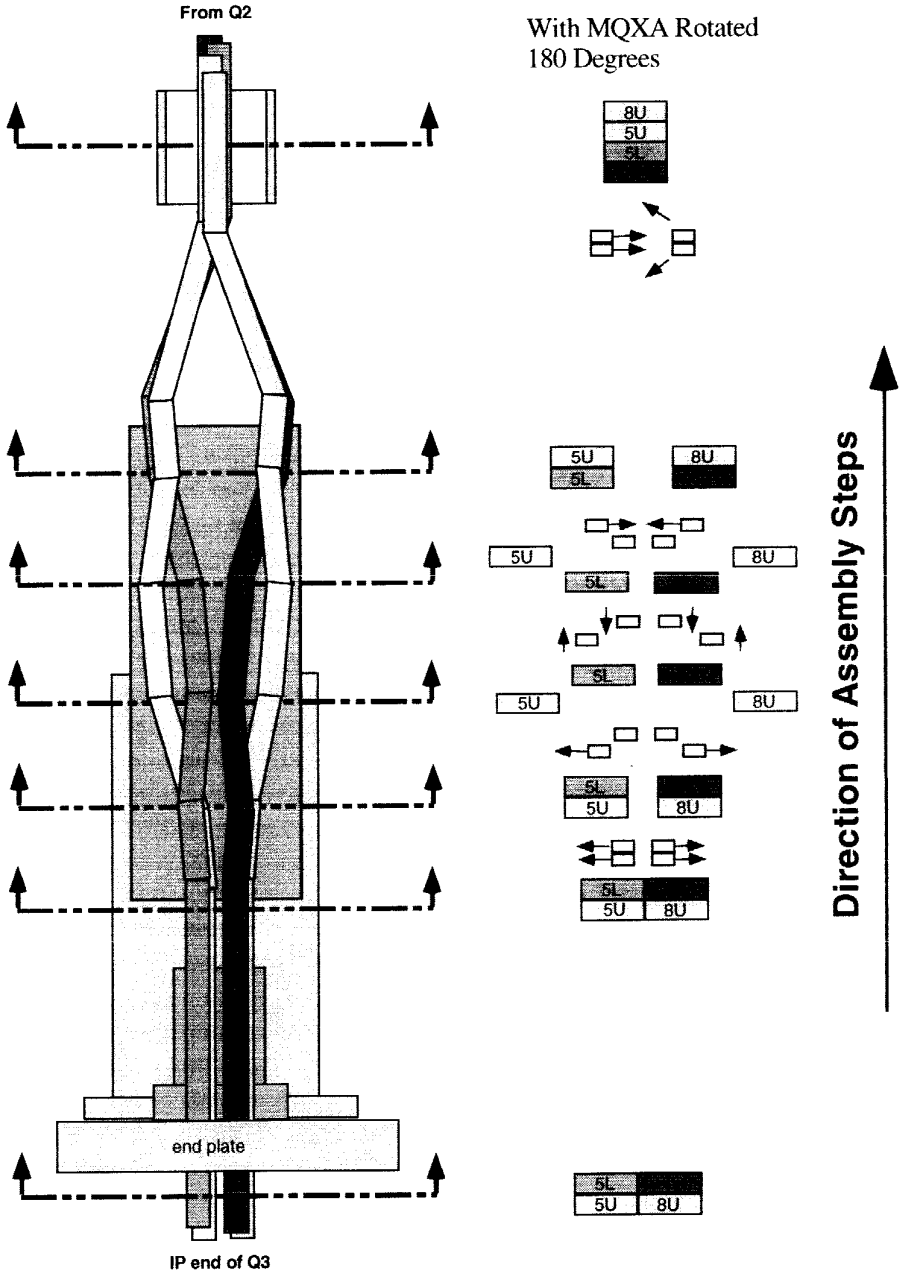

Figure 16.1-A

N/A
Technician(s)

Date

16.2 At the IP End, attach Spider Assembly (MD-430072) as per Q3 Module Assembly (ME-369900).

N/A

Technician(s) Date

16.3 Attach Non-IP End Bus Crossover Block Assembly (MD-430081) as per Q3 Module Assembly (ME-369900).

N/A

Technician(s) Date

17.0 Mount MCSOX Bus and Expansion Loop Hardware

17.1 Mount the Side Cable Clamp Assembly (ME-430103) as per Q3 Module Assembly (ME-369900).

N/A

Technician(s) _____ Date _____

17.2 Mount the Non-IP (Non-Lead End) Corrector Bus Bundle Bracket (ME-430134) as per Q3 Module Assembly (ME-369900).

N/A

Technician(s) _____ Date _____

18.0 Assemble Bus and Expansion Loop on Non-IP (Non-Lead) End

18.1 Route Non-IP End cables into crossover assembly on Non-IP End as shown in figure 18.1-A.

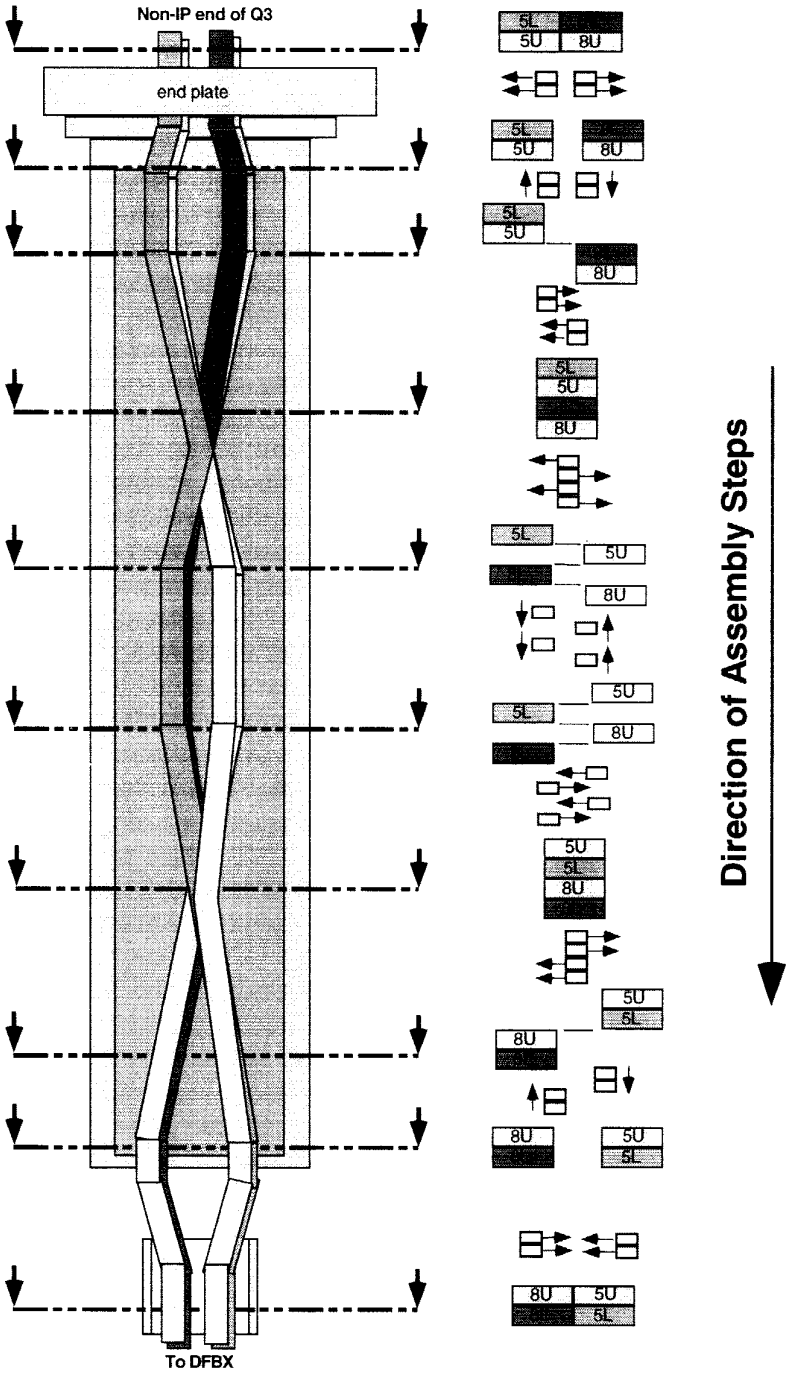

Figure 18.1-A

N/A

Technician(s) _____ Date _____

18.2 Configure Bus Expansion Loop as per Q3 Module Assembly (ME-369900).

N/A

Technician(s) _____ Date _____

18.3 At the Non-IP End, attach Spider Assembly (MB-430096) as per Q3 Module Assembly (ME-369900).

N/A

Technician(s) _____ Date _____

19.0 Electrical Inspection

Perform an electrical inspection on each of the Individual Quadrants and the Cold Mass. Refer to the Valhalla and Leader Free Standing Coil Measurement Procedure (ES-292306).

To measure the Resistance of a Q3 Cold Mass:

1. Use Valhalla Scientific 4300B digital micro-ohmmeter.
2. Set Test Current to 0.1 amp.
3. Set Scale to 2V full scale.
4. Turn temperature compensation on.
5. Turn test current off.
6. Connect I_{HI} to "A" Lead as shown in figure 18.1-A.
7. Connect I_{LO} to "B" Lead as shown in figure 18.1-A.
8. Turn test current on.
9. Connect V_{HI} and V_{LO} to voltage taps as shown in resistance table.
10. To measure Total with leads, connect V_{HI} to "A" Lead and V_{LO} to "B" Lead.
11. At the IP End, jumper the 8Ka leads as shown in Figure 18.1-A.
12. Read resistance and record in traveler.

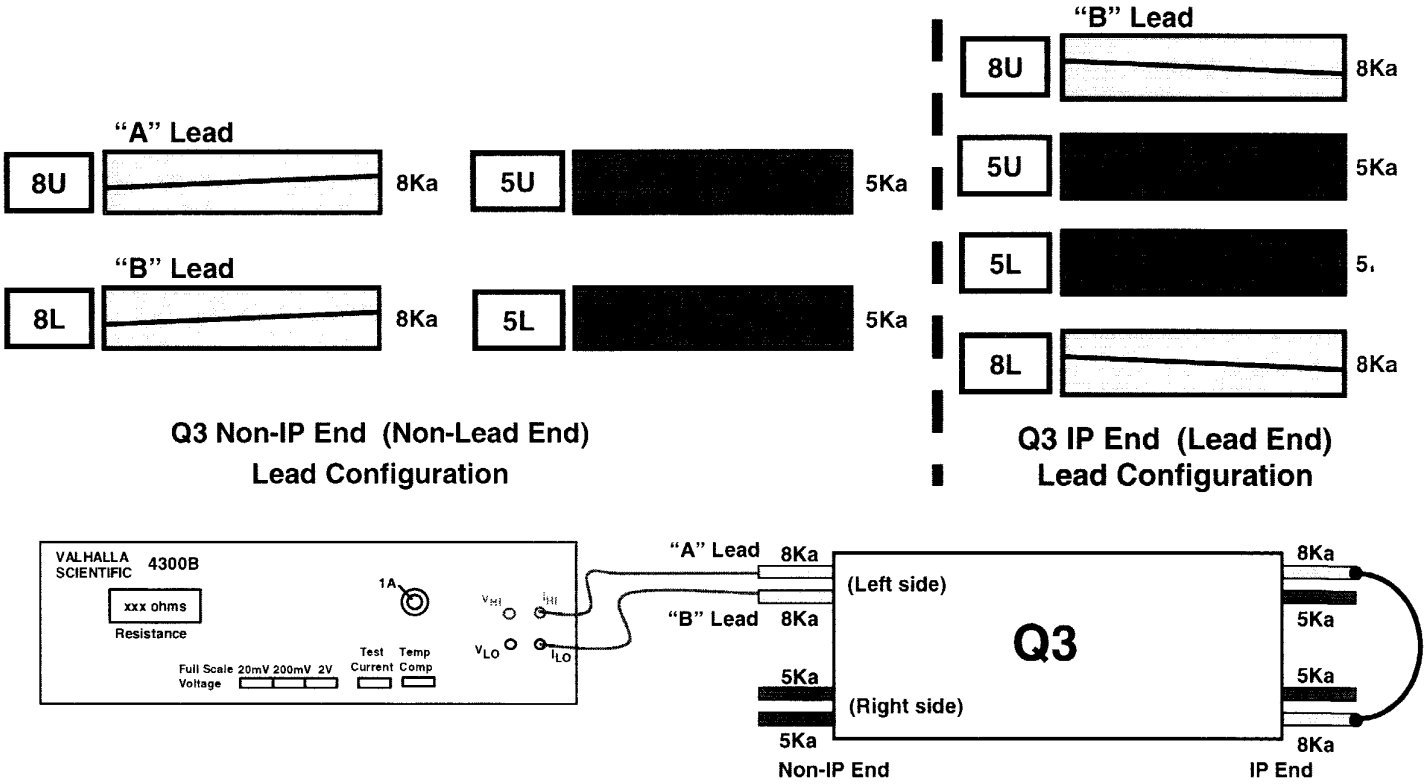

Figure 19.0-A

19.1 Measure the Resistance of the Q1 Cold Mass.

(Q3) Resistance				Nominal 3.35 to 3.45 Ω
				Total Resistance
Connect	Fermi	CERN	KEK	
V_{HI}	VTa1Q3	EE1113	a1	
V_{LO}	VTc1Q3	EE1213	c1	Ω
V_{HI}	VTc1Q3	EE1213	c1	
V_{LO}	VTb1Q3	EE1313	b1	Ω

				Total Resistance with Leads
				Nominal 6.75 to 6.85 Ω
V_{HI}	VTa1Q3	EE1113	a1	
V_{LO}	VTb1Q3	EE1313	b1	Ω
V_{HI}	Q4 Power Lead			
V_{LO}	Q3 Power Lead			Ω

Technician(s) _____ Date _____

19.2 Measure the resistance of Redundant Voltage Taps.

Q3 Redundant Voltage Taps				Nominal 3.35 to 3.45 Ω
Connect	Fermi	CERN	KEK	Resistance
V_{HI}	VTa2Q3	EE1123	a2	
V_{LO}	VTc2Q3	EE1223	c2	Ω
V_{HI}	VTc2Q3	EE1223	c2	
V_{LO}	VTb2Q3	EE1323	b2	Ω

Technician(s) _____ Date _____

To measure Ls and Q of a Q3 Cold Mass:

1. Use Agilent 4263B LCR Meter.
2. Turn power on by pushing line button. Wait 30 seconds until display screen is lit.
3. Recall program #1. To do this, push recall (Rcl), then push #1, then push Enter.
4. Push Auto/Hold button to release hold.
5. Verify that the frequency displayed in the upper right corner of the display screen is 1000 Hz and the level recorded in the lower right corner of the display screen is 1V or 1000 mV.
6. Connect H_{cur} to "A" power lead as shown in figure 19.0-B.
7. Connect L_{cur} to "B" power lead as shown in figure 19.0-B.
8. Connect H_{pot} and L_{pot} buttons to voltage taps as shown below.
9. Read Ls and Q from display and record in table.

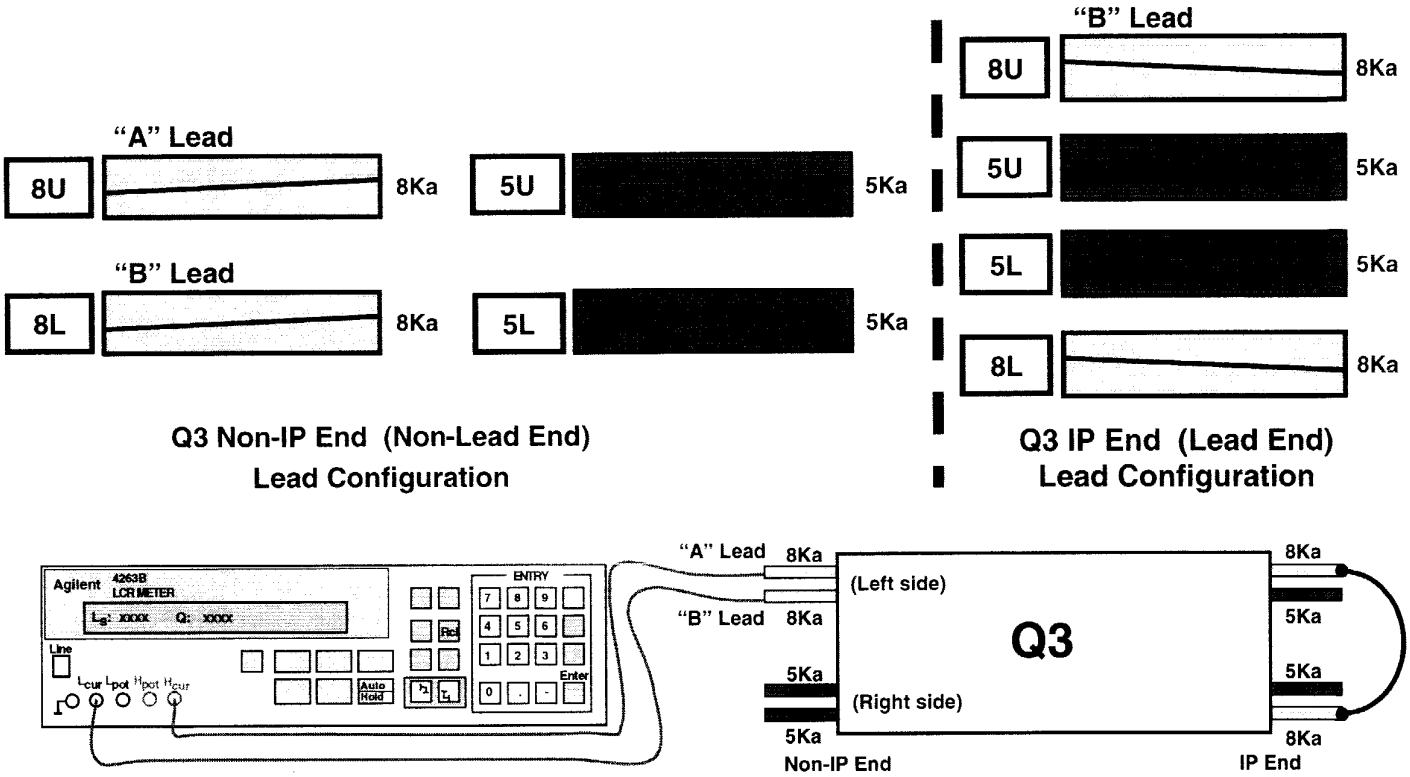

Figure 19.0-B

19.3 Measure the Inductance (Ls) of a Q1 Cold Mass.

(Q3) Inductance				Nominal 15 to 16 mH
				Total Inductance
Connect	Fermi	CERN	KEK	
H_{POT}	VTa1Q3	EE1113	a1	
L_{POT}	VTc1Q3	EE1213	c1	mH
H_{POT}	VTc1Q3	EE1213	c1	
L_{POT}	VTb1Q3	EE1313	b1	mH

				Nominal 30 to 32 mH
				Total Inductance
H_{POT}	VTa1Q3	EE1113	a1	
L_{POT}	VTb1Q3	EE1313	b1	mH
H_{POT}	Q4 Power Lead			
L_{POT}	Q3 Power Lead			mH

Technician(s) _____ Date _____

19.4 Measure the Q-Factor (Q) of a Q1 Cold Mass.

(Q3) Q-Factor				Nominal 1.0 to 1.2
				Total Q
Connect	Fermi	CERN	KEK	
H_{POT}	VTa1Q3	EE1113	a1	
L_{POT}	VTc1Q3	EE1213	c1	
H_{POT}	VTc1Q3	EE1213	c1	
L_{POT}	VTb1Q3	EE1313	b1	

				Nominal 1.0 to 1.2
				Total Inductance
H_{POT}	VTa1Q3	EE1113	a1	
L_{POT}	VTb1Q3	EE1313	b1	
H_{POT}	Q4 Power Lead			
L_{POT}	Q3 Power Lead			

Technician(s) _____ Date _____

To measure the resistance of a Thermometer (RTD):

1. Use Hewlett Packard HP3457A digital multimeter.
2. Record temperature of building within +/- 5 degrees.
3. Press line button to turn line on.
4. Connect wires as shown in Figure below.
   U+ (Black) to Sense HI
   I+ (Yellow) to Input HI
   U- (Red) to Sense LO
   I- (Green) to Input LO
5. Push blue button (function key) once.
6. Push OHMF button.
7. Verify arrow in readout is above the 4WΩ (meaning a 4 wire resistance measurement).
8. Read resistance in ohms and record in traveler.

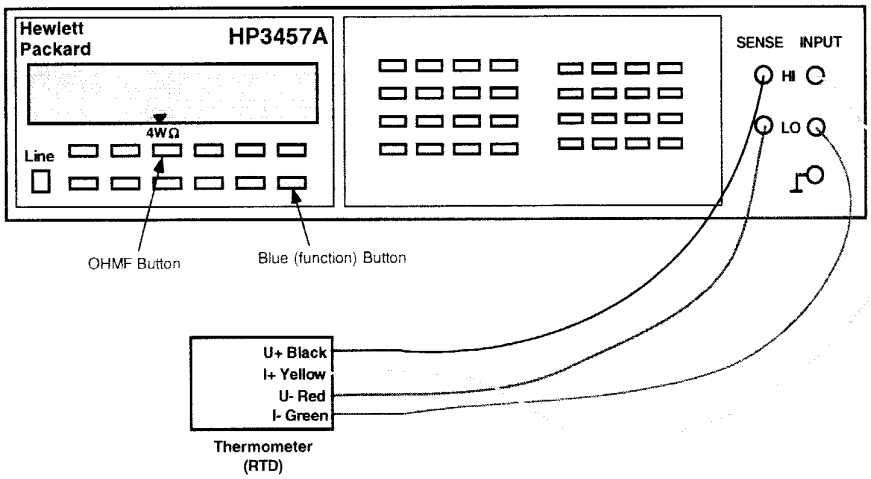

To measure the resistance of a Cryogenic (Warm-up) Heater

1. Use Hewlett Packard HP3457A digital multimeter.
2. Record temperature of building within +/- 5 degrees.
3. Press line button to turn line on.
4. Connect wires as shown in Figure below.
5. Push blue button (function key) once.
6. Push OHMF button.
7. Verify arrow in readout is above the 4WΩ (meaning a 4 wire resistance measurement).
   Note: Although this is technically a 4 wire measurement, it is effectively a 2 wire measurement, since there are only 2 wires connected to each heater.
8. Read resistance in ohms and record in traveler.

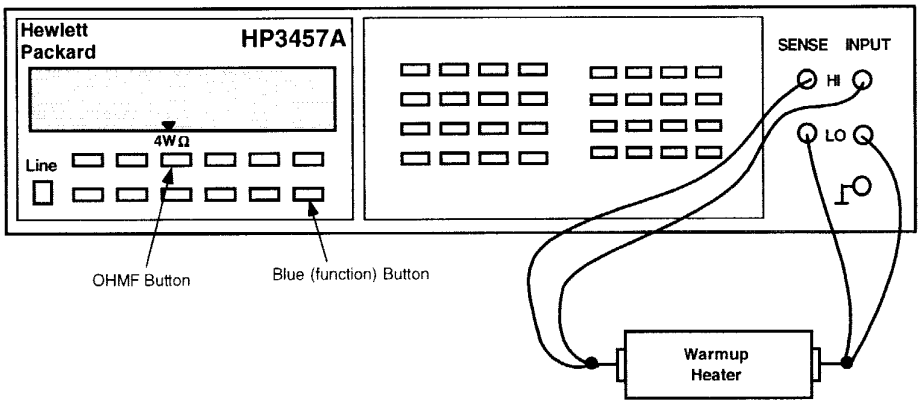

19.5 Measure the resistance of the RTD's and Cryogenic (Warm-up) Heaters. Record MFR Resistance (Expedition) for RTD's.

Q3 - RTD's and Cryogenic (warm-up) Heaters					
Temperature of Building (± 5°): _____					
Component	**Fermi**	**CERN**	**Range**	**Resistance**	**MFR's Resistance (Expedition)**
Q3 RTD, primary	TaQ3	TT8313	**60 to 70Ω**	Ω	Ω
Q3 RTD, redundant	TbQ3	TT8323	**60 to 70Ω**	Ω	Ω
Q3 Cryogenic (warm-up) Heater (LE) - wire at top (CERN #1 I+)	W1aQ3	EH8313+	**16 to 18.5Ω**	Ω	
Q3 Cryogenic (warm-up) Heater (LE) - wire at bottom (CERN #1 I-)	W2aQ3	EH8313-			
Q3 Cryogenic (warm-up) Heater (Non-LE) - wire at top (CERN #2 I+)	W1bQ3	EH8323+	**16 to 18.5Ω**	Ω	
Q3 Cryogenic (warm-up) Heater (Non-LE) - wire at bottom (CERN #2 I-)	W2bQ3	EH8323-			

_____ Technician(s)

_____ Date

19.6 Using the Hewlett Packard HP3457A digital multimeter, measure the Protection (Strip) Heater Resistance for Q3.

Q3 Protection (Strip) Heater Resistance					
Fermi	**CERN**	**KEK**	**Description**	**Limit**	**Resistance**
H1aQ3	**YT1113+**	**HA1**	**Circuit A**	**28 to 32Ω**	Ω
H2aQ3	**YT1113-**	**HA2**			
H1bQ3	**YT1123+**	**HB1**	**Circuit B**	**28 to 32Ω**	Ω
H2bQ3	**YT1123-**	**HB2**			

_____ Technician(s)

_____ Date

19.7 Using the Valhalla 4300B, connect 10mA applied voltage thru the corrector Power Leads. Measure Resistance and record in the table below.

Corrector Bus Leads

	V3A	V3B	H3A	H3B	B3A	B3B	B6A	B6B	
	V2A	V2B	H2A	H2B	B4A	B4B	A4A	A4B	
	V1A	V1B	H1A	H1B	A2A	A2B	A3A	A3B	

(View Looking from DFBX into Q3)

Corrector Element	Readout Labels		Power Labels		Resistance	Nominal Resistance
			I_{HI}	I_{LO}		
MQSX	A2A	EE8223	A2A	A2B		.057 to .063Ω
	EE8223	A2B				7.22 to 7.98Ω
	A2A	A2B				7.20 to 7.96Ω
MCBXV	V3A	EE8113	V3A	V3B		.010 to .025Ω
	EE8113	V3B				16.57 to 18.32Ω
	V3A	V3B				16.56 to 18.31Ω
MCBXH	H3A	EE8123	H3A	H3B		.010 to .025Ω
	EE8123	H3B				20.35 to 22.50Ω
	H3A	H3B				20.35 to 22.50Ω
MCTX	B6A	EE8613	B6A	B6B		.010 to .025Ω
	EE8613	B6B				93.45 to 103.29Ω
	B6A	B6B				93.33 to 103.15Ω
MCSX	B3A	EE8313	B3A	B3B		.010 to .025Ω
	EE8313	B3B				26.47 to 29.26Ω
	B3A	B3B				26.45 to 29.23Ω
MCOSX	A4A	EE8423	A4A	A4B		.009 to .011Ω
	EE8423	A4B				11.18 to 12.36Ω
	A4A	A4B				11.12 to 12.29Ω
MCOX	B4A	EE8413	B4A	B4B		.010 to .025Ω
	EE8413	B4B				11.86 to 13.11Ω
	B4A	B4B				12.16 to 13.45Ω
MCSSX	A3A	EE8323	A3A	A3B		.009 to .011Ω
	EE8323	A3B				11.59 to 13.81Ω
	A3A	A3B				12.66 to 14.00Ω

Technician(s) _____ Date _____

19.8 Attach Backing Splines as per Q3 Module Assembly (ME-369900).

Technician(s) _____ Date _____

19.9 At the IP End (Lead End) wrap the Springboard Assemblies in Kapton and then wrap with Kevlar String (MA-369912) every ½ - ¾" over Kapton as per Q3 Module Assembly (ME-369900).

Technician(s) _____ Date _____

19.10 At the Non-IP End (Non-Lead End) wrap the entire Springboard Assembly in Kapton tape and then wrap the uppermost bend of magnet and corrector bus with Nomex. Wrap the entire springboard with white glass tape followed by Kevlar String (MA-369912) every ½ - ¾" as per Q3 Module Assembly (ME-369900).

Technician(s) _____ Date _____

20.0 Beam Tube Insertion

20.1 Inspect the Beam Tube (MC-369522) for damage. Clean Beam Tube using lint free Heavy Duty Wipers (Fermi stock 1660-0150) and Isopropyl Alcohol (Fermi stock 1920-0300) as per Insulated Beam Tube Assembly for Q3 (MD-369838).

Technician(s) _____ Date _____

20.2 Using Insertion Tooling, insert the Beam Tube (MC-369522) into the Magnet Assembly as per Beam Tube Insertion Tooling (MD-369789).

Technician(s) _____ Date _____

20.3 Place a mark 45mm from the Kapton insulation on Non-IP End of the Beam Tube.

Technician(s) _____ Date _____

20.4 Verify that the placement of the mark in Step 20.3 is correct.

Crew Chief _____ Date _____

20.5 Using the Wachs Cutter, cut the Non-IP End of the Beam Tube at the mark.

Technician(s) _____ Date _____

20.6 Measure the inside Beam Tube length and record this measurement below.

Step	Description	Measurement
20.6.1	**Beam Tube Length**	
	Subtract 8650mm (±2mm)	**- 8650mm**
20.6.2	**(Length to be cut from IP End)**	**=**

Technician(s) _____ Date _____

20.7 Using the number recorded in Step 20.6.2, measure and place a mark at the IP End of the Beam Tube.

Technician(s) Date

20.8 Verify that the placement of the mark in Step 20.7 is correct.

STOP

Crew Chief Date

20.9 Using the Wachs Cutter, cut the IP End of the Beam Tube at the mark.

Technician(s) Date

20.10 Measure and verify Beam Tube length is 8650mm (±2mm). Record Actual Beam Tube Length below.

Actual Beam Tube Length	

Technician(s) Date

STOP

Responsible Authority/Physicist Date

20.11 Hipot the Beam Tube to coil, heaters and ground. (5kV) (Max. Leakage < 0.5μA)

STOP

Have Crew Chief verify setup and sign below before continuing.

Crew Chief Date

Hipot	Leakage or Failure Voltage	Pass	Fail
Beam Tube to coil, heaters and ground			

Technician(s) Date

STOP

Responsible Authority/Physicist Date

21.0 Dome Installation

21.1 Reposition the IP End Dome as shown in Q3 Cold Mass Welded Assembly (ME-390529) using the Horizontal Witness Line from step 15.4.

Technician(s) _____ Date _____

21.2 Ensure Spider Assembly (MB-430096) is installed properly as per Q3 Module Assembly (ME-369900).

Responsible Authority _____ Date _____

21.3 Remove IP End Dome.

Technician(s) _____ Date _____

21.4 Tack weld the corrector mounting hardware in place as per Q3 Cold Mass Welded Assembly (ME-390529).

Weldor(s) _____ Date _____

21.5 Putty / Stycast all nuts and bolts that remain unwelded.

Technician(s) _____ Date _____

21.6 Re-install IP End Dome.

Technician(s) _____ Date _____

21.7 Mark the location that the Shipping Restraint Nuts (MC-390294) will be welded on the Non-IP End.

Technician(s) _____ Date _____

21.8 Weld the Shipping Restraint Nuts (MC-390294).

Weldor(s) _____ Date _____

21.9 Reposition the Non-IP End Extension Tube as shown in Q3 Cold Mass Welded Assembly (ME-390529) using the Horizontal Witness Line from step 15.09.

N/A

Technician(s) Date

21.10 Tack weld the Extension Tube (MD-390667) to the Cold Mass per (ME-390529).

N/A

Weldor(s) Date

21.11 Verify that the Expansion Loop has not been damaged and is functioning properly.

N/A

Technician(s) Date

21.12 Reposition the Non-IP End Dome.

Technician(s) 4-7-06
Date

21.13 Verify that the Spider Assembly (MB-430096) has not been damaged and is functioning properly.

Technician(s) 4-7-06
Date

21.14 Ensure Spider Assembly (MB-430096) is installed properly as per Q3 Module Assembly (ME-369900).

N/A

Responsible Authority Date

21.15 Tack weld the Non-IP End Dome in place at approximately 6-8 places around the Dome as per Q3 Cold Mass Welded Assembly (ME-390529).

Weldor(s) Mike R. 04/07/06
Date

21.16 Tack weld the IP End Dome in place at approximately 6-8 places around the Dome per Q3 Cold Mass Welded Assembly (ME-390529).

N/A

Weldor(s) Date

DR 4343

21.17 Hipot the Cable Busses according to tables below. Hipots are done @ 3kV. Hold for 30 seconds. Maximum Leakage is 3 μA.

Ramp Rate	Hi Potential (3000 V)	Grounded	Leakage
10 V/sec	8L	Everything else	109 μA
10 V/sec	5L	Everything else	
10 V/sec	5U	Everything else	
3 V/sec. Coil - Ground Coil - Strip Htrs	8U	Everything else	
3 V/sec. Strip Htrs - Ground Strip Htrs - Coil	Strip Heaters	Everything else	

Technician(s) _____ Date _____

19.8 Attach Backing Splines as per Q3 Module Assembly (ME-369900).

N/A

Technician(s) Date

19.9 At the IP End (Lead End) wrap the Springboard Assemblies in Kapton and then wrap with Kevlar String (MA-369912) every ½ - ¾" over Kapton as per Q3 Module Assembly (ME-369900).

N/A

Technician(s) Date

19.10 At the Non-IP End (Non-Lead End) wrap the entire Springboard Assembly in Kapton tape and then wrap the uppermost bend of magnet and corrector bus with Nomex. Wrap the entire springboard with white glass tape followed by Kevlar String (MA-369912) every ½ - ¾" as per Q3 Module Assembly (ME-369900).

Technician(s) Date

20.0 Beam Tube Insertion

20.1 Inspect the Beam Tube (MC-369522) for damage. Clean Beam Tube using lint free Heavy Duty Wipers (Fermi stock 1660-0150) and Isopropyl Alcohol (Fermi stock 1920-0300) as per Insulated Beam Tube Assembly for Q3 (MD-369838).

Technician(s) _____ Date _____

20.2 Using Insertion Tooling, insert the Beam Tube (MC-369522) into the Magnet Assembly as per Beam Tube Insertion Tooling (MD-369789).

Technician(s) _____ Date _____

20.3 Place a mark 45mm from the Kapton insulation on Non-IP End of the Beam Tube.

Technician(s) _____ Date _____

STOP

20.4 Verify that the placement of the mark in Step 20.3 is correct.

Crew Chief _____ Date _____

20.5 Using the Wachs Cutter, cut the Non-IP End of the Beam Tube at the mark.

Technician(s) _____ Date _____

20.6 Measure the inside Beam Tube length and record this measurement below.

Step	Description	Measurement
20.6.1	Beam Tube Length	
	Subtract 8650mm (±2mm)	- 8650mm
20.6.2	(Length to be cut from IP End)	=

Technician(s) _____ Date _____

20.7 Using the number recorded in Step 20.6.2, measure and place a mark at the IP End of the Beam Tube.

Technician(s) Date

20.8 Verify that the placement of the mark in Step 20.7 is correct.

STOP

Crew Chief Date

20.9 Using the Wachs Cutter, cut the IP End of the Beam Tube at the mark.

Technician(s) Date

20.10 Measure and verify Beam Tube length is 8650mm (±2mm). Record Actual Beam Tube Length below.

Actual Beam Tube Length	

Technician(s) Date

STOP

Responsible Authority/Physicist Date

20.11 Hipot the Beam Tube to coil, heaters and ground. (5kV) (Max. Leakage < 0.5μA)

STOP

Have Crew Chief verify setup and sign below before continuing.

Crew Chief Date

Hipot	Leakage or Failure Voltage	Pass	Fail
Beam Tube to coil, heaters and ground			

Technician(s) Date

STOP

Responsible Authority/Physicist Date

21.0 Dome Installation

21.1 Reposition the IP End Dome as shown in Q3 Cold Mass Welded Assembly (ME-390529) using the Horizontal Witness Line from step 15.4.

Technician(s) _____ Date _____

21.2 Ensure Spider Assembly (MB-430096) is installed properly as per Q3 Module Assembly (ME-369900).

Responsible Authority _____ Date _____

21.3 Remove IP End Dome.

Technician(s) _____ Date _____

21.4 Tack weld the corrector mounting hardware in place as per Q3 Cold Mass Welded Assembly (ME-390529).

Weldor(s) _____ Date _____

21.5 Putty / Stycast all nuts and bolts that remain unwelded.

Technician(s) _____ Date _____

21.6 Re-install IP End Dome.

Technician(s) _____ Date _____

21.7 Mark the location that the Shipping Restraint Nuts (MC-390294) will be welded on the Non-IP End.

Technician(s) _____ Date _____

21.8 Weld the Shipping Restraint Nuts (MC-390294).

Weldor(s) _____ Date _____

21.9 Reposition the Non-IP End Extension Tube as shown in Q3 Cold Mass Welded Assembly (ME-390529) using the Horizontal Witness Line from step 15.09.

Technician(s) _____ Date 4-10-06

21.10 Tack weld the Extension Tube (MD-390667) to the Cold Mass per (ME-390529).

Weldor(s) _____ Date 4/10/06

21.11 Verify that the Expansion Loop has not been damaged and is functioning properly.

Technician(s) _____ Date 4-10-06

21.12 Reposition the Non-IP End Dome.

Technician(s) _____ Date 4-10-06

21.13 Verify that the Spider Assembly (MB-430096) has not been damaged and is functioning properly.

Technician(s) _____ Date 4-10-06

21.14 Ensure Spider Assembly (MB-430096) is installed properly as per Q3 Module Assembly (ME-369900).

Responsible Authority _____ Date _____

21.15 Tack weld the Non-IP End Dome in place at approximately 6-8 places around the Dome as per Q3 Cold Mass Welded Assembly (ME-390529).

Weldor(s) _____ Date 4/10/06

21.16 Tack weld the IP End Dome in place at approximately 6-8 places around the Dome per Q3 Cold Mass Welded Assembly (ME-390529).

Weldor(s) _____ Date _____

DC 23A

21.17 Hipot the Cable Busses according to tables below. Hipots are done @ 3kV. Hold for 30 seconds. Maximum Leakage is 3 μA.

Ramp Rate	Hi Potential (3000 V)	Grounded	Leakage	After Repair, Re-Hipot [illegible]
10 V/sec	8L	Everything else	84 nA	77 nA
10 V/sec	5L	Everything else	failed @ 100 V Mapt	72 nA
10 V/sec	5U	Everything else		1 nA
3 V/sec. Coil - Ground Coil - Strip Htrs	8U	Everything else		810 nA
3 V/sec. Strip Htrs - Ground Strip Htrs - Coil	Strip Heaters	Everything else		

Technician(s) _____ Date _____

21.9 Reposition the Non-IP End Extension Tube as shown in Q3 Cold Mass Welded Assembly (ME-390529) using the Horizontal Witness Line from step 15.09.

Technician(s) _____ Date 4-11-06

21.10 Tack weld the Extension Tube (MD-390667) to the Cold Mass per (ME-390529).

Weldor(s) _____ Date 04/11/06

21.11 Verify that the Expansion Loop has not been damaged and is functioning properly.

Technician(s) _____ Date 4-11-06

21.12 Reposition the Non-IP End Dome.

Technician(s) _____ Date 4-11-06

21.13 Verify that the Spider Assembly (MB-430096) has not been damaged and is functioning properly.

Technician(s) _____ Date 4-11-06

21.14 Ensure Spider Assembly (MB-430096) is installed properly as per Q3 Module Assembly (ME-369900).

N/A

Responsible Authority _____ Date _____

21.15 Tack weld the Non-IP End Dome in place at approximately 6-8 places around the Dome as per Q3 Cold Mass Welded Assembly (ME-390529).

Weldor(s) _____ Date 04/11/06

21.16 Tack weld the IP End Dome in place at approximately 6-8 places around the Dome per Q3 Cold Mass Welded Assembly (ME-390529).

N/A

Weldor(s) _____ Date _____

21.17 Hipot the Cable Busses according to tables below. Hipots are done @ 3kV. Hold for 30 seconds. Maximum Leakage is 3 μA.

Ramp Rate	Hi Potential (3000 V)	Grounded	Leakage
10 V/sec	8L	Everything else	113 nA
10 V/sec	5L	Everything else	60 nA
10 V/sec	5U	Everything else	37 nA
3 V/sec. Coil - Ground Coil - Strip Htrs	8U	Everything else	73 MΩ
3 V/sec. Strip Htrs - Ground Strip Htrs - Coil	Strip Heaters	Everything else	662 nA

Technician(s) 4/10/06 Date

21.18 Hipot according to tables below.

Q3 Corrector and Bus Hipots

Looking into Non-IP End of Q3

Looking from DFBX to Q3

Gray – 500V | Others – 0V | ### Others – 0V

MCBXA		V3A	V3B	H3A	H3B	B3A	B3B	B6A	B6B		MCBXA
Q2		V2A	V2B	H2A	H2B	B4A	B4B	A4A	A4B		MCSOX
Q1		V1A	V1B	H1A	H1B	A2A	A2B	A3A	A3B		
						MQSX		MCSOX			

This shows the corrector bus in its final configuration as it enters the DFBX

Need to verify that there is no continuity between any of these paths

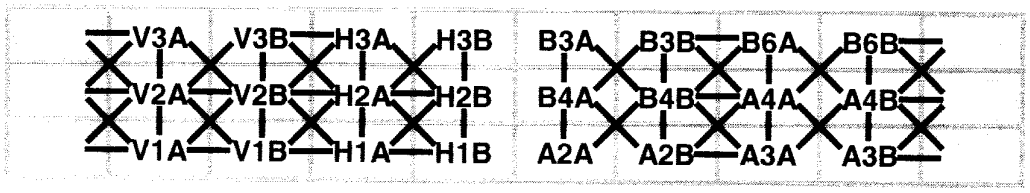

Measurement

Hipot #1
Gray – 500V
Others – 0V

	V3A	V3B	H3A	H3B	B3A	B3B	B6A	B6B	
	V2A	V2B	H2A	H2B	B4A	B4B	A4A	A4B	
	V1A	V1B	H1A	H1B	A2A	A2B	A3A	A3B	

.070 µA

Hipot #2
Gray – 500V
Others – 0V

	V3A	V3B	H3A	H3B	B3A	B3B	B6A	B6B	
	V2A	V2B	H2A	H2B	B4A	B4B	A4A	A4B	
	V1A	V1B	H1A	H1B	A2A	A2B	A3A	A3B	

.106 µA

Hipot #3
Gray – 500V
Others – 0V

	V3A	V3B	H3A	H3B	B3A	B3B	B6A	B6B	
	V2A	V2B	H2A	H2B	B4A	B4B	A4A	A4B	
	V1A	V1B	H1A	H1B	A2A	A2B	A3A	A3B	

.166 µA

Hipot #4
Gray – 500V
Others – 0V

	V3A	V3B	H3A	H3B	B3A	B3B	B6A	B6B	
	V2A	V2B	H2A	H2B	B4A	B4B	A4A	A4B	
	V1A	V1B	H1A	H1B	A2A	A2B	A3A	A3B	

.144 µA

Q3 Corrector and Bus Hipots

Looking into Non-IP End of Q3

Looking from DFBX to Q3

										Measurement
Hipot #5		V3A	V3B	H3A	H3B	B3A	B3B	B6A	B6B	
Gray – 500V		V2A	V2B	H2A	H2B	**B4A**	**B4B**	A4A	A4B	.021 µA
Others – 0V		V1A	V1B	H1A	H1B	A2A	A2B	A3A	A3B	
Hipot #6		V3A	V3B	H3A	H3B	B3A	B3B	B6A	B6B	
Gray – 500V		V2A	V2B	H2A	H2B	B4A	B4B	**A4A**	**A4B**	.055 µA
Others – 0V		V1A	V1B	H1A	H1B	A2A	A2B	A3A	A3B	
Hipot #7		V3A	V3B	H3A	H3B	B3A	B3B	B6A	B6B	
Gray – 500V		V2A	V2B	H2A	H2B	B4A	B4B	A4A	A4B	.087 µA
Others – 0V		V1A	V1B	H1A	H1B	A2A	A2B	**A3A**	**A3B**	

Technician(s) _____ Date 4/11/06

21.19 Weld the Extension Tube (MD-390667) to the Cold Mass per (ME-390529).

N/A

Weldor(s) _____ Date _____

21.20 Weld the Non-IP End Dome, skip weld around to minimize distortion as per Q3 Cold Mass Welded Assembly (ME-390529).

N/A

Weldor(s) _____ Date _____

21.21 Weld the IP End Dome, skip weld around to minimize distortion per Q3 Cold Mass Welded Assembly (ME-390529).

N/A

Weldor(s) _____ Date _____

22.13 Loosen each Suspension System Adjusting Screw (MB-390039) 1/2 turn and remove the Suspension System from the Vacuum Vessel.

Technician(s) _____ Date _____

22.14 Configure the Suspension Tooling for Q3 Assembly per Cryostat Layout Tooling & Assembly (ME-364604). Place Suspension Assembly on the tooling and make necessary adjustments to the tooling.

Technician(s) _____ Date _____

22.15 Assemble the Suspension Mounting Brackets (MD-390279) to the Support Assemblies.

Technician(s) _____ Date _____

22.16 Slide the Suspension System over the Cold Mass and place on tooling. The Suspension system may be disassembled during this step. Record shim sizes and locations prior to disassembly.

Note(s):

Ensure that the Suspension System is configured properly to the Cold Mass with respect to the IP and Non-IP Ends.

Technician(s) _____ Date _____

22.17 Verify locking collars exist only at IP End support.

Crew Chief _____ Date _____

22.18 Establish alignment between the Cold Mass and the Support system. Install shims between the Brass Slide Bars and the Stainless Steel Blocks on each support as needed.

Record Shim size and location below.

East-North _____ **East South** _____

West-North _____ **West-South** _____

Technician(s) _____ Date _____

STOP

22.19 Verify the Alignment of the Cold Mass and the Support System.

Crew Chief _____ Date _____

22.20 Weld the Cold Mass to the Outboard Cold Mass Brackets (MB-430082) as per Q3 Module Assembly (ME-390900).

Weldor(s) _____ Date _____

22.21 Add 112.5mm to the Final number recorded in Step 22.10 and record below.

Recorded average measurement from Step 22.10: _____

Add: **+ 112.5 mm**

Record New Total: _____

Technician(s) _____ Date _____

22.22 Add 337.5mm to the Final number recorded in Step 22.11 and record below.

Recorded average measurement from Step 22.11: _____

Add: **+ 337.5 mm**

Record New Total: _____

Technician(s) _____ Date _____

22.23 Position the IP End of the Beam Tube at the distance recorded in Step 22.21 from the inside surface of the IP G-10 support.

Technician(s) _____ Date _____

22.24 Measure the Non-IP End of the Beam Tube from the inside surface of the Non-IP End support. Compare this number to the number recorded in Step 22.22.

Note(s):

These numbers should be the same to within 1 mm. If these numbers differ greater than 1 mm, contact Responsible Authority/Physicist.

Record measurement here: _____

Recorded measurement from Step 22.22: _____

_____ _____
Technician(s) Date

22.25 Measure from the IP End of the Beam Tube to the Spot Face on the IP End Dome. Record below.

Record measurement here: _____

_____ _____
Technician(s) Date

22.26 Subtract 15mm from the number recorded in Step 22.25. This is the Spacer width for the IP End. Record below.

Recorded Measurement from Step 22.25: _____

Subtract: **- 15mm**

Spacer width for the IP End: _____

_____ _____
Technician(s) Date

22.27 Measure from the Non-IP End of the Beam Tube to the Spot Face on the Non-IP End Dome. Record below.

Record measurement here: _____

_____ _____
Technician(s) Date

22.28 Subtract 15mm from the number recorded in Step 22.27. This is the Spacer width for the Non-IP End. Record below.

Recorded Measurement from Step 22.27: _____

Subtract: **- 15mm**

Spacer width for the Non-IP End: _____

_____ _____
Technician(s) Date

23.0 Cold Bore

23.1 Position the Beam Tube (MC-369522) longitudinally per Q3 Cold Mass Welded Assembly (ME-390529).

N/A

Technician(s) Date

23.2 Flare both ends of the Beam Tube using Flaring Tool (MC-390416) per Q3 Cold Mass Welded Assembly (ME-390529).

N/A

Technician(s) Date

23.3 Add Spacer between Beam Tube Flange and IP End Dome, if necessary.

Spacer Added? **Yes** ☑ **No** ☐

Technician(s) Date 4-12-06

23.4 Position Beam Tube Flange (MC-390538) over the Beam Tube and onto IP End Dome per Q3 Cold Mass Welded Assembly (ME-390529).

N/A

Technician(s) Date 4-12-06

23.5 Weld the Beam Tube to the Flange at IP End as per Q3 Cold Mass Welded Assembly (ME-390529).

N/A

Weldor(s) Date

23.6 Position the Beam Tube Flange (MC-390538) over the Beam Tube and onto the Non-IP End Dome (Q3) per Q3 Cold Mass Welded Assembly (ME-390529).

Technician(s) Date 4-12-06

23.7 Weld Beam Tube to Flange at Non-IP End as per Q3 Cold Mass Welded Assembly (ME-390529).

Weldor(s) Date 4/12/06

24.0 Electrical Inspection

Perform an electrical inspection on each of the Individual Quadrants and the Cold Mass. Refer to the Valhalla and Leader Free Standing Coil Measurement Procedure (ES-292306).

To measure the Resistance of a Q3 Cold Mass:

1. Use Valhalla Scientific 4300B digital micro-ohmmeter.
2. Set Test Current to 0.1 amp.
3. Set Scale to 2V full scale.
4. Turn temperature compensation on.
5. Turn test current off.
6. Connect I_{HI} to "A" Lead as shown in figure 23.1-A.
7. Connect I_{LO} to "B" Lead as shown in figure 23.1-A.
8. Turn test current on.
9. Connect V_{HI} and V_{LO} to voltage taps as shown in resistance table.
10. To measure Total with leads, connect V_{HI} to "A" Lead and V_{LO} to "B" Lead.
11. At the IP End, jumper the 8Ka leads as shown in Figure 23.1-A.
12. Read resistance and record in traveler.

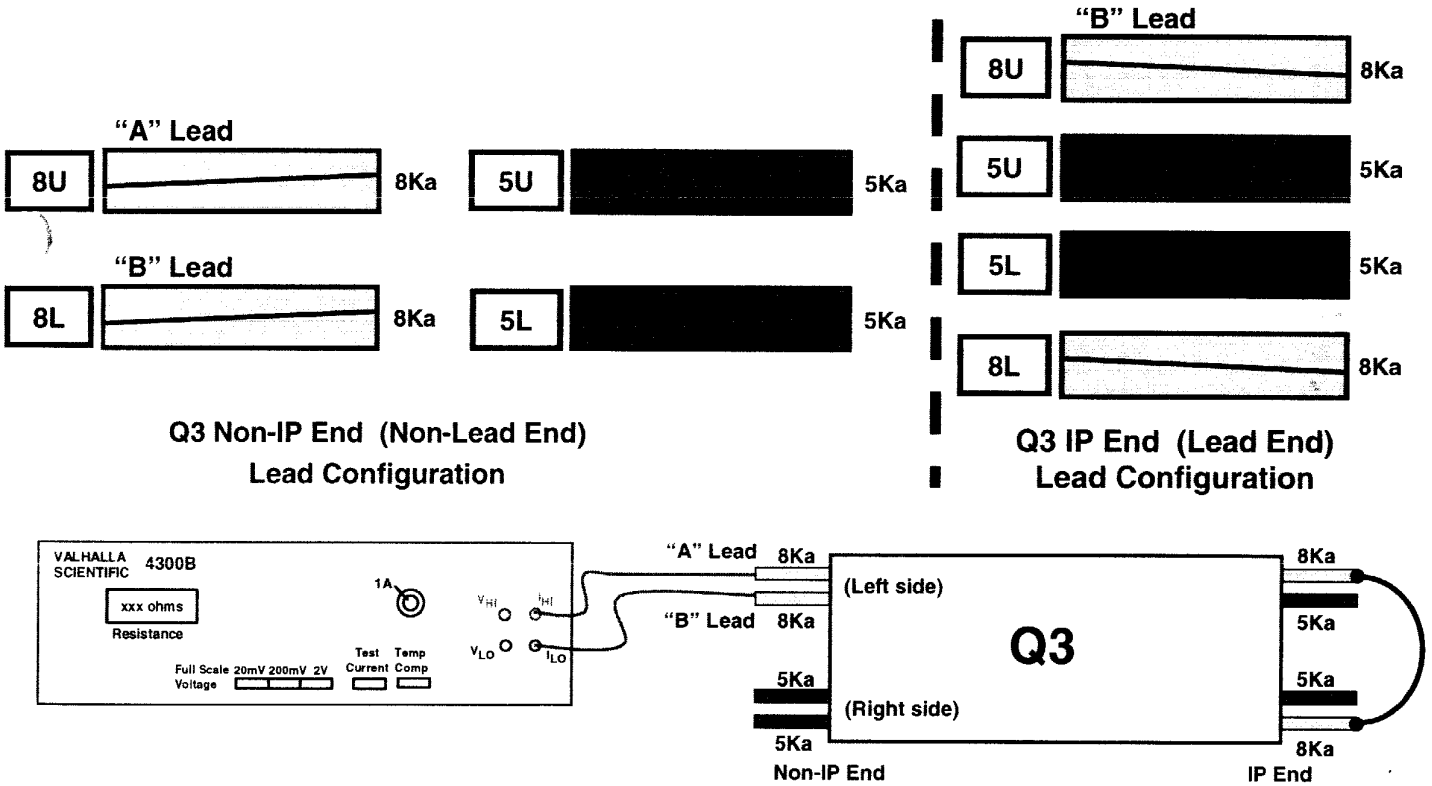

Figure 24.0-A

24.1 Measure the Resistance of the Q1 Cold Mass.

(Q3) Resistance				Nominal 3.35 to 3.45 Ω
Voltage Tap Serial Numbers				Total Resistance
Connect	Fermi	CERN	KEK	
V_{HI}	VTa1Q3	EE1113	a1	3.444 Ω
V_{LO}	VTc1Q3	EE1213	c1	
V_{HI}	VTc1Q3	EE1213	c1	3.445 Ω
V_{LO}	VTb1Q3	EE1313	b1	

				Total Resistance with Leads
				Nominal 6.75 to 6.85
V_{HI}	VTa1Q3	EE1113	a1	3445 Ω
V_{LO}	VTb1Q3	EE1313	b1	
V_{HI}	Q4 Power Lead			6.908 Ω
V_{LO}	Q3 Power Lead			

Technician(s) 4-14-06 Date

24.2 Measure the resistance of Redundant Voltage Taps.

Q3 Redundant Voltage Taps				Nominal 3.35 to 3.45 Ω
Connect	Fermi	CERN	KEK	Resistance
V_{HI}	VTa2Q3	EE1123	a2	3.446 Ω
V_{LO}	VTc2Q3	EE1223	c2	
V_{HI}	VTc2Q3	EE1223	c2	3.447 Ω
V_{LO}	VTb2Q3	EE1323	b2	

Technician(s) 4-14-06 Date

To measure Ls and Q of a Q3 Cold Mass:

1. Use Agilent 4263B LCR Meter.
2. Turn power on by pushing line button. Wait 30 seconds until display screen is lit.
3. Recall program #1. To do this, push recall (Rcl), then push #1, then push Enter.
4. Push Auto/Hold button to release hold.
5. Verify that the frequency displayed in the upper right corner of the display screen is 1000 Hz and the level recorded in the lower right corner of the display screen is 1V or 1000 mV.
6. Connect H_{cur} to "A" power lead as shown in figure 24.0-B.
7. Connect L_{cur} to "B" power lead as shown in figure 24.0-B.
8. Connect H_{pot} and L_{pot} buttons to voltage taps as shown below.
9. Read Ls and Q from display and record in table.

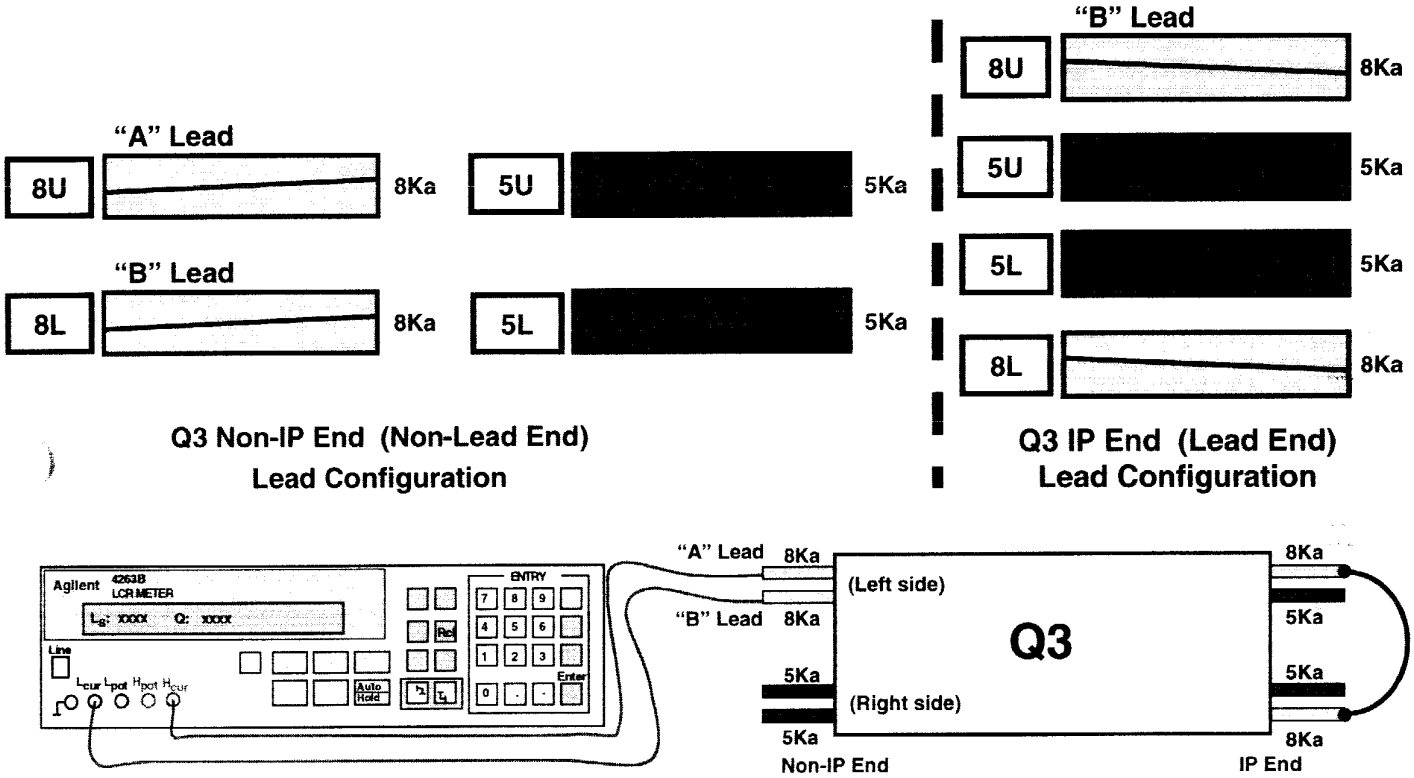

Figure 24.0-B

24.3 Measure the Inductance (Ls) of a Q1 Cold Mass.

(Q3) Inductance				Nominal 15 to 16 mH
Voltage Tap Serial Numbers				Total Inductance
Connect	Fermi	CERN	KEK	
H_{POT}	VTa1Q3	EE1113	a1	15.337 mH
L_{POT}	VTc1Q3	EE1213	c1	
H_{POT}	VTc1Q3	EE1213	c1	15319 mH
L_{POT}	VTb1Q3	EE1313	b1	

				Nominal 30 to 32 mH
				Total Inductance
H_{POT}	VTa1Q3	EE1113	a1	30.650 mH
L_{POT}	VTb1Q3	EE1313	b1	
H_{POT}	Q4 Power Lead			30.658 mH
L_{POT}	Q3 Power Lead			

Technician(s) 4-14-06 Date

24.4 Measure the Q-Factor (Q) of a Q1 Cold Mass.

(Q3) Q-Factor				Nominal 1.0 to 1.2
Voltage Tap Serial Numbers				Total Q
Connect	Fermi	CERN	KEK	
H_{POT}	VTa1Q3	EE1113	a1	1.1
L_{POT}	VTc1Q3	EE1213	c1	
H_{POT}	VTc1Q3	EE1213	c1	1.1
L_{POT}	VTb1Q3	EE1313	b1	

				Nominal 1.0 to 1.2
				Total Q
H_{POT}	VTa1Q3	EE1113	a1	1.1
L_{POT}	VTb1Q3	EE1313	b1	
H_{POT}	Q4 Power Lead			1.1
L_{POT}	Q3 Power Lead			

Technician(s) 4-14-06 Date

To measure the resistance of a Thermometer (RTD):

1. Use Hewlett Packard HP3457A digital multimeter.
2. Record temperature of building within +/- 5 degrees.
3. Press line button to turn line on.
4. Connect wires as shown in Figure below.
   U+ (Black) to Sense HI
   I+ (Yellow) to Input HI
   U- (Red) to Sense LO
   I- (Green) to Input LO
5. Push blue button (function key) once.
6. Push OHMF button.
7. Verify arrow in readout is above the 4WΩ (meaning a 4 wire resistance measurement).
8. Read resistance in ohms and record in traveler.

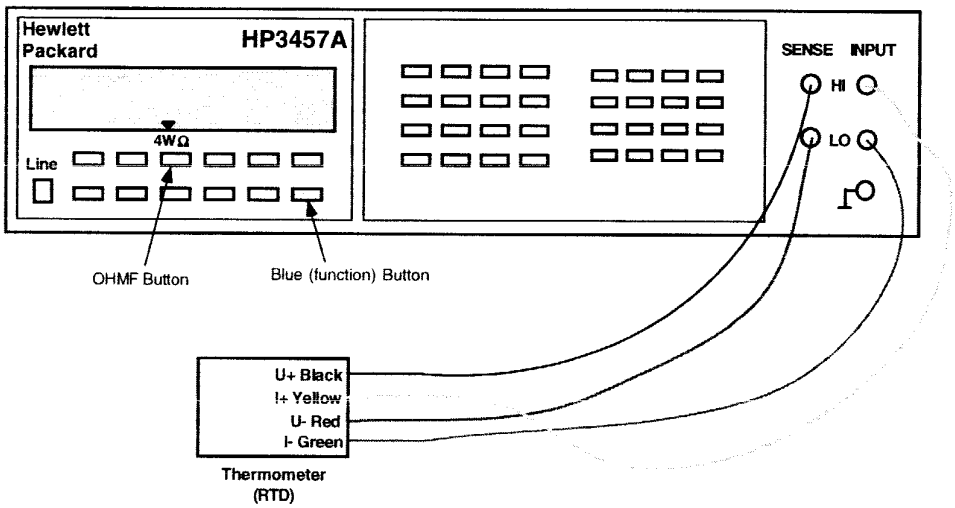

To measure the resistance of a Cryogenic (Warm-up) Heater

1. Use Hewlett Packard HP3457A digital multimeter.
2. Record temperature of building within +/- 5 degrees.
3. Press line button to turn line on.
4. Connect wires as shown in Figure below.
5. Push blue button (function key) once.
6. Push OHMF button.
7. Verify arrow in readout is above the 4WΩ (meaning a 4 wire resistance measurement).
   Note: Although this is technically a 4 wire measurement, it is effectively a 2 wire measurement, since there are only 2 wires connected to each heater.
8. Read resistance in ohms and record in traveler.

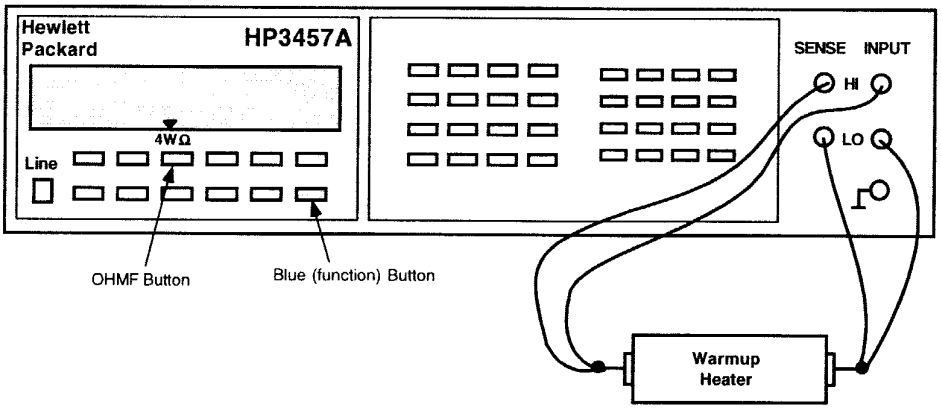

24.5 Measure the resistance of the RTD's and Cryogenic (Warm-up) Heaters. Record MFR Resistance (Expedition) for RTD's.

Q3 - RTD's and Cryogenic (warm-up) Heaters					
Temperature of Building (± 5°): _____					
Component	**Fermi**	**CERN**	**Range**	**Resistance**	**MFR Resistance (Expedition)**
Q3 RTD, primary	TaQ3	TT8313	**60 to 70Ω**	60.40 Ω	60.41 Ω
Q3 RTD, redundant	TbQ3	TT8323	**60 to 70Ω**	59.834 Ω	60.02 Ω
Q3 Cryogenic (warm-up) Heater (LE) - wire at top (CERN #1 I+)	W1aQ3	EH8313+	**16 to 18.5Ω**	16.55 Ω	
Q3 Cryogenic (warm-up) Heater (LE) - wire at bottom (CERN #1 I-)	W2aQ3	EH8313-			
Q3 Cryogenic (warm-up) Heater (Non-LE) - wire at top (CERN #2 I+)	W1bQ3	EH8323+	**16 to 18.5Ω**	16.18 Ω	
Q3 Cryogenic (warm-up) Heater (Non-LE) - wire at bottom (CERN #2 I-)	W2bQ3	EH8323-			

Technician(s) _____ Date 4-14-06

24.6 Using the Hewlett Packard HP3457A digital multimeter, measure the Protection (Strip) Heater Resistance for Q3.

Q3 Protection (Strip) Heater Resistance					
Fermi	**CERN**	**KEK**	**Description**	**Limit**	**Resistance**
H1aQ3	**YT1113+**	**HA1**	**Circuit A**	**28 to 32Ω**	28.86 Ω
H2aQ3	**YT1113-**	**HA2**			
H1bQ3	**YT1123+**	**HB1**	**Circuit B**	**28 to 32Ω**	28.88 Ω
H2bQ3	**YT1123-**	**HB2**			

Technician(s) _____ Date 4/14/06

24.7 Check Q1 & Q2 Instrumentation Bus Wires for Continuity.

Module	Pin	Fermi	CERN	KEK	Description	Done
M2	1	VTa1Q1	EE1111	a1	Q1 Lead Voltage Tap "a" , primary	✓
M2	2	VTa2Q1	EE1121	a2	Q1 Lead Voltage Tap "a", redundant	✓
M2	3	VTc1Q1	EE1211	c1	Q1 Center Voltage Tap "c", primary	✓
M2	4	VTc2Q1	EE1221	c2	Q1 Center Voltage Tap "c", redundant	✓
M2	5	VTb1Q1	EE1311	b1	Q1 Lead Voltage Tap "b", primary	✓
M3	1	VTc1Q2a	EE1212		Q2a Center Voltage Tap "c", primary	✓
M3	3	VTa2Q2a	EE1122		Q2a lead Voltage Tap "a", redundant	✓
M3	4	VTa1Q2a	EE1112		Q2a Lead Voltage Tap "a", primary	✓
M3	5	VTb2Q1	EE1321	b2	Q1 Lead Voltage Tap "b", redundant	✓
M4	1	VTc2Q2a	EE1222		Q2a Center Voltage Tap "c", redundant	✓
M4	3	VTb1Q2a	EE1312		Q2a Lead Voltage Tap "b", primary	✓
M4	4	VTb2Q2a	EE1322		Q2a Lead Voltage Tap "b", redundant	✓
M4	5	VTb1Q2b	EE1612		Q2b lead Voltage Tap "b", primary	✓
M5	2	VTc2Q2b	EE1522		Q2b Center Voltage Tap "c", redundant	✓
M5	3	VTc1Q2b	EE1512		Q2b Center Voltage Tap "c", primary	✓
M5	5	VTb2Q2b	EE1622		Q2b Lead Voltage Tap "b" redundant	✓
M6	1	VTa1Q2b	EE1412		Q2b Lead Voltage Tap "a", primary	✓
M6	2	VTa2Q2b	EE1422		Q2b Lead Voltage Tap "a", redundant	✓
M8	1	VTH1	EE8121		Corrector voltage tap Q1-H1 (skew dipole) (on MCBX, MCBXH, A+ lead)	✓
M8	2	VTV1	EE8111		Corrector voltage tap Q1-V1 (normal dipole) (on MCBX, MCBXV A+ lead)	✓
M8	3	VTH2	EE8122		Corrector voltage tap Q2-H2 (skew dipole) (on MCBX, MCBXH, A+ lead)	✓
M8	4	VTV2	EE8112		Corrector voltage tap Q2-V2 (normal dipole) (on MCBX, MCBXV, A+ lead)	✓
M10	1	W1aQ1	EH8311+		Q1 Cryogenic Heater lead end - wire at top (CERN #1 I+)	✓
M10	2	W2aQ1	EH8311-		Q1 Cryogenic Heater lead end - wire at bottom (CERN #1 I-)	✓
M10	3	W1bQ1	EH8321+		Q1 Cryogenic Heater non-lead end - wire at top (CERN #2 I+)	✓
M10	4	W2bQ1	EH8321-		Q1 Cryogenic Heater non-lead end - wire at bottom (CERN #2 I-)	✓
M11	1	W1aQ2A	EH8312+		Q2A Cryogenic Heater lead end - wire toward cold mass end plate (CERN #1 I+)	✓
M11	2	W2aQ2A	EH8312-		Q2A Cryogenic Heater lead end - wire toward cold mass mag center (CERN #1 I-)	✓
M11	3	W1bQ2A	EH8322+		Q2A Cryogenic Heater non-lead end- wire toward cold mass end plate (CERN #2 I+)	✓

Module	Pin	Fermi	CERN	KEK	Description	Done
M11	4	W2bQ2A	EH8322-		Q2A Cryogenic Heater non-lead end- wire toward cold mass mag center (CERN #2 I-)	✓
M12	1	W1aQ2B	EH8332+		Q2B Cryogenic Heater lead end - wire toward cold mass end plate (CERN #1 I+)	✓
M12	2	W2aQ2B	EH8332-		Q2B Cryogenic Heater lead end - wire toward cold mass mag center (CERN #1 I-)	✓
M12	3	W1bQ2B	EH8342+		Q2B Cryogenic Heater non-lead end- wire toward cold mass end plate (CERN #2 I+)	✓
M12	4	W2bQ2B	EH8342-		Q2B Cryogenic Heater non-lead end- wire toward cold mass mag center (CERN #2 I-)	✓
M14	1	H1aQ1	YT1111+	HA1	Q1 Protection (Strip) Heater, ("a" circuit) (CERN lead #1+)	✓
M14	3	H2aQ1	YT1111-	HA2	Q1Protection (Strip) Heater, ("a" circuit) (CERN lead #1-)	✓
M14	5	H1bQ1	YT1121+	HB1	Q1 Protection (Strip) Heater, ("b" circuit) (CERN lead #2+)	✓
M15	2	H1aQ2a	YT1112+		Q2a Protection (Strip) Heater, 1-4 & 2-3 circuit (FNAL lead A+) (CERN lead #1+)	✓
M15	4	H2bQ1	YT1121-	HB2	Q1 Protection (Strip) Heater, ("b" circuit) (CERN lead #2-)	✓
M16	1	H2aQ2a	YT1112-		Q2a Protection (Strip) Heater, 1-4 & 2-3 circuit (FNAL lead A-) (CERN lead #1-)	✓
M16	3	H1bQ2a	YT1122+		Q2a Protection (Strip) Heater, 1-2 & 3-4 circuit (FNAL lead B+) (CERN lead#2+)	✓
M16	5	H2bQ2a	YT1122-		Q2a Protection (Strip) Heater, 1-2 & 3-4 circuit (FNAL lead B-) (CERN lead #2-)	✓
M17	2	H2aQ2b	YT1132-		Q2b Protection (Strip) Heater, 1-4 & 2-3 circuit (FNAL lead A-) (CERN lead #1-)	✓
M17	4	H1aQ2b	YT1132+		Q2b Protection (Strip) Heater, 1-4 & 2-3 circuit (FNAL lead A+) (CERN lead #1+)	✓
M18	1	H1bQ2b	YT1142+		Q2b Protection (Strip) Heater, 1-2 & 3-4 circuit (FNAL lead B+) (CERN lead#2+)	✓
M18	3	H2bQ2b	YT1142-		Q2b Protection (Strip) Heater, 1-2 & 3-4 circuit (FNAL lead B-) (CERN lead #2-)	✓
M20	1	TaQ1_I+	TT8311 I+		Q1 RTD, primary Wire color: Yellow	✓
M20	2	TaQ1_I-	TT8311 I-		Q1 RTD, primary Wire color: Green	✓
M20	3	TaQ1_V+	TT8311 U+		Q1 RTD, primary Wire color: Black	✓
M20	4	TaQ1_V-	TT8311 U-		Q1 RTD, primary Wire color: Red	✓
M20	5	TbQ1_I+	TT8321 I+		Q1 RTD, redundant: Wire color: Yellow	✓
M20	6	TbQ1_I-	TT8321 I-		Q1 RTD, redundant: Wire color: Green	✓
M20	11	TbQ1_V+	TT8321 U+		Q1 RTD, redundant: Wire color: Black	✓
M20	10	TbQ1_V-	TT8321 U-		Q1 RTD, redundant: Wire color: Red	✓
M20	9	TaQ2a_I+	TT8312 I+		Q2a RTD, primary Wire color: Yellow	✓
M20	8	TaQ2a_I-	TT8312 I-		Q2a RTD, primary Wire color: Green	✓

Module	Pin	Fermi	CERN	KEK	Description	Done
M20	7	TaQ2a_V+	TT8312 U+		Q2a RTD, primary Wire color: Black	✓
M20	12	TaQ2a_V-	TT8312 U-		Q2a RTD, primary Wire color: Red	✓
M20	13	TbQ2a_I+	TT8322 I+		Q2a RTD, redundant: Wire color: Yellow	✓
M20	14	TbQ2a_I-	TT8322 I-		Q2a RTD, redundant: Wire color: Green	✓
M20	15	TbQ2a_V+	TT8322 U+		Q2a RTD, redundant: Wire color: Black	✓
M20	16	TbQ2a_V-	TT8322 U-		Q2a RTD, redundant: Wire color: Red	✓
M21	1	TaQ2b_I+	TT8332 I+		Q2b RTD, primary Wire color: Yellow	✓
M21	2	TaQ2b_I-	TT8332 I-		Q2b RTD, primary Wire color: Green	✓
M21	3	TaQ2b_V+	TT8332 U+		Q2b RTD, primary Wire color: Black	✓
M21	4	TaQ2b_V-	TT8332 U-		Q2b RTD, primary Wire color: Red	✓
M21	5	TbQ2b_I+	TT8342 I+		Q2b RTD, redundant: Wire color: Yellow	✓
M21	6	TbQ2b_I-	TT8342 I-		Q2b RTD, redundant: Wire color: Green	✓
M21	11	TbQ2b_V+	TT8342 U+		Q2b RTD, redundant: Wire color: Black	✓
M21	10	TbQ2b_V-	TT8342 U-		Q2b RTD, redundant: Wire color: Red	✓

Technician(s) — Date: 4-14-06

Responsible Authority/Physicist — Date: 14-APR-2006

24.8 Using the Valhalla 4300B, connect 10mA applied voltage thru the corrector Power Leads. Measure Resistance and record in the table below. Record Initial resistance of Corrector Element and record below.

Corrector Bus Leads

	V3A	V3B	H3A	H3B	B3A	B3B	B6A	B6B	
	V2A	V2B	H2A	H2B	B4A	B4B	A4A	A4B	
	V1A	V1B	H1A	H1B	A2A	A2B	A3A	A3B	

(View Looking from DFBX into Q3)

Corrector Element	Readout Labels		Power Labels		Resistance	Nominal Resistance
			I_{HI}	I_{LO}		
MQSX	A2A	EE8223	A2A	A2B	.062	.057 to .063Ω
	EE8223	A2B			7.60	7.22 to 7.98Ω
	A2A	A2B			7.62	7.20 to 7.96Ω
MCBXV	V3A	EE8113	V3A	V3B	.01	.010 to .025Ω
	EE8113	V3B			17.38	16.57 to 18.32Ω
	V3A	V3B			17.42	16.56 to 18.31Ω
MCBXH	H3A	EE8123	H3A	H3B	.01	.010 to .025Ω
	EE8123	H3B			21.2	20.35 to 22.50Ω
	H3A	H3B			21.4	20.35 to 22.50Ω
MCTX	B6A	EE8613	B6A	B6B	.02	.010 to .025Ω
	EE8613	B6B			98.7	93.45 to 103.29Ω
	B6A	B6B			98.6	93.33 to 103.15Ω
MCSX	B3A	EE8313	B3A	B3B	.02	.010 to .025Ω
	EE8313	B3B			27.8	26.47 to 29.26Ω
	B3A	B3B			27.7	26.45 to 29.23Ω
MCOSX	A4A	EE8423	A4A	A4B	.01	.009 to .011Ω
	EE8423	A4B			11.91	11.18 to 12.36Ω
	A4A	A4B			11.9	11.12 to 12.29Ω
MCOX	B4A	EE8413	B4A	B4B	.01	.010 to .025Ω
	EE8413	B4B			12.9	11.86 to 13.11Ω
	B4A	B4B			12.9	12.16 to 13.45Ω
MCSSX	A3A	EE8323	A3A	A3B	.02	.009 to .011Ω
	EE8323	A3B			13.3	11.59 to 13.81Ω
	A3A	A3B			13.4	12.66 to 14.00Ω

Technician(s) 4-14-06 Date

24.9 Hipot the Cable Busses according to tables below. Hipots are done @ 3kV. Hold for 30 seconds. Maximum Leakage is 3 μA.

Ramp Rate	Hi Potential (3000 V)	Grounded	Leakage
10 V/sec	8L	Everything else	.118 μA
10 V/sec	5L	Everything else	.174 μA
10 V/sec	5U	Everything else	.103 μA
3 V/sec. Coil - Ground Coil - Strip Htrs	8U	Everything else	.407 μA
3 V/sec. Strip Htrs - Ground Strip Htrs - Coil	Strip Heaters	Everything else	.295 μA

Technician(s)

4-12-06
Date

24.10 Hipot according to tables below.

Final Q3 Corrector and Bus Hipots

Looking into Non-IP End of Q3

Looking from DFBX to Q3

Gray – 500V Others – 0V ### Others – 0V

MCBXA		V3A	V3B	H3A	H3B	B3A	B3B	B6A	B6B	
Q2		V2A	V2B	H2A	H2B	B4A	B4B	A4A	A4B	
Q1		V1A	V1B	H1A	H1B	A2A	A2B	A3A	A3B	
						MQSX		MCSOX		

MCBXA
MCSOX

This shows the corrector bus in its final configuration as it enters the DFBX

Need to verify that there is no continuity between any of these paths

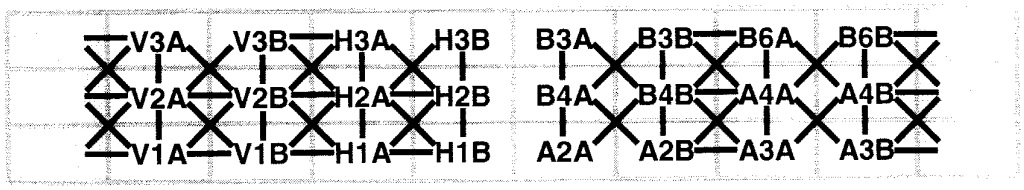

Measurement

Hipot #1
Gray – 500V
Others – 0V

	V3A	V3B	H3A	H3B	B3A	B3B	B6A	B6B
	V2A	V2B	H2A	H2B	B4A	B4B	A4A	A4B
	V1A	V1B	H1A	H1B	A2A	A2B	A3A	A3B

.226 µA

Hipot #2
Gray – 500V
Others – 0V

	V3A	V3B	H3A	H3B	B3A	B3B	B6A	B6B
	V2A	V2B	H2A	H2B	B4A	B4B	A4A	A4B
	V1A	V1B	H1A	H1B	A2A	A2B	A3A	A3B

.168 µA

Hipot #3
Gray – 500V
Others – 0V

	V3A	V3B	H3A	H3B	B3A	B3B	B6A	B6B
	V2A	V2B	H2A	H2B	B4A	B4B	A4A	A4B
	V1A	V1B	H1A	H1B	A2A	A2B	A3A	A3B

.275 µA

Hipot #4
Gray – 500V
Others – 0V

	V3A	V3B	H3A	H3B	B3A	B3B	B6A	B6B
	V2A	V2B	H2A	H2B	B4A	B4B	A4A	A4B
	V1A	V1B	H1A	H1B	A2A	A2B	A3A	A3B

.068 µA

Final Q3 Corrector and Bus Hipots

Looking into Non-IP End of Q3

Looking from DFBX to Q3

Measurement

Hipot #5
Gray – 500V
Others – 0V

V3A	V3B	H3A	H3B	B3A	B3B	B6A	B6B
V2A	V2B	H2A	H2B	B4A	B4B	A4A	A4B
V1A	V1B	H1A	H1B	A2A	A2B	A3A	A3B

.118 µA

Hipot #6
Gray – 500V
Others – 0V

V3A	V3B	H3A	H3B	B3A	B3B	B6A	B6B
V2A	V2B	H2A	H2B	B4A	B4B	A4A	A4B
V1A	V1B	H1A	H1B	A2A	A2B	A3A	A3B

.126 µA

Hipot #7
Gray – 500V
Others – 0V

V3A	V3B	H3A	H3B	B3A	B3B	B6A	B6B
V2A	V2B	H2A	H2B	B4A	B4B	A4A	A4B
V1A	V1B	H1A	H1B	A2A	A2B	A3A	A3B

.121 µA

Technician(s)

4-12-06
Date

24.11 Perform a stretched wire measurement of the system to align the Beam Tube Flange within ± .5 mm.

Responsible Authority/Physicist _____ Date _____

24.12 Align Beam Tube and the Flange at IP End per Q3 Cold Mass Welded Assembly (ME-390529).

Technician(s) _____ Date _____

N/A

24.13 Weld the Flange to the IP End Dome as per Q3 Cold Mass Welded Assembly (ME-390529).

Weldor(s) _____ Date _____

24.14 Align Beam Tube and Flange at NON-IP End per Q3 Cold Mass Welded Assembly (ME-390529).

Technician(s) _____ Date _____

24.15 Weld the Flange to the Non-IP End Dome as per Q3 Cold Mass Welded Assembly (ME-390529).

Weldor(s) _____ Date _____

24.11 Perform a stretched wire measurement of the system to align the Beam Tube Flange within ± .5 mm.

STOP

Responsible Authority/Physicist — Date: 4/21/06

24.12 Align Beam Tube and the Flange at IP End per Q3 Cold Mass Welded Assembly (ME-390529).

Technician(s) — Date: 4-19-06

24.13 Weld the Flange to the IP End Dome as per Q3 Cold Mass Welded Assembly (ME-390529).

Weldor(s) — Date: 4-19-06 WR

24.14 Align Beam Tube and Flange at NON-IP End per Q3 Cold Mass Welded Assembly (ME-390529).

Technician(s) — Date: 4-19-06

24.15 Weld the Flange to the Non-IP End Dome as per Q3 Cold Mass Welded Assembly (ME-390529).

Weldor(s) — Date: 4-19-06 WR

25.0 Installation of Hypertronics

25.1 Assemble/Install Hypertronics Connectors, **without Cover** at **Non-IP End** as per Q3 Module Assembly (ME-369900). Pin Numbers for connectors are shown in Table 25.1 below.

Table 25.1

Module	Pin	Fermilab Label	CERN Label	KEK Label	Description
M1	1				Blank Module
M1	2				
M1	3				
M1	4				
M1	5				
M2	1	VTa1Q1	EE1111	a1	Q1 Lead Voltage Tap "a" , primary
M2	2	VTa2Q1	EE1121	a2	Q1 Lead Voltage Tap "a", redundant
M2	3	VTc1Q1	EE1211	c1	Q1 Center Voltage Tap "c", primary
M2	4	VTc2Q1	EE1221	c2	Q1 Center Voltage Tap "c", redundant
M2	5	VTb1Q1	EE1311	b1	Q1 Lead Voltage Tap "b", primary
M3	1	VTc2Q2a	EE1222		Q2a Center Voltage Tap "c" , redundant
M3	2	VTc1Q2a	EE1212		Q2a Center Voltage Tap "c" , primary
M3	3	VTa2Q2a	EE1122		Q2a Lead Voltage Tap "a", redundant
M3	4	VTa1Q2a	EE1112		Q2a Lead Voltage Tap "a", primary
M3	5	VTb2Q1	EE1321	b2	Q1 Lead Voltage Tap "b",redundant
M4	1	VTb1Q2a	EE1312		Q2a Lead Voltage Tap "b", primary
M4	2	VTb2Q2a	EE1322		Q2a Lead Voltage Tap "b", redundant
M4	3	VTb1Q2b	EE1612		Q2b Lead Voltage Tap "b", primary
M4	4	VTb2Q2b	EE1622		Q2b Lead Voltage Tap "b", redundant
M4	5	VTc1Q2b	EE1512		Q2b Center Voltage Tap "c" , primary
M5	1	VTa2Q3	EE1123	a2	Q3 Lead Voltage Tap "a", redundant
M5	2	VTa1Q3	EE1113	a1	Q3 Lead Voltage Tap "a", primary
M5	3	VTa2Q2b	EE1422		Q2b Lead Voltage Tap "a", redundant
M5	4	VTa1Q2b	EE1412		Q2b Lead Voltage Tap "a", primary
M5	5	VTc2Q2b	EE1522		Q2b Center Voltage Tap "c" , redundant
M6	1	VTc1Q3	EE1213	c1	Q3 Center Voltage Tap "c" , primary
M6	2	VTc2Q3	EE1223	c2	Q3 Center Voltage Tap "c" , redundant
M6	3	VTb1Q3	EE1313	b1	Q3 Lead Voltage Tap "b" , primary
M6	4	VTb2Q3	EE1323	b2	Q3 Lead Voltage Tap "b" , redundant
M6	5	Empty	Empty		No connection
M7	1				Blank Module
M7	2				
M7	3				
M7	4				
M7	5				

Table 25.1 (continued)

Module	Pin	Fermilab Label	CERN Label	KEK Label	Description
M8	1	VTH1	EE8121		Corrector voltage tap Q1-H1 (skew dipole) (on MCBX, MCBXH, A+ lead)
M8	2	VTV1	EE8111		Corrector voltage tap Q1-V1 (normal dipole) (on MCBX, MCBXV A+ lead)
M8	3	VTH2	EE8122		Corrector voltage tap Q2-H2 (skew dipole) (on MCBX, MCBXH, A+ lead)
M8	4	VTV2	EE8112		Corrector voltage tap Q2-V2 (normal dipole) (on MCBX, MCBXV, A+ lead)
M8	5	Empty	Empty		No connection
M9	1	VTH3	EE8123		Corrector voltage tap Q3-H3 (skew dipole) (on
M9	2	VTV3	EE8113		Corrector voltage tap Q3-V3 (normal dipole) (on
M9	3	VTA2	EE8223		Corrector voltage tap Q3-A2 (skew quadrupole) (on
M9	4	VTA3	EE8323		Corrector voltage tap Q3-A3 (skew sextupole) (on
M9	5	Empty	Empty		No Connection
M10	1	VTB3	EE8313		Corrector voltage tap Q3-B3 (normal sextupole)(on
M10	2	VTA4	EE8423		Corrector voltage tap Q3-A4 (skew octupole) (on
M10	3	VTB4	EE8413		Corrector voltage tap Q3-B4 (normal octupole) (on
M10	4	VTB6	EE8613		Corrector voltage tap Q3-B6 (normal dodecapole)
M10	5	Empty	Empty		No Connection
M11	1				Blank Module
M11	2				
M11	3				
M11	4				
M11	5				
M12	1	W1aQ1	EH8311+		Q1 Cryogenic Heater lead end - wire at top (CERN
M12	2	W2aQ1	EH8311-		Q1 Cryogenic Heater lead end - wire at bottom
M12	3	W1bQ1	EH8321+		Q1 Cryogenic Heater non-lead end - wire at top
M12	4	W2bQ1	EH8321-		Q1 Cryogenic Heater non-lead end - wire at bottom
M12	5	Empty	Empty		No Connection

Table 25.1 (continued)

Module	Pin	Fermilab Label	CERN Label	KEK Label	Description
M13	1	W1aQ2A	EH8312+		Q2A Cryogenic Heater lead end - wire toward cold mass end plate (CERN #1 I+)
M13	2	W2aQ2A	EH8312-		Q2A Cryogenic Heater lead end - wire toward cold mass mag center (CERN #1 I-)
M13	3	W1bQ2A	EH8322+		Q2A Cryogenic Heater non-lead end- wire toward cold mass end plate (CERN #2 I+)
M13	4	W2bQ2A	EH8322-		Q2A Cryogenic Heater non-lead end- wire toward cold mass mag center (CERN #2 I-)
M13	5	Empty	Empty		No connection
M14	1	W1aQ2B	EH8332+		Q2B Cryogenic Heater lead end - wire toward cold mass end plate (CERN #1 I+)
M14	2	W2aQ2B	EH8332-		Q2B Cryogenic Heater lead end - wire toward cold mass mag center (CERN #1 I-)
M14	3	W1bQ2B	EH8342+		Q2B Cryogenic Heater non-lead end- wire toward cold mass end plate (CERN #2 I+)
M14	4	W2bQ2B	EH8342-		Q2B Cryogenic Heater non-lead end- wire toward cold mass mag center (CERN #2 I-)
M14	5	Empty	Empty		No connection
M15	1	W1aQ3	EH8313+		Q3 Cryogenic Heater lead end - wire at top (CERN #1 I+)
M15	2	W2aQ3	EH8313-		Q3 Cryogenic Heater lead end - wire at bottom (CERN #1 I-)
M15	3	W1bQ3	EH8323+		Q3 Cryogenic Heater non-lead end - wire at top (CERN #2 I+)
M15	4	W2bQ3	EH8323-		Q3 Cryogenic Heater non-lead end - wire at bottom (CERN #2 I-)
M15	5	Empty	Empty		No Connection
M16	1				Blank Module
M16	2				
M16	3				
M16	4				
M16	5				
M17	1	H1aQ1	YT1111+	HA1	Q1 Protection (Strip) Heater, ("a" circuit) (CERN lead #1+)
M17	2	Empty	Empty		No connection
M17	3	H2aQ1	YT1111-	HA2	Q1 Protection (Strip) Heater, ("a" circuit) (CERN lead #1-)
M17	4	Empty	Empty		No connection
M17	5	H1bQ1	YT1121+	HB1	Q1 Protection (Strip) Heater, ("b" circuit) (CERN lead #2+)
M18	1	Empty	Empty		No connection
M18	2	H1aQ2a	YT1112+		Q2a Protection (Strip) Heater, 1-4 & 2-3 circuit (FNAL lead A+)
M18	3	Empty	Empty		No connection
M18	4	H2bQ1	YT1121-	HB2	Q1 Protection (Strip) Heater, ("b" circuit) (CERN lead #2-)
M18	5	Empty	Empty		No connection

Table 25.1 (continued)

Module	Pin	Fermilab Label	CERN Label	KEK Label	Description
M19	1	H2aQ2a	YT1112-		Q2a Protection (Strip) Heater, 1-4 & 2-3 circuit (FNAL lead A-) (CERN lead #1-)
M19	2	Empty	Empty		No connection
M19	3	H1bQ2a	YT1122+		Q2a Protection (Strip) Heater, 1-2 & 3-4 circuit (FNAL lead B+) (CERN lead#2+)
M19	4	Empty	Empty		No connection
M19	5	H2bQ2a	YT1122-		Q2a Protection (Strip) Heater, 1-2 & 3-4 circuit (FNAL lead B-) (CERN lead #2-)
M20	1	Empty	Empty		No connection
M20	2	H2aQ2b	YT1132-		Q2b Protection (Strip) Heater, 1-4 & 2-3 circuit (FNAL lead A-) (CERN lead #1-)
M20	3	Empty	Empty		No connection
M20	4	H1aQ2b	YT1132+		Q2b Protection (Strip) Heater, 1-4 & 2-3 circuit (FNAL lead A+) (CERN lead #1+)
M20	5	Empty	Empty		No connection
M21	1	H1bQ2b	YT1142+		Q2b Protection (Strip) Heater, 1-2 & 3-4 circuit (FNAL lead B+) (CERN lead#2+)
M21	2	Empty	Empty		No connection
M21	3	H2bQ2b	YT1142-		Q2b Protection (Strip) Heater, 1-2 & 3-4 circuit (FNAL lead B-) (CERN lead #2-)
M21	4	Empty	Empty		No Connection
M21	5	H1aQ3	YT1113+	HA1	Q3 Protection (Strip) Heater, ("a" circuit) (CERN lead #1+)
M22	1	Empty	Empty		No Connection
M22	2	H1bQ3	YT1123+	HB1	Q3 Protection (Strip) Heater, ("b" circuit) (CERN lead #2+)
M22	3	Empty	Empty		No Connection
M22	4	H2aQ3	YT1113-	HA2	Q3 Protection (Strip) Heater, ("a" circuit) (CERN lead #1-)
M22	5	Empty	Empty		No Connection
M23	1	H2bQ3	YT1123-	HB2	Q3 Protection (Strip) Heater, ("b" circuit) (CERN lead #2-)
M23	2	Empty	Empty		No Connection
M23	3	Empty	Empty		No Connection
M23	4	Empty	Empty		No Connection
M23	5	Empty	Empty		No Connection

Table 25.1 (continued)

Module	Pin	Fermilab Label	CERN Label	KEK Label	Description
M24	1				Blank Module
M24	2				
M24	3				
M24	4				
M24	5				
Note: Pin Numbers of Module M25 are not listed in numerical order.					
M25	1	TaQ1_I+	TT8311 I+		Q1 RTD, primary Wire color: Yellow
M25	2	TaQ1_I-	TT8311 I-		Q1 RTD, primary Wire color: Green
M25	3	TaQ1_V+	TT8311 U+		Q1 RTD, primary Wire color: Black
M25	4	TaQ1_V-	TT8311 U-		Q1 RTD, primary Wire color: Red
M25	5	TbQ1_I+	TT8321 I+		Q1 RTD, redundant: Wire color: Yellow
M25	6	TbQ1_I-	TT8321 I-		Q1 RTD, redundant: Wire color: Green
M25	11	TbQ1_V+	TT8321 U+		Q1 RTD, redundant: Wire color: Black
M25	10	TbQ1_V-	TT8321 U-		Q1 RTD, redundant: Wire color: Red
M25	9	TaQ2a_I+	TT8312 I+		Q2a RTD, primary Wire color: Yellow
M25	8	TaQ2a_I-	TT8312 I-		Q2a RTD, primary Wire color: Green
M25	7	TaQ2a_V+	TT8312 U+		Q2a RTD, primary Wire color: Black
M25	12	TaQ2a_V-	TT8312 U-		Q2a RTD, primary Wire color: Red
M25	13	TbQ2a_I+	TT8322 I+		Q2a RTD, redundant: Wire color: Yellow
M25	14	TbQ2a_I-	TT8322 I-		Q2a RTD, redundant: Wire color: Green
M25	15	TbQ2a_V+	TT8322 U+		Q2a RTD, redundant: Wire color: Black
M25	16	TbQ2a_V-	TT8322 U-		Q2a RTD, redundant: Wire color: Red
M25	17	Empty	Empty		No connection
Note: Pin Numbers of Module M26 are not listed in numerical order.					
M26	1	TaQ2b_I+	TT8332 I+		Q2b RTD, primary Wire color: Yellow
M26	2	TaQ2b_I-	TT8332 I-		Q2b RTD, primary Wire color: Green
M26	3	TaQ2b_V+	TT8332 U+		Q2b RTD, primary Wire color: Black
M26	4	TaQ2b_V-	TT8332 U-		Q2b RTD, primary Wire color: Red
M26	5	TbQ2b_I+	TT8342 I+		Q2b RTD, redundant: Wire color: Yellow
M26	6	TbQ2b_I-	TT8342 I-		Q2b RTD, redundant: Wire color: Green
M26	11	TbQ2b_V+	TT8342 U+		Q2b RTD, redundant: Wire color: Black
M26	10	TbQ2b_V-	TT8342 U-		Q2b RTD, redundant: Wire color: Red
M26	9	TaQ3_I+	TT8313 I+		Q3 RTD, primary Wire color: Yellow
M26	8	TaQ3_I-	TT8313 I-		Q3 RTD, primary Wire color: Green
M26	7	TaQ3_V+	TT8313 U+		Q3 RTD, primary Wire color: Black
M26	12	TaQ3_V-	TT8313 U-		Q3 RTD, primary Wire color: Red
M26	13	TbQ3_I+	TT8323 I+		Q3 RTD, redundant: Wire color: Yellow
M26	14	TbQ3_I-	TT8323 I-		Q3 RTD, redundant: Wire color: Green
M26	15	TbQ3_V+	TT8323 U+		Q3 RTD, redundant: Wire color: Black
M26	16	TbQ3_V-	TT8323 U-		Q3 RTD, redundant: Wire color: Red
M26	17	Empty	Empty		No connection

Hypertronics Connector Pin Locations (Q3 non-IP end)
VIEW: Male (pin) solder cup side

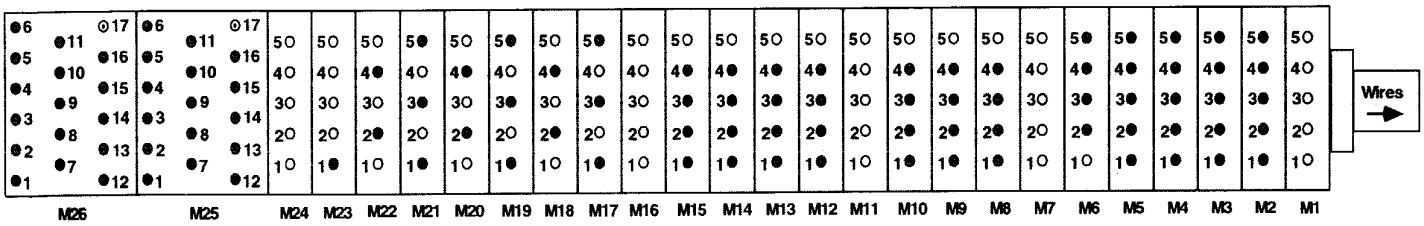

- ● Hole filled in grey: Wire soldered to pin.
- ⊙ Hole with dot in center: Pin exists but no wire soldered to it.
- ○ Hole filled in white: No pin. Hole is drilled out.

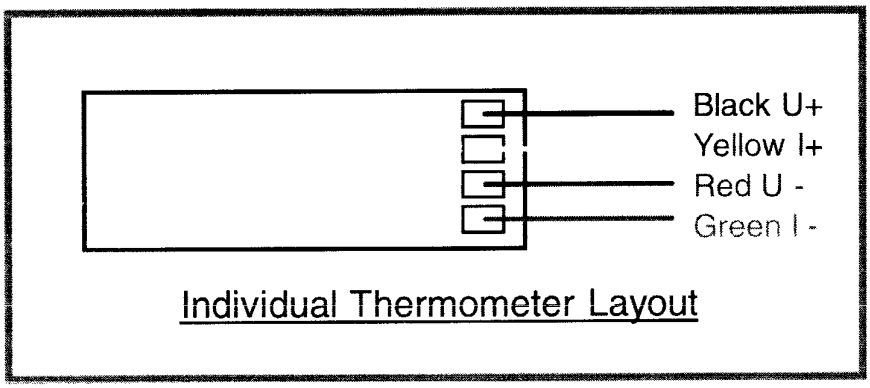

Note(s):

Ensure the Hypertronics cover has NOT been installed.

D. Eddy
Technician(s)

04/25/2006
Date

25.2 Assemble/Install Hypertronics Connectors, **without Cover** at **IP End** as per Q3 Module Assembly (ME-369900). Pin Numbers for connectors are shown in Table 25.2 below.

Table 25.2

Module	Pin	Fermilab Label	CERN Label	KEK Label	Description
M1	1				Blank Module
M1	2				
M1	3				
M1	4				
M1	5				
M2	1	VTa1Q1	EE1111	a1	Q1 Lead Voltage Tap "a" , primary
M2	2	VTa2Q1	EE1121	a2	Q1 Lead Voltage Tap "a", redundant
M2	3	VTc1Q1	EE1211	c1	Q1 Center Voltage Tap "c", primary
M2	4	VTc2Q1	EE1221	c2	Q1 Center Voltage Tap "c", redundant
M2	5	VTb1Q1	EE1311	b1	Q1 Lead Voltage Tap "b", primary
M3	1	VTc1Q2a	EE1212		Q2a Center Voltage Tap "c", primary
M3	2	Empty	Empty		No connection
M3	3	VTa2Q2a	EE1122		Q2a lead Voltage Tap "a", redundant
M3	4	VTa1Q2a	EE1112		Q2a Lead Voltage Tap "a", primary
M3	5	VTb2Q1	EE1321	b2	Q1 Lead Voltage Tap "b", redundant
M4	1	VTc2Q2a	EE1222		Q2a Center Voltage Tap "c", redundant
M4	2	Empty	Empty		No connection
M4	3	VTb1Q2a	EE1312		Q2a Lead Voltage Tap "b", primary
M4	4	VTb2Q2a	EE1322		Q2a Lead Voltage Tap "b", redundant
M4	5	VTb1Q2b	EE1612		Q2b lead Voltage Tap "b", primary
M5	1	Empty	Empty		No connection
M5	2	VTc2Q2b	EE1522		Q2b Center Voltage Tap "c", redundant
M5	3	VTc1Q2b	EE1512		Q2b Center Voltage Tap "c", primary
M5	4	Empty	Empty		No connection
M5	5	VTb2Q2b	EE1622		Q2b Lead Voltage Tap "b" redundant
M6	1	VTa1Q2b	EE1412		Q2b Lead Voltage Tap "a", primary
M6	2	VTa2Q2b	EE1422		Q2b Lead Voltage Tap "a", redundant
M6	3	Empty	Empty		No connection
M6	4	Empty	Empty		No connection
M6	5	Empty	Empty		No connection
M7	1				Blank Module
M7	2				
M7	3				
M7	4				
M7	5				

Table 25.2 (continued)

Module	Pin	Fermilab Label	CERN Label	KEK Label	Description
M8	1	VTH1	EE8121		Corrector voltage tap Q1-H1 (skew dipole) (on MCBX, MCBXH, A+ lead)
M8	2	VTV1	EE8111		Corrector voltage tap Q1-V1 (normal dipole) (on MCBX, MCBXV A+ lead)
M8	3	VTH2	EE8122		Corrector voltage tap Q2-H2 (skew dipole) (on MCBX, MCBXH, A+ lead)
M8	4	VTV2	EE8112		Corrector voltage tap Q2-V2 (normal dipole) (on MCBX, MCBXV, A+ lead)
M8	5	Empty	Empty		No connection
M9	1				Blank Module
M9	2				
M9	3				
M9	4				
M9	5				
M10	1	W1aQ1	EH8311+		Q1 Cryogenic Heater lead end - wire at top (CERN #1 I+)
M10	2	W2aQ1	EH8311-		Q1 Cryogenic Heater lead end - wire at bottom (CERN #1 I-)
M10	3	W1bQ1	EH8321+		Q1 Cryogenic Heater non-lead end - wire at top (CERN #2 I+)
M10	4	W2bQ1	EH8321-		Q1 Cryogenic Heater non-lead end - wire at bottom (CERN #2 I-)
M10	5	Empty	Empty		No connection
M11	1	W1aQ2A	EH8312+		Q2A Cryogenic Heater lead end - wire toward cold mass end plate (CERN #1 I+)
M11	2	W2aQ2A	EH8312-		Q2A Cryogenic Heater lead end - wire toward cold mass mag center (CERN #1 I-)
M11	3	W1bQ2A	EH8322+		Q2A Cryogenic Heater non-lead end- wire toward cold mass end plate (CERN #2 I+)
M11	4	W2bQ2A	EH8322-		Q2A Cryogenic Heater non-lead end- wire toward cold mass mag center (CERN #2 I-)
M11	5	Empty	Empty		No connection
M12	1	W1aQ2B	EH8332+		Q2B Cryogenic Heater lead end - wire toward cold mass end plate (CERN #1 I+)
M12	2	W2aQ2B	EH8332-		Q2B Cryogenic Heater lead end - wire toward cold mass mag center (CERN #1 I-)
M12	3	W1bQ2B	EH8342+		Q2B Cryogenic Heater non-lead end- wire toward cold mass end plate (CERN #2 I+)
M12	4	W2bQ2B	EH8342-		Q2B Cryogenic Heater non-lead end- wire toward cold mass mag center (CERN #2 I-)
M12	5	Empty	Empty		No connection

Table 25.2 (continued)

Module	Pin	Fermilab Label	CERN Label	KEK Label	Description
M13	1				Blank Module
M13	2				
M13	3				
M13	4				
M13	5				
M14	1	H1aQ1	YT1111+	HA1	Q1 Protection (Strip) Heater, ("a" circuit) (CERN lead
M14	2	Empty	Empty		No connection
M14	3	H2aQ1	YT1111-	HA2	Q1Protection (Strip) Heater, ("a" circuit) (CERN lead #1-
M14	4	Empty	Empty		No connection
M14	5	H1bQ1	YT1121+	HB1	Q1 Protection (Strip) Heater, ("b" circuit) (CERN lead
M15	1	Empty	Empty		No connection
M15	2	H1aQ2a	YT1112+		Q2a Protection (Strip) Heater, 1-4 & 2-3 circuit (FNAL lead A+) (CERN lead #1+)
M15	3	Empty	Empty		No connection
M15	4	H2bQ1	YT1121-	HB2	Q1 Protection (Strip) Heater, ("b" circuit) (CERN lead
M15	5	Empty	Empty		No connection
M16	1	H2aQ2a	YT1112-		Q2a Protection (Strip) Heater, 1-4 & 2-3 circuit (FNAL lead A-) (CERN lead #1-)
M16	2	Empty	Empty		No connection
M16	3	H1bQ2a	YT1122+		Q2a Protection (Strip) Heater, 1-2 & 3-4 circuit (FNAL lead B+) (CERN lead#2+)
M16	4	Empty	Empty		No connection
M16	5	H2bQ2a	YT1122-		Q2a Protection (Strip) Heater, 1-2 & 3-4 circuit (FNAL lead B-) (CERN lead #2-)
M17	1	Empty	Empty		No connection
M17	2	H2aQ2b	YT1132-		Q2b Protection (Strip) Heater, 1-4 & 2-3 circuit (FNAL lead A-) (CERN lead #1-)
M17	3	Empty	Empty		No connection
M17	4	H1aQ2b	YT1132+		Q2b Protection (Strip) Heater, 1-4 & 2-3 circuit (FNAL lead A+) (CERN lead #1+)
M17	5	Empty	Empty		No connection
M18	1	H1bQ2b	YT1142+		Q2b Protection (Strip) Heater, 1-2 & 3-4 circuit (FNAL lead B+) (CERN lead#2+)
M18	2	Empty	Empty		No connection
M18	3	H2bQ2b	YT1142-		Q2b Protection (Strip) Heater, 1-2 & 3-4 circuit (FNAL lead B-) (CERN lead #2-)
M18	4	Empty	Empty		No connection
M18	5	Empty	Empty		No connection
M19	1				Blank Module
M19	2				
M19	3				
M19	4				
M19	5				

Table 25.2 (continued)

Module	Pin	Fermilab Label	CERN Label	KEK Label	Description
NOTE: PIN NUMBERS OF MODULE M20 ARE NOT LISTED IN NUMERICAL ORDER.					
M20	1	TaQ1_I+	TT8311 I+		Q1 RTD, primary Wire color: Yellow
M20	2	TaQ1_I-	TT8311 I-		Q1 RTD, primary Wire color: Green
M20	3	TaQ1_V+	TT8311 U+		Q1 RTD, primary Wire color: Black
M20	4	TaQ1_V-	TT8311 U-		Q1 RTD, primary Wire color: Red
M20	5	TbQ1_I+	TT8321 I+		Q1 RTD, redundant: Wire color: Yellow
M20	6	TbQ1_I-	TT8321 I-		Q1 RTD, redundant: Wire color: Green
M20	11	TbQ1_V+	TT8321 U+		Q1 RTD, redundant: Wire color: Black
M20	10	TbQ1_V-	TT8321 U-		Q1 RTD, redundant: Wire color: Red
M20	9	TaQ2a_I+	TT8312 I+		Q2a RTD, primary Wire color: Yellow
M20	8	TaQ2a_I-	TT8312 I-		Q2a RTD, primary Wire color: Green
M20	7	TaQ2a_V+	TT8312 U+		Q2a RTD, primary Wire color: Black
M20	12	TaQ2a_V-	TT8312 U-		Q2a RTD, primary Wire color: Red
M20	13	TbQ2a_I+	TT8322 I+		Q2a RTD, redundant: Wire color: Yellow
M20	14	TbQ2a_I-	TT8322 I-		Q2a RTD, redundant: Wire color: Green
M20	15	TbQ2a_V+	TT8322 U+		Q2a RTD, redundant: Wire color: Black
M20	16	TbQ2a_V-	TT8322 U-		Q2a RTD, redundant: Wire color: Red
M20	17	Empty	Empty		No connection
NOTE: PIN NUMBERS OF MODULE M21 ARE NOT LISTED IN NUMERICAL ORDER.					
M21	1	TaQ2b_I+	TT8332 I+		Q2b RTD, primary Wire color: Yellow
M21	2	TaQ2b_I-	TT8332 I-		Q2b RTD, primary Wire color: Green
M21	3	TaQ2b_V+	TT8332 U+		Q2b RTD, primary Wire color: Black
M21	4	TaQ2b_V-	TT8332 U-		Q2b RTD, primary Wire color: Red
M21	5	TbQ2b_I+	TT8342 I+		Q2b RTD, redundant: Wire color: Yellow
M21	6	TbQ2b_I-	TT8342 I-		Q2b RTD, redundant: Wire color: Green
M21	11	TbQ2b_V+	TT8342 U+		Q2b RTD, redundant: Wire color: Black
M21	10	TbQ2b_V-	TT8342 U-		Q2b RTD, redundant: Wire color: Red
M21	9	Empty	Empty		No connection
M21	8	Empty	Empty		No connection
M21	7	Empty	Empty		No connection
M21	12	Empty	Empty		No connection
M21	13	Empty	Empty		No connection
M21	14	Empty	Empty		No connection
M21	15	Empty	Empty		No connection
M21	16	Empty	Empty		No connection
M21	17	Empty	Empty		No connection

Hypertronics Connector Pin Locations Q3 Lead (IP) End
VIEW: Female (receptacle) solder cup side

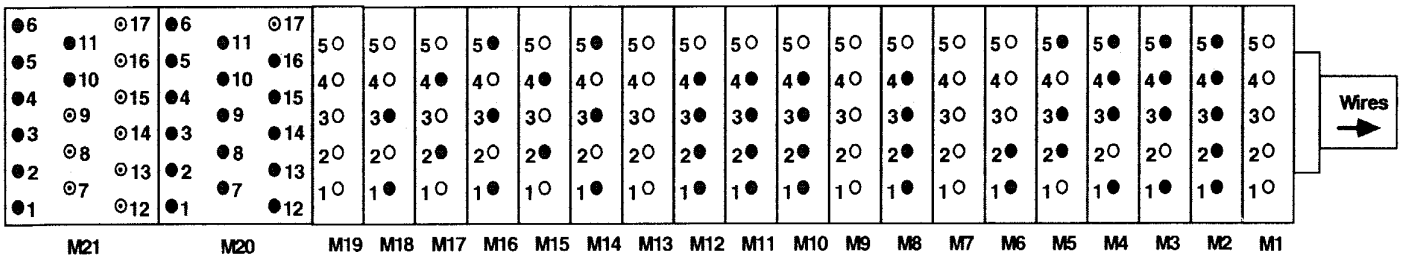

- ● Hole filled in grey: Wire soldered to pin.
- ⊙ Hole with dot in center: Pin exists but no wire soldered to it.
- O Hole filled in white: No pin. Hole is drilled out.

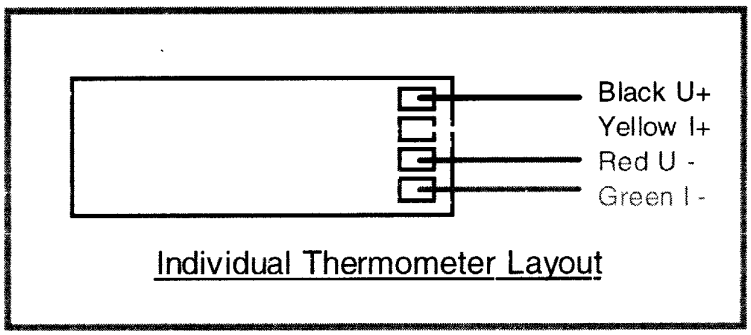

Note(s):

Ensure the Hypertronics cover has NOT been installed.

Steve Helis
Technician(s)

04/25/06
Date

25.3 **(This step is to be performed by MTF Technicians)** Perform electrical inspections of the Hypertronics connectors:

#1 - Test of Q3 Fixed Voltage Taps

Apply 1A current between BUS #1 & BUS #2 on the Feed End (See Figure 25.3-A)

1. Clamp Bus #1 to Bus #2 on Return End.
2. Connect Current Source: BUS #1 to Positive and BUS #2 to Negative.

Use a 3457 or equivalent Digital Voltmeter and record measurement to four decimal places.

Use the Two-Wires Voltage Measurement Technique:

1. Connect Digital Voltmeter LO wire to BUS#2 (or Negative output of Power source).
2. HI wire of Digital Voltmeter will move through wires to measure V.

DO NOT USE DC CURRENT LARGER THAN 2A.

DO NOT APPLY CURRENT THROUGH MAGNET LONGER THAN 30MIN.

BUS #1
BUS #2
BUS #3
BUS #4

Power Bus Location Return End

BUS #1	BUS #2
BUS #3	BUS #4

Power Bus Location Feed End

Figure 25.3-A

HYPERTRONICS CONNECTOR		FNAL Labels	Description	Wire Labels	Expected Voltage,V	Measured
Module	Pin					
M5	2	VTa1Q3	Q3 Lead Voltage Tap "a", primary	EE1113	7.0000	7.007 V
M5	1	VTa2Q3	Q3 Lead Voltage Tap "a", redundant	EE1123	7.0000	7.007 V
M6	3	VTb1Q3	Q3 lead Voltage Tap "b", primary	EE1313	0.0030	11.351 mV
M6	4	VTb2Q3	Q3 Lead Voltage Tap "b" redundant	EE1323	0.0030	11.323 mV
M6	1	VTc1Q3	Q3 Center Voltage Tap "c", primary	EE1213	3.5000	3.508 V
M6	2	VTc2Q3	Q3 Center Voltage Tap "c", redundant	EE1223	3.5000	3.508 V
					Across BUS #1 and BUS #2:	7.011 V

D. Eddy
Technician(s)

04/25/2006
Date

#2 – Cryostat Heater Checkout

Measure resistance across each heater using a handheld meter.
Measure resistance from heater to ground using a handheld meter.

Module	Pin		Expected Resistance, OHM	Measured Resistance, OHM	FNAL Label	Description
M15	1	EH8313+	17	17.83 Ω	W1aQ3	Q3 Cryogenic Heater lead end - wire toward cold mass end plate (CERN #1 I+)
M15	2	EH8313-			W2aQ3	Q3 Cryogenic Heater lead end - wire toward cold mass mag center (CERN #1 I-)
M15	3	EH8323+	17	17.46 Ω	W1bQ3	Q3 Cryogenic Heater non-lead end- wire toward cold mass end plate (CERN #2 I+)
M15	4	EH8323-			W2bQ3	Q3 Cryogenic Heater non-lead end- wire toward cold mass mag center (CERN #2 I-)
M15	1	EH8313+	more than 20M Ω	∞	W1aQ3	Q3 Cryogenic Heater lead end - wire toward cold mass end plate (CERN #1 I+)
		GROUND				
M15	3	EH8323+	more than 20M Ω	∞	W1bQ3	Q3 Cryogenic Heater non-lead end- wire toward cold mass end plate (CERN #2 I+)
		GROUND				

D. Eddy
Technician(s)

04/25/2006
Date

#3 – Test of Q3 Protection Strip Heaters

Measure resistance across each heater using a handheld meter.
Measure resistance from heater to ground using handheld meter.
Measure resistance from heater to coil using handheld meter.

Module	Pin	Breakout BOX Labels	Expected Resistance, OHM	Measured Resistance, OHM	FNAL Label	Description
M22	4	YT1113-	30	30.07 Ω	H2aQ1	Q1 Protection (Strip) Heater, 1-4 & 2-3 circuit (FNAL lead A-) (CERN lead #1-)
M21	5	YT1113+			H1aQ1	Q1 Protection (Strip) Heater, 1-4 & 2-3 circuit (FNAL lead A+) (CERN lead #1+)
M22	2	YT1123+	30	30.15 Ω	H1bQ3	Q3 Protection (Strip) Heater, 1-2 & 3-4 circuit (FNAL lead B+) (CERN lead#2+)
M23	1	YT1123-			H2bQ3	Q3 Protection (Strip) Heater, 1-2 & 3-4 circuit (FNAL lead B-) (CERN lead #2-)
M22	4	YT1113-	more than 20M Ω	∞	H2aQ3	Q3 Protection (Strip) Heater, 1-4 & 2-3 circuit (FNAL lead A-) (CERN lead #1-)
		GROUND				
M22	2	YT1123+	more than 20M Ω	∞	H1bQ3	Q3 Protection (Strip) Heater, 1-2 & 3-4 circuit (FNAL lead B+) (CERN lead#2+)
		GROUND				
M22	4	YT1113-	more than 20M Ω	∞	H2aQ3	Q3 Protection (Strip) Heater, 1-4 & 2-3 circuit (FNAL lead A-) (CERN lead #1-)
		COIL				
M22	2	YT1123+	more than 20M Ω	∞	H1bQ3	Q3 Protection (Strip) Heater, 1-2 & 3-4 circuit (FNAL lead B+) (CERN lead#2+)
		COIL				

D. Eddy
Technician(s)

04/25/2006
Date

#4 – Test of Q3 RTD's

Measure resistance across each RTD using a four wire meter.
Measure resistance from RTD to ground using handheld meter.
Measure resistance from RTD to the coil using handheld meter.

Module	Pin	Breakout BOX Labels	Expected Resistance, OHM	Measured Resistance, OHM	FNAL Label	Description
M26	9	TT8313 I+	57	60.19 Ω	TaQ3_I+	Q3 RTD, primary Wire color: Yellow
M26	8	TT8313 I-			TaQ3_I-	Q3 RTD, primary Wire color: Green
M26	7	TT8313 U+			TaQ3_V+	Q3 RTD, primary Wire color: Black
M26	12	TT8313 U-			TaQ3_V-	Q3 RTD, primary Wire color: Red
M26	13	TT8323 I+	57	59.88 Ω	TbQ3_I+	Q3 RTD, redundant: Wire color: Yellow
M26	14	TT8323 I-			TbQ3_I-	Q3 RTD, redundant: Wire color: Green
M26	15	TT8323 U+			TbQ3_V+	Q3 RTD, redundant: Wire color: Black
M26	16	TT8323 U-			TbQ3_V-	Q3 RTD, redundant: Wire color: Red
M26	9	TT8313 I+	more than 20M Ω	∞	TaQ3_I+	Q3 RTD, primary Wire color: Yellow
		GROUND				
M26	9	TT8323 I+	more than 20M Ω	∞	TbQ3_I+	Q3 RTD, redundant: Wire color: Yellow
		GROUND				
M26	9	TT8313 I+	more than 20M Ω	∞	TaQ3_I+	Q3 RTD, primary Wire color: Yellow
		COIL				
M26	9	TT8323 I+	more than 20M Ω	∞	TbQ3_I+	Q3 RTD, redundant: Wire color: Yellow
		COIL				

D. Eddy
Technician(s)

04/25/2006
Date

#5 – Test of Q3 Correction Coils

Correction Coil Bus Number →	3	4	1	2	7	8	5	6	
	V3A	V3B	H3A	H3B	B3A	B3B	B6A	B6B	
	V2A	V2B	H2A	H2B	B4A	B4B	A4A	A4B	
	V1A	V1B	H1A	H1B	A2A	A2B	A3A	A3B	

Measure resistance across both Correction Coil buses.

Measure resistance from Correction Coil to ground.

Measure resistance between taps.

Measure resistance from each tap to Correction Coil bus.

Measure continuity of Q1 Correction Coil bus.

Measure for short between Q1 Correction Coil bus and Ground.

Measure continuity of Q2 Correction Coil bus.

Measure for short between Q2 Correction Coil bus and Ground.

Horizontal Corrector Coil		Expected	Measured
H3-A	CCOIL BUS #1	23 Ω	22.11Ω
H3-B	CCOIL BUS #2		
Vertical Corrector Coil		**Expected**	**Measured**
V3-A	CCOIL BUS #3	19 Ω	18.17Ω
V3-B	CCOIL BUS #4		
A2 Corrector Coil		**Expected**	**Measured**
A2-A	CCOIL BUS #7	10 Ω	8.36 Ω
A2-B	CCOIL BUS #8		
H3-A	CCOIL BUS #1	> 20K Ω	∞
	GROUND		
V3-A	CCOIL BUS #3	> 20K Ω	∞
	GROUND		
A2-A	CCOIL BUS #7	> 20K Ω	∞
	GROUND		
A3 Corrector Coil resistance		**Expected**	**Measured**
A3-A	CCOIL BUS #5	14 Ω	14.30Ω
A3-B	CCOIL BUS #6		
B3 Corrector Coil resistance		**Expected**	**Measured**
B3-A	CCOIL BUS #7	28 Ω	28.79Ω
B3-B	CCOIL BUS #8		

A4 Corrector Coil resistance		Expected	Measured
A4-A	CCOIL BUS #5	12 Ω	12.70 Ω
A4-B	CCOIL BUS #6		
A3-A	CCOIL BUS #1	> 20K Ω	∞
	GND		
B3-A	CCOIL BUS #3	> 20K Ω	∞
	GND		
A4-A	CCOIL BUS #7	> 20K Ω	∞
	GND		
B4 Corrector Coil resistance		**Expected**	**Measured**
B4-A	CCOIL BUS #7	13 Ω	13.73
B4-B	CCOIL BUS #8		
B6 Corrector Coil resistance		**Expected**	**Measured**
B6-A	CCOIL BUS #5	100 Ω	100.34 Ω
B6-B	CCOIL BUS #6		
B4-A	CCOIL BUS #1	>20K Ω	∞
	GND		
B6-A	CCOIL BUS #3	>20K Ω	∞
	GND		

	Expected	Measured
EE8123 EE8113	> 20M Ω	∞
EE8123 EE8223	> 20M Ω	∞
EE8123 EE8323	> 20M Ω	∞
EE8123 EE8313	> 20M Ω	∞
EE8123 EE8423	> 20M Ω	∞
EE8123 EE8413	> 20M Ω	∞

	Expected	Measured
EE8123 EE8413	> 20M Ω	∞
EE8123 EE8613	> 20M Ω	∞
EE8113 EE8223	> 20M Ω	∞
EE8113 EE8323	> 20M Ω	∞
EE8113 EE8323	> 20M Ω	∞
EE8113 EE8313	> 20M Ω	∞

	Expected	Measured
EE8113 EE8423	> 20M Ω	∞
EE8113 EE8413	> 20M Ω	∞
EE8113 EE8613	> 20M Ω	∞
EE8223 EE8323	> 20M Ω	∞
EE8223 EE8313	> 20M Ω	∞

	Expected	Measured
EE8223 EE8613	> 20M Ω	∞
EE8323 EE8313	> 20M Ω	∞
EE8323 EE8423	> 20M Ω	∞
EE8323 EE8413	> 20M Ω	∞
EE8323 EE8613	> 20M Ω	∞

	Expected	Measured
EE8223 EE8423	>20M Ω	∞
EE8223 EE8413	>20M Ω	∞
EE8313 EE8613	>20M Ω	∞
EE8423 EE8413	>20M Ω	∞

	Expected	Measured
EE8313 EE8423	>20M Ω	∞
EE8313 EE8413	>20M Ω	∞
EE8423 EE8613	>20M Ω	∞
EE8413 EE8613	>20M Ω	∞

Measure voltage tap to each Correction Coil

	Expected	Measured
H3A EE8123	<5 Ω	1.32 Ω
V3A EE8113	<5 Ω	1.28 Ω
B6A EE8613	<5 Ω	1.30 Ω
B3A EE8313	<5 Ω	1.28 Ω
A4A EE8423	<5 Ω	1.27 Ω
B4A EE8413	<5 Ω	1.29 Ω
A3A EE8323	<5 Ω	1.30 Ω
A2A EE8223	<5 Ω	2.11 Ω

	Expected	Measured
H3B EE8123	24 Ω	22.86 Ω
V3B EE8113	19 Ω	18.86 Ω
B6B EE8613	100 Ω	100.97 Ω
B3B EE8313	29 Ω	29.37 Ω
A4B EE8423	12 Ω	13.30 Ω
B4B EE8413	13 Ω	14.35 Ω
A3B EE8323	13 Ω	14.88 Ω
A2B EE8223	10 Ω	9.80 Ω

Measure continuity of Q1 Correction Coil through bus. (Yes or No)

Correction Coil	Bus	Continuity?
V1A	3	YES
V1B	4	YES
H1A	1	YES
H1B	2	YES

Measure Correction Coil through bus of Q1 to Ground. (Yes or No)

Correction Coil	Bus	Continuity?
V1A	3	D.E. ~~YES~~ No
V1B	4	D.E ~~YES~~ No
H1A	1	D.E ~~YES~~ No
H1B	2	D.E. ~~YES~~ No

Measure continuity of Q2 Correction Coil through bus. (Yes or No)

Correction Coil	Bus	Continuity?
V2A	3	YES
V2B	4	YES
H2A	1	YES
H2B	2	YES

Measure Correction Coil through bus of Q2 to Ground. (Yes or No)

Correction Coil	Bus	Continuity?
V2A	3	No
V2B	4	No
H2A	1	No
H2B	2	No

D. Eddy
Technician(s)

04/25/2006
Date

#6 – Test of Q3 Feed Through

Measure resistance between all 24 - Q1 feed through signals.

Q1		
	EXPECTED Ω	OK?
EE1111	< 1 Ω	✓
EE1121	< 1 Ω	✓
EE1211	< 1 Ω	✓
EE1221	< 1 Ω	✓
EE1311	< 1 Ω	✓
EE1321	< 1 Ω	✓
EE8121	< 1 Ω	✓
EE8111	< 1 Ω	✓
EH8311+	< 1 Ω	✓
EH8311-	< 1 Ω	✓
EH8321+	< 1 Ω	✓
EH8321-	< 1 Ω	✓
YT1111+	< 1 Ω	✓
YT1111-	< 1 Ω	✓
YT1121+	< 1 Ω	✓
YT1121-	< 1 Ω	✓
TT8311I+	< 1 Ω	✓
TT8311I-	< 1 Ω	✓
TT8311U+	< 1 Ω	✓
TT8311U-	< 1 Ω	✓
TT8321I+	< 1 Ω	✓
TT8321I-	< 1 Ω	✓
TT8321U+	< 1 Ω	✓
TT8321U-	< 1 Ω	✓

Measure resistance between all 46 - Q2 feed through signals.

Q2		
	EXPECTED Ω	OK?
EE1112	< 1 Ω	✓
EE1122	< 1 Ω	✓
EE1212	< 1 Ω	✓
EE1222	< 1 Ω	✓
EE1312	< 1 Ω	✓
EE1322	< 1 Ω	✓
EE8122	< 1 Ω	✓
EE8112	< 1 Ω	✓
EH8312+	< 1 Ω	✓
EH8312-	< 1 Ω	✓
EH8322+	< 1 Ω	✓
EH8322-	< 1 Ω	✓
YT1112+	< 1 Ω	✓
YT1112-	< 1 Ω	✓
YT1122+	< 1 Ω	✓
YT1122-	< 1 Ω	✓
TT8312I+	< 1 Ω	✓
TT8312I-	< 1 Ω	✓
TT8312U+	< 1 Ω	✓
TT8312U-	< 1 Ω	✓
TT8322I+	< 1 Ω	✓
TT8322I-	< 1 Ω	✓
TT8322U+	< 1 Ω	✓

Q2		
	EXPECTED Ω	OK?
TT8322U-	< 1 Ω	✓
EE1412	< 1 Ω	✓
EE1422	< 1 Ω	✓
EE1512	< 1 Ω	✓
EE1522	< 1 Ω	✓
EE1612	< 1 Ω	✓
EE1622	< 1 Ω	✓
EH8332+	< 1 Ω	✓
EH8332-	< 1 Ω	✓
EH8342+	< 1 Ω	✓
EH8342-	< 1 Ω	✓
YT1132+	< 1 Ω	✓
YT1132-	< 1 Ω	✓
YT1142+	< 1 Ω	✓
YT1142-	< 1 Ω	✓
TT8332I+	< 1 Ω	✓
TT8332I-	< 1 Ω	✓
TT8332U+	< 1 Ω	✓
TT8332U-	< 1 Ω	✓
TT8342I+	< 1 Ω	✓
TT8342I-	< 1 Ω	✓
TT8342U+	< 1 Ω	✓
TT8342U-	< 1 Ω	✓

D. Eddy
Technician(s)

04/25/2006
Date

STOP

25.4 Inspect Hypertronics Connector. Ensure that it is free of flux and that Kapton has been installed properly.

Andy Hood
Responsible Authority/Physicist

25-APR-2006
Date

25.5 After LHC Project Physicist / designee has signed the above step, complete the installation of the Hypertronics.

D. Eddy
Technician(s)

04/26/2006
Date

26.0 Final Electrical Inspection

Perform an electrical inspection on each of the Individual Quadrants and the Cold Mass. Refer to the Valhalla and Leader Free Standing Coil Measurement Procedure (ES-292306).

To measure the Resistance of a Q3 Cold Mass:

1. Use Valhalla Scientific 4300B digital micro-ohmmeter.
2. Set Test Current to 0.1 amp.
3. Set Scale to 2V full scale.
4. Turn temperature compensation on.
5. Turn test current off.
6. Connect I_{HI} to "A" Lead as shown in figure 26.0-A.
7. Connect I_{LO} to "B" Lead as shown in figure 26.0-A.
8. Turn test current on.
9. Connect V_{HI} and V_{LO} to voltage taps as shown in resistance table.
10. To measure Total with leads, connect V_{HI} to "A" Lead and V_{LO} to "B" Lead.
11. At the IP End, jumper the 8Ka leads as shown in Figure 26.0-A.
12. Read resistance and record in traveler.

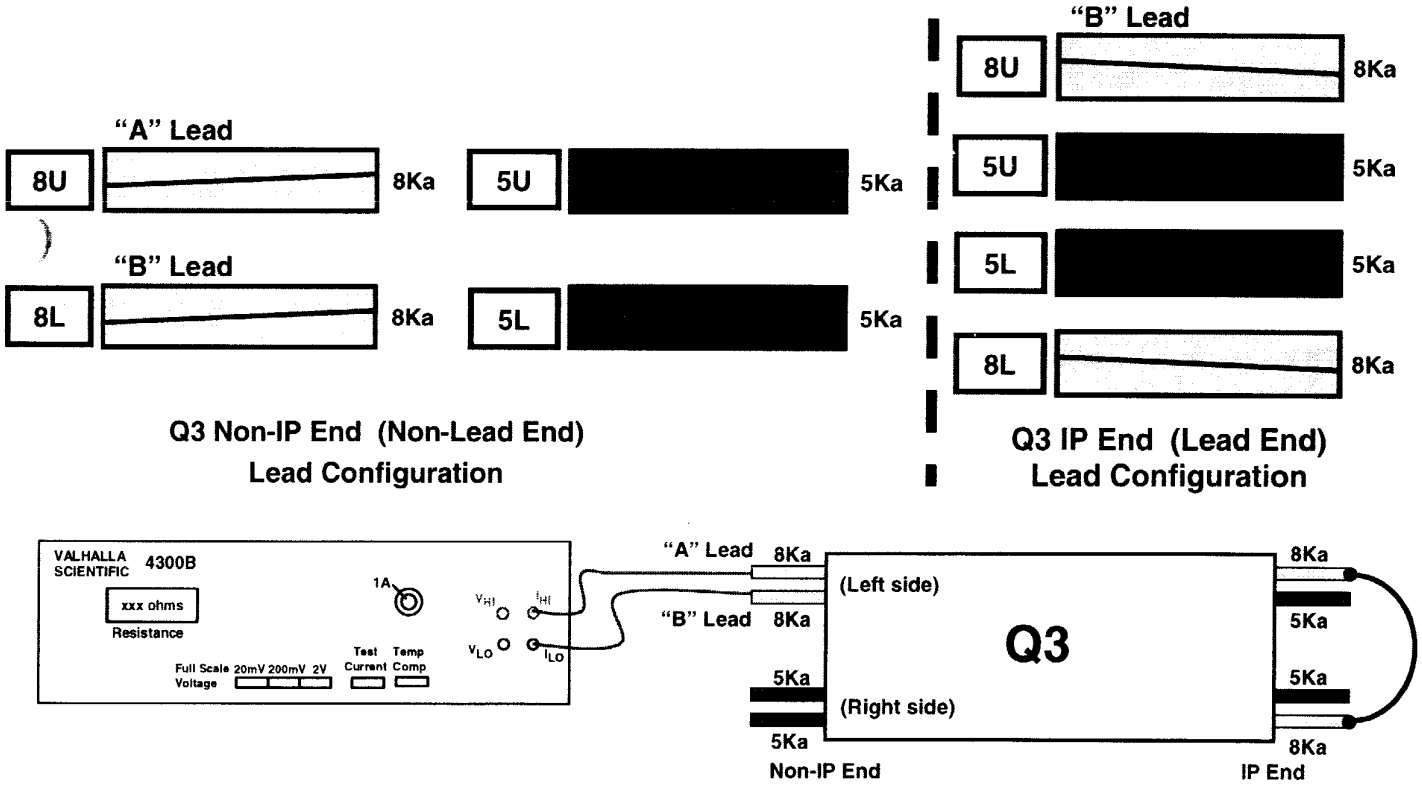

Figure 26.0-A

26.1 Measure the Resistance of the Q1 Cold Mass.

(Q3) Resistance				Nominal 3.35 to 3.45 Ω
Voltage Tap Serial Numbers				Total Resistance
Connect	Fermi	CERN	KEK	
V_{HI}	VTa1Q3	EE1113	a1	3.42 Ω
V_{LO}	VTc1Q3	EE1213	c1	
V_{HI}	VTc1Q3	EE1213	c1	3.24 Ω
V_{LO}	VTb1Q3	EE1313	b1	

				Total Resistance with Leads
				Nominal 6.75 to 6.85 Ω
V_{HI}	VTa1Q3	EE1113	a1	6.843 Ω
V_{LO}	VTb1Q3	EE1313	b1	
V_{HI}	Q4 Power Lead			6.880 Ω
V_{LO}	Q3 Power Lead			

Technician(s) 4-26-06 Date

26.2 Measure the resistance of Redundant Voltage Taps.

Q3 Redundant Voltage Taps				Nominal 3.35 to 3.45 Ω
Connect	Fermi	CERN	KEK	Resistance
V_{HI}	VTa2Q3	EE1123	a2	3.422 Ω
V_{LO}	VTc2Q3	EE1223	c2	
V_{HI}	VTc2Q3	EE1223	c2	3.422 Ω
V_{LO}	VTb2Q3	EE1323	b2	

Technician(s) 4-26-06 Date

To measure Ls and Q of a Q3 Cold Mass:

1. Use Agilent 4263B LCR Meter.
2. Turn power on by pushing line button. Wait 30 seconds until display screen is lit.
3. Recall program #1. To do this, push recall (Rcl), then push #1, then push Enter.
4. Push Auto/Hold button to release hold.
5. Verify that the frequency displayed in the upper right corner of the display screen is 1000 Hz and the level recorded in the lower right corner of the display screen is 1V or 1000 mV.
6. Connect H_{cur} to "A" power lead as shown in figure 26.0-B
7. Connect L_{cur} to "B" power lead as shown in figure 26.0-B.
8. Connect H_{pot} and L_{pot} buttons to voltage taps as shown below.
9. Read Ls and Q from display and record in table.

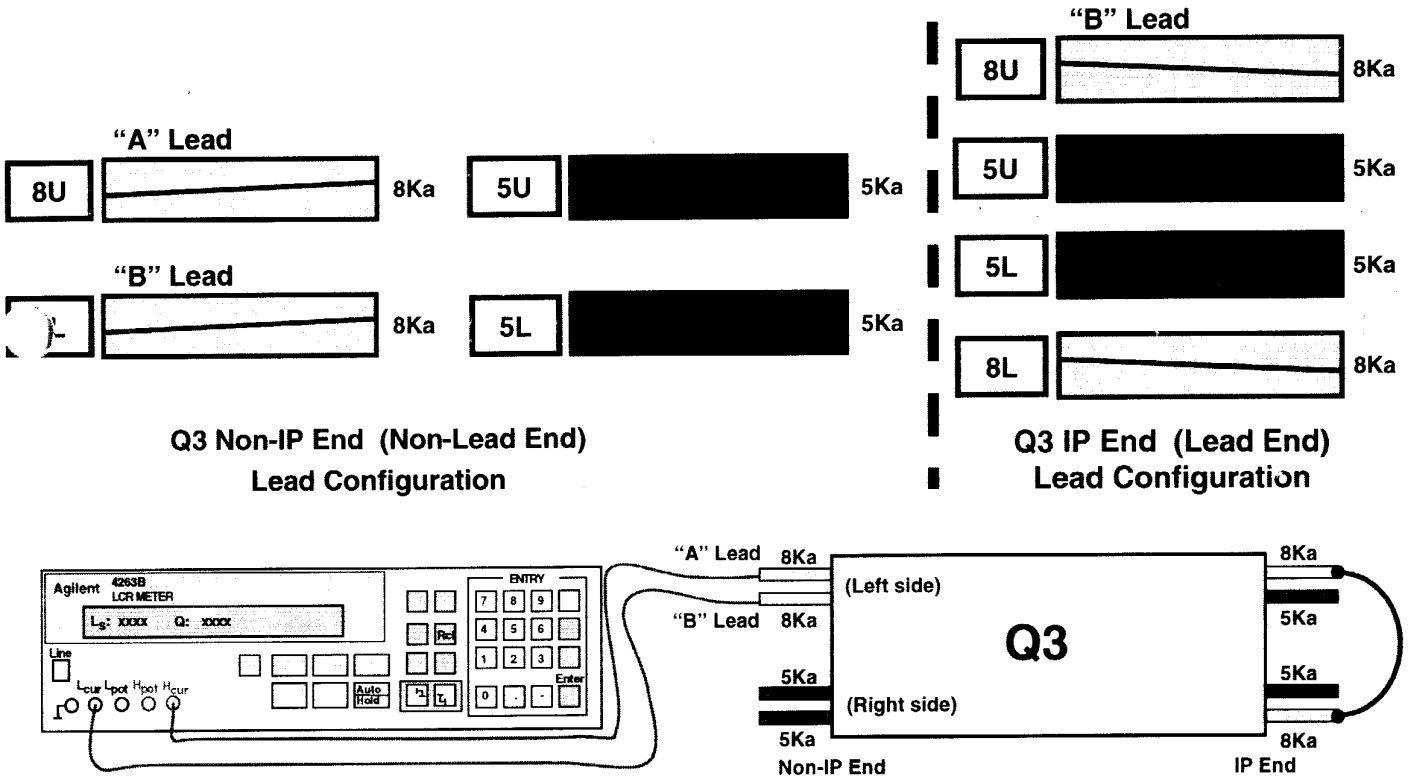

Figure 26.0-B

26.3 Measure the Inductance (Ls) of a Q1 Cold Mass.

(Q3) Inductance				Nominal 15 to 16 mH
Voltage Tap Serial Numbers				Total Inductance
Connect	Fermi	CERN	KEK	
H_{POT}	VTa1Q3	EE1113	a1	15.329 mH
L_{POT}	VTc1Q3	EE1213	c1	
H_{POT}	VTc1Q3	EE1213	c1	15.317 mH
L_{POT}	VTb1Q3	EE1313	b1	

				Nominal 30 to 32 mH
				Total Inductance
H_{POT}	VTa1Q3	EE1113	a1	30.640 mH
L_{POT}	VTb1Q3	EE1313	b1	
H_{POT}	Q4 Power Lead			30.643 mH
L_{POT}	Q3 Power Lead			

Technician(s) 4-26-06 Date

26.4 Measure the Q-Factor (Q) of a Q1 Cold Mass.

(Q3) Q-Factor				Nominal 1.0 to 1.2
Voltage Tap Serial Numbers				Total Q
Connect	Fermi	CERN	KEK	
H_{POT}	VTa1Q3	EE1113	a1	1.1
L_{POT}	VTc1Q3	EE1213	c1	
H_{POT}	VTc1Q3	EE1213	c1	1.1
L_{POT}	VTb1Q3	EE1313	b1	

				Nominal 1.0 to 1.2
				Total Q
H_{POT}	VTa1Q3	EE1113	a1	1.1
L_{POT}	VTb1Q3	EE1313	b1	
H_{POT}	Q4 Power Lead			1.1
L_{POT}	Q3 Power Lead			

Technician(s) 4-26-06 Date

26.5 Hipot according to table below. Hipot to 3kV. Maximum leakage is 3μA.

STOP

Have Crew Chief verify setup and sign below before continuing.

Crew Chief _____ Date 4/26/06

Hipot Heaters to Coil and Ground.

High Potential	Grounded	Floating	Leakage
All Strip Heaters	Coils, Yoke, Q3 Instrumentation Bus, Lead and Corrector Coil Busses, RTD's and Warm-up Heaters	Nothing	~~146 μA~~ 528 μA

Hipot Coil to Heaters and Ground.

High Potential	Grounded	Floating	Leakage
All Coils	Strip Heaters, Yoke, Q3 Instrumentation Bus, 8kA and 5kA Lead Busses and Corrector Coil Busses, RTD's and Warm-up Heaters	Nothing	249 μA

Technician(s) _____ Date 4-26-06

STOP

26.6 Ensure electrical measurements are acceptable and confirm Hypertronics Connector has been installed properly.

Responsible Authority/Physicist _____ Date 26-APR-2006

27.0 Production Complete

27.1 Process Engineering verify that the Q3 Cold Mass Module Assembly Traveler (5520-TR-333729) is accurate and complete. This shall include a review of all steps to ensure that all operations have been completed and signed off. Ensure that all Discrepancy Reports, Nonconformance Reports, Repair/Rework Forms, Deviation Index and dispositions have been reviewed by the Responsible Authority for conformance before being approved.

Comments:

Process Engineer/Designee

12/8/06
Date

Traveler Title:	Specification No:	Revision:	DR No:
LHC Q3 LMQXC Module Assembly Traveler	333729	F	4342

Step No:	Drawing No:	Routing Form No:	Serial No:	Rework ID:
24.9	390529		LMQXC09	0

Discrepancy Description:

5L bus to all other cables and strip heaters failed hipot @ 2800V. A second hipot was done of only the 5L to 5U bus cables. This hipot failed @ 2700 V. A third hipot was done of the 5L to everything EXCEPT the 5U cable. This hipot passed with a leakage of 103nA.

Originator: Damon Bice

Date: 4/3/2006 3:37:52 PM

Cause of Nonconformance:

Insulation between 5L and 5U edges worn away at the spot where they meet the edge of the small clamping fixture inside the end dome.

Responsible Authority: Andy Hocker

Date: 4/5/2006 4:12:35 PM

Disposition:

Wrap 5 mil Kapton around the 5L and around the 5U in the area where they are clamped. Re-hipot prior to end dome welding.

Responsible Authority: Andy Hocker

Date: 4/5/2006

Corrective Action to Prevent Recurrence:

None --- last magnet.

Responsible Authority: Andy Hocker

Date: 4/5/2006

Corrective Action/Disposition Verified By: Bob Jensen

Date: 5/30/2006 10:09:16 AM

Will Configuration be affected?: ☐ YES ☑ NO

Identified problem area:

☐ Material ☐ Manpower ☐ Method ☐ Machine ☑ Measurement

Reviewed By: Bob Jensen

Date: 5/30/2006

Traveler Title:	Specification No:	Revision:	DR No:
LHC Q3 LMQXC Module Assembly Traveler	333729	F	4343

Step No:	Drawing No:	Routing Form No:	Serial No:	Rework ID:
21.17	390529		LMQXC09	0

Discrepancy Description:

Hipot failure of the 5U to 5L through bus leads at 2700V. The suspect area from Dr 4342 had been reinsulated and the hipot redone. This failure re occurred after end dome was tacked and testing redone.

Originator: Damon Bice

Date: 4/10/2006 9:31:06 AM

Cause of Nonconformance:

Insulation failure between 5U and 5L leads in crossover block

Responsible Authority: Andy Hocker

Date: 4/11/2006 10:42:45 AM

Disposition:

Remove end dome and repair insulation in crossover block

Responsible Authority: Andy Hocker

Date: 4/11/2006

Corrective Action to Prevent Recurrence:

None --- last Q3 magnet

Responsible Authority: Andy Hocker

Date: 4/11/2006

Corrective Action/Disposition Verified By: Bob Jensen

Date: 5/30/2006 10:09:55 AM

Will Configuration be affected?: ☐ YES ☑ NO

Identified problem area:

☐ Material ☐ Manpower ☑ Method ☐ Machine ☐ Measurement

Reviewed By: Bob Jensen

Date: 5/30/2006

Traveler Title:	Specification No:	Revision:	DR No:
LHC Q3 LMQXC Module Assembly Traveler	333729	F	4344

Step No:	Drawing No:	Routing Form No:	Serial No:	Rework ID:
21.17	390529		LMQXC09	0

Discrepancy Description:

The 5 L bus lead failed hipot to 8U magnet lead. The failure occurred at 2700V, Max I failure.

Originator: Damon Bice

Date: 4/11/2006 7:40:10 AM

Cause of Nonconformance:

Insulation failure between 8U and 5L leads in crossover block

Responsible Authority: Andy Hocker

Date: 4/11/2006 10:47:05 AM

Disposition:

Add kapton insulation between 8U/5L leads and 8L/5U leads in crossover block

Responsible Authority: Andy Hocker

Date: 4/11/2006

Corrective Action to Prevent Recurrence:

None --- last Q3 magnet

Responsible Authority: Andy Hocker

Date: 4/11/2006

Corrective Action/Disposition Verified By: Bob Jensen

Date: 5/30/2006 10:10:28 AM

Will Configuration be affected?: ☐ YES ☑ NO

Identified problem area:

☑ Material ☐ Manpower ☐ Method ☐ Machine ☐ Measurement

Reviewed By: Bob Jensen

Date: 5/30/2006

TD - Engineering Fabrication Component Kit List

Process Engineering

Component Serial No.: LMQXC09
Kit submitted by: Bob Jensen 3173
Fermi ID No.: 315
Date submitted: 9-Jan-06
Need date: 13-Jan-06
Deliver to: ICB
Use with Traveler No.: 333729
Job No.: 248
M&S task number: 300 1.1.1.3.4
Drawing Title: Q3 MODULE ASSEMBLY
Drawing No.: ME-369900 Rev. C
Drawing Title: Q3 COLD MASS WELDED ASSEMBLY
Drawing No.: ME-390529 Rev. E

Material Control
Parts available

Verified by: M. Schmidt
Fermi ID No.: 04223N
Date submitted to stockroom:

RECEIVED
JAN 10 2006
MATERIAL CONTROL /IB4

Parts issued

Issued by: [illegible]
Fermi ID No.: 12792
Date issued: 1-13-06
Parts received by E&F: Bob Jensen
Fermi ID No.: 03150
Date received by E&F: 1/13/06

	Description	Dwg Size	Number	Rev	Unit	Quantity Required	Location	Quantity Issued	E&F Verified	Routing Form Number	Spares Number / Comment
1	26 GA. POLYIMIDE COATED WIRE (FOR VOLTAGE TAPS)	MA	369832	*	EA	8					
2	20 GA. POLYIMIDE COATED WIRE (FOR STRIP HTRS & WARMUP HTRS)	MA	369833	*	EA	6					
3	WARM-UP HEATER	MA	369834	A	EA	2	19C4	2	✓	82616	43 pcs.
4	RTD ASSEMBLY	MA	369835	A	EA	2	ICB HAS				
5	30 GA. POLYMIDE COATED CABLE (FOR RTD WIRE EXTENSIONS)	MA	369836	*	-	A / R					
6	RTD MOUNTING BLOCK	MB	369893	B	EA	2	19C8	∅			APR ~~2 pcs.~~ ∅
7	.010" SOLDER STRIP	MA	369904	*	m	1	M14,2	1	✓	78514	4 pcs.
8	KESTER 135 FLUX	MA	369911	*		A / R					
9	KEVLAR YARN	MA	369912	*	-	A / R					
10	SHCS #4-40 x 1/4" LG. S.S.	MA	369938	*	EA	4	19D2	4	✓	79032	50 pcs.
11	WARM-UP HEATER BASE PLATE	MA	369997	A	EA	2	20A1	2	✓	80096	2 pcs.

TD - Engineering Fabrication Component Kit List

	Description	Dwg Size	Number	Rev	Unit	Quantity Required	Location	Quantity Issued	E&F Verified	Routing Form Number	Spares Number / Comment
12	SHCS M8 x 1.25 x 50mm LG S.S.	MA	393020	*	EA	1	22C3	1	✓	82378	27 pcs.
13	SHCS #6-32 UNC x 1 LG S.S.	MA	393082	*	EA	4	23A4	4	✓	81360	52 pcs.
14	NUT, HEX #6-32 UNC S.S.	MA	393089	*	EA	4	23A5	4	✓	82599	127 pcs.
15	FHSCS M8 x 18mm LG S.S.	MA	393175	*	EA	2	23A8	2	✓	82114	80 pcs.
16	#10-32 x 5/8" LONG SHCS - S.S.	MA	393176	*	EA	2	23B1	2	✓	82115	88 pcs.
17	RTD SCREWS	MA	393180	*	EA	4	23B2	4	✓	79631	133 pcs.
18	RTD WASHERS	MA	393181	*	EA	4	23B3	4	✓	81827	50 pcs.
19	SHCS, 5/16-18 UNC x 1 1/4 LG S.S. (FOR SPLICE HOUSING)	MA	393263	*	EA	8	23B8	8	✓	83268	78 pcs.
20	SCREW, FLAT HEAD SOCKET M12 x 1.75 x 20mm LG S.S.	MA	393291	*	EA	2	23D1	2	✓	80694	75 pcs.
21	HHCS M4 x .7 x 20mm LG S.S.	MA	393404	*	EA	4	R1,2,2	4	✓	82279	134 pcs.
22	FHSCS 1/4-28 UNF x 1/2 LG S.S.	MA	393405	*	EA	4	R1,2,2	4	✓	82278	86 pcs.
23	SHCS M8 x 1.25 x 40mm LG S.S.	MA	393409	*	EA	1	24B8	1	✓	82393	95 pcs.
24	SHCS 1/4-20 UNC x 1.00 LG S.S.	MA	393422	*	EA	4	R1,2,2	4	✓	82395	76 pcs.
25	SHCS, 5/16-18 UNC-2A x 1.00 LG S.S.	MA	393431	*	EA	2	24C3	2	✓	82757	37 pcs.
26	SHCS, M6 x 20mm LG S.S.	MA	393444	*	EA	4	24C3	4	✓	82758	80 pcs.
27	IP (LEAD) END BUS SPLICE CLAMP ASSEMBLY / Q3	MD	430031	B	EA	1	R1,3,2	1	✓	81915	1 pc
28	NOMEX STRIP - .010" THICK	MB	430064	*		ICB HAS					
29	NON-IP END BUS CROSSOVER BLOCK ASSEMBLY	MD	430081	A	EA	1	R1,2,5	1	✓	82624	2 pcs.
30	FACE PLATE FOR MCBXA CORRECTOR LEADS	MD	430083	A	EA	1	R1,3,3	1	✓	83539	1 pc
31	CORRECTOR WIRE CHANNEL BLOCK	MB	430091	*	EA	2	R2,2,2	2	✓	83839	6 pcs.

TD - Engineering Fabrication Component Kit List

	Description	Dwg Size	Number	Rev	Unit	Quantity Required	Location	Quantity Issued	E&F Verified	Routing Form Number	Spares Number / Comment
32	CORRECTOR WIRE SPLICE CLAMP COVER	MB	430092	*	EA	2	R2,2,3	2	✓	83844	6 pcs.
33	IP END BUS CROSSOVER BLOCK ASSEMBLY	MD	430095	B	EA	1	R8,2,4	1	✓	82625	2 pcs.
34	Q3 NON-LEAD END (NON-IP END) SPIDER ASSEMBLY	MB	430096	A	EA	1	R1,1,1	1	✓	82581	1 pc
35	SIDE CABLE CLAMP ASSEMBLY	MC	430103		EA	2	R1,3,3	2	✓	83970	8 pcs.
36	CENTER CABLE INSULATOR - BOTTOM	MC	430110	*	EA	2	R2,2,2	2	✓	82013	7 pcs.
37	MCSOX SPLICE PLATE MOUNTING BAR	MC	430128	A	EA	2	R2,2,3	2	✓	82318	2 pcs.
38	MCSOX SPLICE PLATE MOUNTING RING	MC	430129	*	EA	1	R2,3,3	1	✓	82144	1 pc
39	MCSOX CORRECTOR SPLICE FACE PLATE	MD	430130	C	EA	1	R1,1,2	1	✓	82521	1 pc
40	NON-IP (LEAD END) CORRECTOR BUS BUNDLE BRACKET	MC	430134	A	EA	1	R2,2,3	1	✓	83177	1 pc
41	CORRECTOR COIL FACE PLATE CLAMP	MB	430135	*	EA	1	R2,2,3	1	✓	81967	1 pc
42	HARNESS BLOCK	MB	430144	*	EA	2	26B1	2	✓	82152	3 pcs.
43	INSULATED EXPANSION LOOP TAIL	MB	430145	*	EA	1					
44	VOLTAGE TAPS SPLICE BLOCK	MC	430146	*	EA	1	R1,1,3	1	✓	82314	2 pcs.
45	Q3 LE UPPER SUSPENSION BRACKET WELDMENT	MC	430159	A	EA	1	R1,3,2	1	✓	82448	2 pcs.
46	Q3 LE LOWER SUSPENSION BRACKET WELDMENT	MD	430160	A	EA	1	R1,3,2	1	✓	82449	2 pcs.
47	CORRECTOR EXPANSION LOOP BUS CLAMP	MB	430168	*	EA	2	R1,1,3	2	✓	82626	4 pcs.
48	CONNECTOR, PANDUIT CRIMP SPLICE TYPE 16-22 WIRE GAUGE	FERMI STOCK	#1110-0550	*	EA	10	ICB HAS				
49	TAPE, ELECTRICAL, GLASS CLOTH "3M SCOTCH #27" 1/2"	FERMI STOCK	#1130-2050	*		A / R					
50	MQSX CORRECTOR MAGNET	CERN	SUPPLIED	*		ICB HAS					
51	MCSOX CORRECTOR MAGNET	CERN	SUPPLIED	*		ICB HAS					

TD - Engineering Fabrication Component Kit List

	Description	Dwg Size	Number	Rev	Unit	Quantity Required	Location	Quantity Issued	E&F Verified	Routing Form Number	Spares Number / Comment
52	MQSXA CORRECTOR MAGNET	CERN	SUPPLIED	*		ICB HAS					
Q3 INSTRUMENTATION WIRE FEEDTHRU ASSEMBLY		MB	430074	*	EA	1					
50	WIRE FEED-THRU TUBE	MB	369827	A	EA	3	ICB HAS				
51	SLEEVE INST. WIRE TUBE	MB	369996	A	EA	3	ICB HAS				
52	ANCHOR - INST. WIRE TUBE	MB	430009	*	EA	1	ICB HAS				
53	END INSTRUMENTATION WIRE TUBE	MB	430011	*	EA	1	ICB HAS				
HYPERTRONICS CONNECTOR ASSEMBLY 28 UNITS - Q3 MAGNET (LEAD END)		MB	418118	*	EA	1	Place part #'s 54-63 in one bag and label as MB-418118				
54	28 UNIT MALE (PIN) RACK	MA	418106	A	EA	1	R1,1,2	1	✓	N/A	1 pc
55	TIE-DOWN LINK	MA	418109	*	EA	4	ICB Has				
56	CLAMPING BAR	MA	418112	*	EA	1	25C2	1	✓	83189	30 pcs.
57	GROMMET	MA	418113	*	EA	1	25C2	1	✓	83080	48 pcs.
58	THREADED STUD ASSEMBLY	MA	418114	*	EA	4	MTF Has				
59	SUPPORT ARM WELDMENT (28 UNIT)	MC	418115	*	PAIR	1	25C3	1	✓	80120	3 pcs.
60	SCREW - #6-32 X 3/8 LG.	MA	418116	*	EA	4	R1,1,2	4	✓	83458	95 pcs.
61	SCREW - #4-40 X 1/2 LG.	MA	418117	*	EA	4	R1,1,2	4	✓	79891	88 pcs.
62	ANTI-ARC KAPTON	MA	418143	*	EA	17	R1,1,2	17	✓	N/A	1208 pcs.
63	CONNECTOR COVER & ACCESS COVER (28-UNITS)	MC	418067-A2	*	PAIR	1	R1,1,2	1	✓	N/A	2 pcs.
HYPERTRONICS CONNECTOR ASSEMBLY 23 UNITS - Q3 MAGNET (RETURN END)		MB	418132	*	EA	1	Place part #'s 64-69 in one bag and label as MB-418132				
64	CLAMPING BAR	MA	418112	*	EA	1	25C2	1	✓	83189	30 pcs.
65	GROMMET	MA	418113	*	EA	1	25C2	1	✓	83080	48 pcs.

TD - Engineering Fabrication Component Kit List

	Description	Dwg Size	Number	Rev	Unit	Quantity Required	Location	Quantity Issued	E&F Verified	Routing Form Number	Spares Number / Comment
66	THREADED STUD ASSEMBLY	MA	418114	*	EA	4	MTF Has				
67	SCREW - #6-32 X 3/8 LG.	MA	418116	*	EA	4	R1,1,2	4	✓	83458	95 pcs.
68	23 UNIT FEMALE (PIN) RACK	MA	418136	A	EA	1	MTF Has				
69	CONNECTOR COVER & ACCESS COVER (23-UNITS)	MC	418067-A	A1	PAIR	1	R1,1,2	1	✓	N/A	1 pc
	Q3 LEAD END (IP END) SPIDER ASSEMBLY	MD	430072	A	EA	1					
70	SHCS #8-32 x .75 LG. S.S.	MA	393071	*	EA	4	23A2	4	✓	81434	41 pcs.
71	WASHER, NARROW, FLAT #6 S.S.	MA	393088	*	EA	2	23A5	2	✓	81361	468 pcs.
72	HEX NUT #6-32 UNC-2B S.S.	MA	393089	*	EA	2	23A5	2	✓	81362	127 pcs.
73	SHCS #6-32 UNC-2A x .625 LG S.S.	MA	393264	*	EA	4	23B8	4	✓	82600	108 pcs.
74	SHCS #6-32 UNC-2A x 1.25 LG S.S.	MA	393266	*	EA	2	23C1	2	✓	81107	63 pcs.
75	(Q3) MODULE ASSEMBLY BUS SPIDER ASSEMBLY	MD	430044	C	EA	1	25D5	1	✓	81469	34 pcs.
76	BUS SPIDER HOUSING - BOTTOM	MB	430055	B	EA	1	13A1	1	✓	83742	2 pcs.
77	BUS SPIDER HOUSING - COVER PLATE	MB	430073	*	EA	1	IB4 Bin	1	✓	81455	2 pcs.
78	SPIDER BUMPER	MB	430075	B	EA	2	26A3	2	✓	81477	106 pcs.
79	SPIDER BUS HOUSING COVER - THIN	MB	430176	*	EA	1	R2,2,2	1	✓	82705	1 pc
80	INSULATED BEAM TUBE	MD	369838	A	EA	1	ICB				4 pcs.
81	MCBX CORRECTOR MOUNTING RING	ME	390037	C	EA	1	P/N	1	✓	80790	1 pc
82	MQXA (Q1&Q3) INTERFACE SPECIFICATION	ME	390108	E	-	ICB HAS					
83	MQSXA CORRECTOR MOUNTING RING	MD	390209	C	EA	1	P/N	1	✓	80791	1 pc
84	IP END DOME ASSEMBLY	ME	390221	C	EA	1	NT06827	1	78610	✓	1 pc

TD - Engineering Fabrication Component Kit List

	Description	Dwg Size	Number	Rev	Unit	Quantity Required	Location	Quantity Issued	E&F Verified	Routing Form Number	Spares Number / Comment
85	MCBX CORRECTOR MTG FLAT WASHER	MB	390228	*	EA	12	21C4	12	✓	83114	20 pcs.
86	1/2"-20 UNF X 2.0" LG. SILVER PLATED SCREW FOR Q1/Q3 MQSXA	MA	390246	*	EA	8	21C6	8	✓	74618	87 pcs.
87	1/2"-20 UNF X 3.0" LG. SILVER PLATED SCREW FOR Q1/Q3 MCBX	MA	390247	*	EA	4	21C6	4	✓	74622	24 pcs.
88	MQSXA CORRECTOR TRANSPORTATION RING ADJUSTMENT SCREW	MB	390270	A	EA	4	21C7	4	✓	76665	4 pcs.
89	MCBX CORRECTOR TRANSPORTATION RESTRAINT NUT	MC	390294	*	EA	4	21D4	4	✓	76666	4 pcs.
90	(BEAM TUBE) COLD BORE FLANGE	MC	390300	B	EA	2	R10,1,2	2	✓	77028	16 pcs.
91	MCBX CORRECTOR MAGNET WELDMENT	MD	390312	*		ICB HAS					
92	SHIM, 0.05mm (.002")	MA	390482	*	EA	8	R2,2,4	8	✓	79123	40 pcs.
93	SHIM, 0.13mm (.005")	MA	390483	*	EA	8	R2,2,4	8	✓	79124	60 pcs.
94	SHIM, 0.25mm (.010")	MA	390484	*	EA	8	R2,2,4	8	✓	79125	32 pcs.
95	SHIM, 0.38mm (.015")	MA	390485	*	EA	8	R2,2,4	8	✓	79126	36 pcs.
96	Q3 A34B4 (MCSOX) CORRECTOR MOUNTING RING	ME	390664	*	EA	1	R1,3,3	1	✓	80927	1 pc
97	BODY TUBE EXTENSION WELD BACKING RING	MC	390666	*	EA	1	R7,3,4	1	✓	80910	1 pc
98	NON-IP END BODY TUBE EXTENSION WELDMENT	MD	390667	*	EA	1	Site 38	1	✓	81846	1 pc
99	Q3 COLDMASS NON-IP END DOME WELDMENT - MODIFIED	MD	390668	*	EA	1	Site 38	1	✓	81847	1 pc
100	Q1 & Q3 COLD MASS FIDUCIAL MOUNTING BLOCK	MB	390808	*	EA	2	R1,1,3	2	✓	82260	4 pcs.
101	NO. 10 (.190") - 32UNF X .188" LG. CUP POINT SET SCREW; 18-8 SST	MA	393030	*	EA	8	22C8	8	✓	82379	103 pcs.
102	A34B4 CORRECTOR MAGNET (MCSOX CORRECTOR MAGNET)		Item #12 on ME-390529	*		ICB HAS					
103	MQSXA CORRECTOR MAGNET		Item #9 on ME-390529	*		ICB HAS					

CERN LHC MQXA

Acceptance Test at FNAL

QUALITY RECORD

Cryogenics Science Center

KEK, High Energy Accelerator Research Organization

Magnet ID :_____

Date of approval :_____

Approved by :_____ (FNAL)

:_____ (KEK)

Ver. 0
Ver A (with initial results)

1. Appearance Check

Procedure	Criteria
Check appearance of the magnet by visual inspection.	No harmful defects or deformation
Result at TOSHIBA	
Acceptable	
Result at FNAL	

2. Interface Dimensions

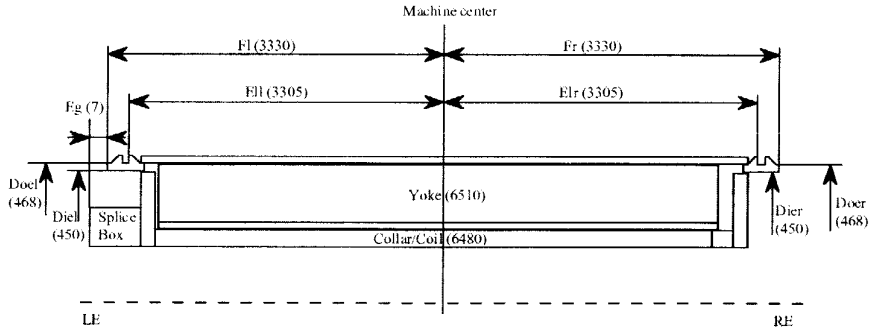

1) Dimensions	Unit:mm
Procedure	Criteria
1) Dimension Check Measure following dimensions a, b, c : Measuring range: every 45 deg. from 0 deg. d : Splice Box : four points	
a) Machine center - Interface	a) 3330 –6/+0
b) Interface outer diameter (Doel,Doer)	b) ϕ468 –4/+0
c) Interface inner diameter (Diel,Dier)	c) ϕ450 –4/+0
d) End Ring - Splice box(Eg)	d) 7 -5/+5

Result at TOSHIBA

Critera	3330 -6/+0		ϕ468 -4/+0		ϕ450 -4/+0		7
Position	Fl	Fr	Doel	Doer	Diel	Dier	Eg
0 deg.	3330.0	3330.5	468.08	467.98	450.56	450.31	6.56
45 deg.	3330.0	3330.5	467.00	466.80	449.44	449.24	
90 deg.	3330.0	3330.5	467.12	467.30	449.60	449.58	6.37
135 deg.	3330.0	3330.5	467.25	466.91	449.40	449.26	
180 deg.	3330.0	3330.0					5.89
225 deg.	3330.0	3330.5					
270 deg.	3330.0	3331.0					6.66
315 deg.	3330.0	3331.0					
Result	Acceptable		Acceptable		Acceptable		Acceptable

Result at FNAL

Critera	3330 -6/+0		ϕ468 -4/+0		ϕ450 -4/+0		7
Position	Fl	Fr	Doel	Doer	Diel	Dier	Eg
0 deg.	3330.0	3330.0					
~~45 deg.~~							
90 deg.	3330.0	3330.0					
~~135 deg.~~							
180 deg.	3330.0	3328.5*					
~~225 deg.~~							
270 deg.	3330.0	3330.5					
~~315 deg.~~							
Result							

2) End ring interface		
Procedure		Criteria
Check the weld edge preparation using ϕ449 +0/-0.02 gauge.		1) The gauge shall be inserted into the end ring. 2) Measurement data will be reported if the gage cannot be inserted.
Measurement part	Result at TOSHIBA	Remarks
LE side	Acceptable	LE : 6mm
RE side	Acceptable	RE : 8mm
Measurement part	Result at FNAL	Remarks
LE side		
RE side		

3) Radial envelope	
Procedure	Criteria
Check shell radial envelope using ϕ530mm gauge. (dummy cold-mass support)	The gauge shall pass the magnet.
Result at TOSHIBA	
Acceptable	
Result at FNAL	

4) Magnet bore	
Procedure	Criteria
Check appearance of the magnet bore by visual inspection.	No harmful defects or deformation
Result at TOSHIBA	
Acceptable M.P.Lap was dameged at end section (LE side and RE side)	
Result at FNAL	

5) Magnet bus slot	
Procedure	Criteria
Check the bus slot using bus line model gauge.	The gauge shall pass the magnet bus slot.
Result at TOSHIBA	
Acceptable	
Result at FNAL	

6) Weight	
Procedure	Criteria
Measure the magnet weight.	Weight < 8500kg
Result at TOSHIBA	
8350 Kg	Acceptable
Result at FNAL	

7) Length of magnet lead, QPH wire, Voltage taps		
Procedure	Criteria	
Check the lengths of magnet lead, QPH wire, voltage taps.	1) Magnet lead : > 500mm from magnet LE end plate 2) Voltage taps wire : > 2000mm from magnet LE end plate 3) QPH wire : >2000mm from magnet LE end plate	
Result at TOSHIBA		
Measuring wire	Measured Value	Result
1) Magnet lead	> 500mm	Acceptable
2) Voltage taps	>2000mm	Acceptable
3) QPH wire	> 2000mm	Acceptable
Result at FNAL		
Measuring wire	Measured Value	Result
1) Magnet lead		
2) Voltage taps		
3) QPH wire		

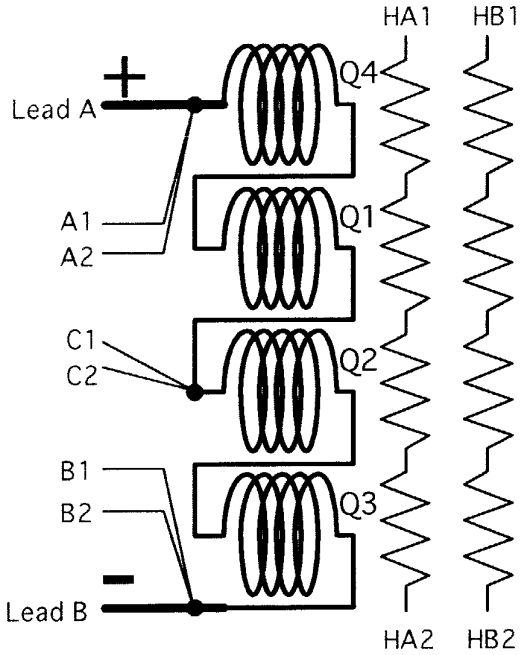

8) Cable tags	
Procedure	Criteria
Check the cable tags.	Consistent to the tag No. table.

Vtaps & QPH Tag No. table

Lead	Tag Name	Description
Voltage taps	A1, A2	Taps from A lead
	B1, B2	Taps from B lead
	C1, C2	Center taps
Quench heaters	HA1, HA2	Heater A
	HB1, HB2	Heater B

Result at TOSHIBA	
1)Voltage taps	Acceptable
2)Quench heaters	Acceptable
Result at FNAL	
1)Voltage taps	
2)Quench heaters	

3. Coil Resistance

Procedure	Criteria
Measure the magnet total resistance and coil temperature at coil current of DC1A. Calculate resistance at 20 °C; R_{20}. $R_{20}=V/I/(1+0.00393*(T_{coil}-20))$ V : Voltage between magnet leads (V) I : Coil current obtained by shut resistor (A) T_{coil} : coil temperature (°C)	1) Compare with R_{20} at TOSHIBA. Variation of R_{20} < 0.005 Ω 2) Voltage taps(C-A, C-B): Measurement Only

Result at TOSHIBA

T_{coil}	Not Reported

Magnet total voltage (V)	Current (A)	Magnet total resistance R_{20} (Ω)
Not Reported	Not Reported	6.82726

Voltage taps tag No.	V (V)	I (A)	R_{20} (Ω)	Voltage taps tag No.	V (V)	I (A)	R_{20} (Ω)
C1 - A1	Not Reported	Not Reported	3.41087	C2 - A1	Not Reported	Not Reported	3.41093
C1 - A2	Not Reported	Not Reported	3.41092	C2 - A2	Not Reported	Not Reported	3.41094
C1 - B1	Not Reported	Not Reported	3.41100	C2 - B1	Not Reported	Not Reported	3.41100
C1 - B2	Not Reported	Not Reported	3.41100	C2 - B2	Not Reported	Not Reported	3.41100

Acceptable

Result at FNAL

T_{coil}			
Magnet total voltage (V)	Current (A)	Magnet total resistance R_{20} (Ω)	Variation (Ω) ($R_{20\text{-TOSHIBA}}$ - $R_{20\text{-FNAL}}$)
Voltage taps tag No.	R_{20} (Ω)	Voltage taps tag No.	R_{20} (Ω)
C1 - A1	3.427	C2 - A1	3.426
C1 - A2	3.427	C2 - A2	3.426
C1 - B1	3.426	C2 - B1	3.425
C1 - B2	3.426	C2 - B2	3.424

E. [illegible] 6-14-05

4. Instrumentations

1) Voltage taps

Procedure	Criteria
Check resistance of all voltage taps by four terminal method at 1A. Magnet lead : Q4 4th : + Magnet lead : Q3 3rd : -	Magnet lead + : A1, A2 (Pole4 Out) Magnet lead - : B1, B2 (Pole3 Out) Center taps : C1, C2 (Pole1 Out) Variation of R_{20}(A1),R_{20}(A2) : < 0.1% Variation of R_{20}(B1),R_{20}(B2) : < 0.1% Variation of R_{20}(C1),R_{20}(C2) : < 0.1%

Result at TOSHIBA

Voltage taps No.	Resistance(Ω)	Voltage taps No.	Resistance(Ω)	Variation(%)	Result
A1	0.00265	A2	0.00263	0.749	Acceptable
C1	3.41348	C2	3.41348	0.000	Acceptable
B1	6.82448	B2	6.82448	0.000	Acceptable

Result at FNAL

Voltage taps No.	Resistance(Ω)	Voltage taps No.	Resistance(Ω)	Variation(%)	Result
A1	.003	A2	.002		
C1	3.426	C2	3.424		
B1	6.850	B2	6.848		

2) QPH

Procedure	Criteria
Measure the resistance of QPH.	QPH resistance : 30 +4/-4Ω (HA,HB)

Result at TOSHIBA

QPH No.	QPH Resistance(Ω)	Result
HA	28.5	Acceptable
HB	28.6	Acceptable

Result at FNAL

QPH No.	QPH Resistance(Ω)	Result
HA	28.0	
HB	28.1	

E. Stuart
6-14-05

5. Coil Inductance

Procedure	Criteria
Measure inductance of magnet at frequencies of 100Hz and 1kHz using LCR meter.	1) Variation of inductance Voltage taps No. C-A, inductance Voltage taps No. C-B : < 5% 2) Total inductance of the magnet :Measurement only

Result at TOSHIBA

Voltage taps tag No.	100Hz	Result (%)	1kHz	Result (%)	Voltage taps tag No.	100Hz	Result (%)	1kHz	Result (%)
C1 - A1	37.14	0.03	13.396	0.01	C2 - A1	37.14	0.01	13.396	0.01
C1 - A2	37.14		13.396		C2 - A2	37.13		13.396	
C1 - B1	37.13		13.397		C2 - B1	37.13		13.397	
C1 - B2	37.13		13.398		C2 - B2	37.13		13.398	

	100Hz	1kHz
Magnet	87.23	31.13

Acceptable

Result at FNAL

Voltage taps tag No.	100Hz	Result (%)	1kHz	Result (%)	Voltage taps tag No.	100Hz	Result (%)	1kHz	Result (%)
C1 - A1	37.199		13.490		C2 - A1	37.198		13.489	
C1 - A2	37.198		13.490		C2 - A2	37.198		13.490	
C1 - B1	37.190		13.484		C2 - B1	37.190		13.484	
C1 - B2	37.190		13.484		C2 - B2	37.190		13.484	

	100Hz	1kHz
Magnet	87.40	31.63

E [illegible]
6-14-05

6. Turn to Turn Insulation

Procedure	Criteria
Apply impulse voltage of 1000V between the magnet leads and record the signal. Instrumentation: Impulse generator, recorder	Compare the signal with one at KEK. Attach rthe chart.
Result at TOSHIBA	
Acceptable	See appendix
Result at FNAL	

7. Coil Insulation

1) Insulation Resistance			
Procedure		Criteria	
Apply 1kV-DC to the coil in 1 min. and measure insulation resistance by using insulation tester. High voltage : Coils Ground : Collar, Yoke, Shell, QPH		Insulation resistance > 100MΩ	
Result at TOSHIBA			
Temperature(°C)	Humidity(%)	Insulation(MΩ)	Result
24	30	> 2000	Acceptable
Result at FNAL			
Temperature(°C)	Humidity(%)	Insulation(MΩ)	Result

2) Hi-pot test			
Procedure		Criteria	
Apply 3kV-DC to the coil in 1 min. and measure leak current or insulation resistance. High voltage : Coil Ground : Collar, Yoke, Shell, QPH		No break down Record leak current or resistance.	
Result at TOSHIBA			
Temperature (°C)	Humidity (%)	Leak current (mA)	Result
24	30	0.00	Acceptable
Result at FNAL			
Temperature (°C)	Humidity (%)	Leak current or resistance	Result

8. QPH Insulation

1) Insulation Resistance				
Procedure			Criteria	
Apply 1kV-DC to the QPH in 1 min. and measure insulation resistance by using insulation tester. High voltage : QPH Ground : Coil, Collar, Yoke, Shell			Insulation resistance > 100MΩ	
Result at TOSHIBA				
Heater No.	Temperature (°C)	Humidity (%)	Insulation(MΩ)	Result
HA	24	30	> 2000	Acceptable
HB			> 2000	Acceptable
Result at FNAL				
Heater No.	Temperature (°C)	Humidity (%)	Insulation(MΩ)	Result
HA				
HB				

2) Hi-pot test				
Procedure			Criteria	
Apply 3kV-DC to the QPH in 1 min. and measure leak current or insulation resistance. High voltage : QPH Ground : Coil, Collar, Yoke, Shell			No break down Record leak current or resistance.	
Result at TOSHIBA				
Heater No.	Temperature (°C)	Humidity (%)	Leak current (mA)	Result
HA	24	30	0.00	Acceptable
HB			0.00	Acceptable
Result at FNAL				
Heater No.	Temperature (°C)	Humidity (%)	Leak current or resistance	Result
HA				
HB				

9. QPH Discharge Test

1) Appearance check	
Procedure	Criteria
Check appearance of QPH wires by visual inspection.	No harmful defects or deformation.
Result at TOSHIBA	
Acceptable	
Result at FNAL	

2) QPH discharge test		
Procedure		Criteria
Charge the power supply above 850 V and fire QPHs.		No strange signal observed. Attach the chart.
Result at TOSHIBA		
HA	Acceptable	See appendix
HB	Acceptable	See appendix

3) QPH resistance				
Procedure			Criteria	
Measure resistance before/after the discharge test.			Resistance change < 10%	
Result at TOSHIBA				
QPH No.	Before (Ω)	After (Ω)	Variation (%)	Result
HA	28.5	28.5	0.0	Acceptable
HB	28.6	28.6	0.0	Acceptable
Result at FNAL				
QPH No.	Before (Ω)	After (Ω)	Variation (%)	Result
HA				
HB				

CERN
CH-1211 Geneva 23
Switzerland

the **Large Hadron Collider** project

AT MEL Document No.
LHC-MQSX-FR-0001 rev. **1.0**

EDMS Document No.

Certificate of Conformity

Part name:	MQSX Inner Triplet Skew Quadrupole Corrector		
LHC Identification No.:	HCMQSX_001-AN000003	Serial No.:	HCMQSX_001-AN000003
Shipped To:	CERN	***Shipment No:***	***01***
		Shipment	***30/05/03***
Manufacturer:	Ansaldo	***Order No.:***	CD1000630
Related tech. Specification:	LHC-MQSXA-CI-0001 and addenda		
Related drawings:	LHCMQSXA0020 (620RM9829)		
Responsible person at CERN:	Mikko Karppinen	***Tel.***	+41 22 767 4305
		E-mail.	Mikko.Karppinen@cern.ch
Responsible person at Ansaldo:	Gianluigi Gaggero	***Tel.***	+39 010 6489 210
		E-mail.	gaggero.gianluigi@as-g.it
Ansaldo certifies that the delivered material conforms to the technical specification mentioned above:			
Date: 29/05/03	***Name: G. Gaggero***		***Signature:*** Gianluigi Gaggero

Acceptance test results

		MQSX	Remarks:
RT dc resistance (Ω):	***Ansaldo:***	***7.78***	
	CERN:	~~7.78~~ CF	YAHALLA 4300 @ 10mA
	CMA[1]:	7.53	
Inductance @1 kHz/100 Hz (mH)	***Ansaldo:***	***14.34*** ***14.20***	
	CERN		
	CMA:	14.20/14.20	Agilent 4263B 1kHz 14.20 / 100Hz 14.20
R.T. leakage current to ground @ 1.5 kV (μA):	***Ansaldo:***	***0.34***	
	CERN:		
	CMA:	.009	Vitrek 944i 500 V 10V/5

	Cold Mass Assembler
Visual inspection	
Name / Signature	
Date	

Accepted: ☐

Rejected: ☐

Comments (Ansaldo):	

Comments (CERN):	***Magnetic axis have not been measured at warm.***
	Scribe line made relative to the dowel pin holes on the conn. plate.

Comments (CMA):	

CERN
CH-1211 Geneva 23
Switzerland

the **Large Hadron Collider** project

LHC ICP Document No.
LHC-MCBX-FR-0001 rev. **1.0**

EDMS Document No.
———

Certificate of Conformity

Part name:	MCBX Inner Triplet Dipole Corrector		
LHC Identification No.:	HCMCBX_001-SI000008	Serial No.:	**HCMCBX_001-SI000008**
Shipped To:	CERN	***Shipment No:***	***08***
		Shipment	***30/06/03***
Manufacturer:	SIGMAPHI	Contract No.:	F375/LHC/LHC
Related tech. Specification:	LHC-MCBX-CI-0001 and addenda		
Related drawings:	LHCMCBX_0012 (1525-CN-1001)		
Responsible person at CERN:	Mikko Karppinen	***Tel.***	+41 22 767 4305
		E-mail.	Mikko.Karppinen@cern.ch
Responsible person at SIGMAPHI:	Damien Neuvéglise	***Tel.***	+33 2 97 01 08 80
		E-mail.	dneuveglise@sigmaphi.fr
SIGMAPHI certifies that the delivered material conforms to the technical specification mentioned above:			
Date: 30/06/03	***Name: D.Neuvéglise***		***Signature: D.Neuvéglise***

Acceptance test results

		MCBXV (Inner)	***MCBXH (Outer)***	***Remarks:***
RT dc resistance (Ω):	***SIGMAPHI:***	***17.9***	***21.9***	
	CERN:	***17.44***	***21.37***	
	CMA[1]:	17.19	21.08	
Inductance @1 kHz/100 Hz (mH)	***SIGMAPHI:***	***66.01 / 113.1***	***68.09 / 161.9***	
	CERN	***34.63 / 72.07***	***45.32 / 87.91***	
	CMA:	34.567 / 71.973	45.265 / 87.796	
R.T. leakage current to ground @ 1.5 kV (μA):	***SIGMAPHI:***	***10***	***12.5***	
	CERN:	***0.004***	***0.011***	
	CMA:			

	Cold Mass Assembler	
Visual inspection		**Accepted:** ☐
Name / Signature		**Rejected:** ☐
Date		

Comments (SigmaPhi):	

Comments (CERN):	***The magnetic axis of this assembly has not been measured at warm.***
	The scribe line is made using the dowel pin holes on the connection plate as the reference.
	During the combined powering field was rotated 0-360 deg at the nominal current @ 1.9 K.

Comments (CMA):	

CERN
CH-1211 Geneva 23
Switzerland

the **Large Hadron Collider** project

AT MEL Document No.
LHC-MCSTX-FR-0001 rev. **1.0**

EDMS Document No.

Certificate of Conformity

Part name:	MCSTX Inner Triplet Sextupole Dodecapole Insert		
LHC Identification No.:	HCMCSTX001-CE000004	***Serial No.:***	**HCMCSTX001-CE000004**
Shipped To:	FNAL	***In MCBX assembly:***	HCMCBX_001-SI000008
		Shipment No:	***01***
Manufacturer:	CERN	***Shipment Date:***	***30/10/03***
Related tech. Specification:	LHC-MCSTX-CI-0001 (in preparation)		
Related drawings:	LHCMCSTX0001		
Responsible person at CERN:	Mikko Karppinen	***Tel.***	+41 22 767 4305
		E-mail.	Mikko.Karppinen@cern.ch
CERN certifies that the delivered material conforms to the technical specification mentioned above:			
Date: 22/10/03	***Name: M. Karppinen***		***Signature:*** *Mikko Karppinen*

Acceptance test results

		MCSX	***MCTX***	***Remarks:***
RT dc resistance (Ω):	***CERN:***	***27.84***	***98.69***	
	CMA[1]:	27.49	97.47	
Inductance @1 kHz/100 Hz (mH)	***CERN***	***2.25 / 4.77***	***24.25 / 31.37***	
	CMA:	2.249/4.771	24.236/31.372	
R.T. leakage current to ground @ 1.5 kV (μA):	***CERN:***	***0.0104***	***0.0104***	
	CMA:			

	Cold Mass Assembler
Visual inspection	
Name / Signature	
Date	

Accepted: ☐

Rejected: ☐

[1] Cold Mass Assembler

Comments (CERN):	***Magnetic axis have not been measured at warm.***

Comments (CMA):	

CERN
CH-1211 Geneva 23
Switzerland

the **Large Hadron Collider** project

AATNBLL Document No.
LHC-MCSOX-FR-0001 rev. **1.0**

EDMS Document No.

Certificate of Conformity

Part name:	MCSOX Inner Triplet Corrector Package		
LHC Identification No.:	HCMCSOX001-AN000003	Serial No.:	HCMCS~~OX001-AN000~~03
Shipped To:	CERN	***Shipment No:***	***01***
		Shipment	***14/11/03***
Manufacturer:	Ansaldo	***Order No.:***	CD1000630
Related tech. Specification:	LHC-MQSXA-CI-0001 and addenda		
Related drawings:	LHCMQSXA0020 (620RM9829)		
Responsible person at CERN:	Mikko Karppinen	***Tel.***	+41 22 767 4305
		E-mail.	Mikko.Karppinen@cern.ch
Responsible person at Ansaldo:	Gianluigi Gaggero	***Tel.***	+39 010 6489 210
		E-mail.	gaggero.gianluigi@as-g.it
Ansaldo certifies that the delivered material conforms to the technical specification mentioned above:			
Date: 11/11/03	***Name: G. Gaggero***		***Signature:*** Gianluigi Gaggero

Acceptance test results

		MCOSX	***MCOX***	***MCSSX***	***Remarks:***
RT dc resistance (Ω):	***Ansaldo:***	***11.99***	***13.04***	***13.61***	
	CERN:	***11.62***	***12.62***	***13.14***	
	CMA[1]:	11.87	12.89	13.42	VALHALLA 4300 @ 10 mA
Inductance @1 kHz/100 Hz (mH)	***Ansaldo:***	***3.31 3.30***	***4.51 4.50***	***7.80 7.80***	
	CERN	***3.31/3.31***	***4.50/4.50***	***7.80/7.81***	
	CMA:	3.31/3.31	4.50/4.51	7.81/7.81	Agilent 4263B
R.T. leakage current to ground @ 1.5 kV (μA):	***Ansaldo:***	***0.067***	***0.055***	***0.072***	
	CERN:	***0.78***	***1.39***	***0.42***	
	CMA:	.003	.006	.022	Vitrek 944i 500V 10V/s

	Cold Mass Assembler
Visual inspection	
Name / Signature	
Date	

Accepted: ☐

Rejected: ☐

[1] Cold Mass Assembler

Comments (Ansaldo):	

Comments (CERN):	***Magnetic axis have been measured at warm.***
	The scribe line is made relative to measured field at warm at CERN (correction of 3.07 mrad anti-clock-wise seen from the conn. end).
	The short between the MCSSX monitoring wires and the outer shell was repaired 13 October 2005.

Comments (CMA):	