Document ID:

8481

LHC Q3 LQXC Cryostat Final Assembly Traveler

333730 / Rev. D

Job No:	**389**
MSD Project/Task No.:	**300/1.1.1.6.3**
M + S Project/Task No.:	**300/1.1.1.6.3**

Place This Side Down For Scanning!!!

Magnet Travelers

LQXC09-0

Document ID:

8481

Job No.:

389

Project/Task No.

300/1.1.1.6.3

Series:

LQXC

Serial No:

LQXC09

Rework ID:

0

Specification No.:

333730

Revision:

D

LQXC09-0

Fermi National Accelerator Laboratory
Batavia, IL 60510

LARGE HADRON COLLIDER
Q3 - LQXC
CRYOSTAT FINAL ASSEMBLY TRAVELER

Reference Drawing(s):
Q3 Cryostat General Assembly (ME-390132)
Q3 Cryostat Assembly Internal Piping (ME-390213)

Project/Task Number: *300/1.1.1.6.3*

Released By: *Bob Jensen* **Magnet/Device Series:** *LQXC*

Date Issued: *1/30/2006 9:00:53 AM* **Scanned Pages:** 50

Prepared by: J. Szostak

Title	Signature	Date
TD / E&F Process Engineering	*Bob Jensen* Bob Jensen / Designee	*9/27/05*
TD / LHC Production Supervisor	*Jim Rife* Jim Rife / Designee	*9/27/05*
TD / LHC Production Engineer	*Rodger Bossert* Rodger Bossert / Designee	*9/27/05*
TD / LHC Project Engineer Cryostat	*Tom Nicol* Tom Nicol / Designee	*9/27/05*
TD / LHC Project Physicist	*Jim Kerby* Michael Lamm / Designee	*9/27/05*
TD / LHC Program Manager	*Jim Kerby* Jim Kerby / Designee	*9/27/05*

Revision Page (1 of 3)

Revision	Step No.	Revision Description	TRR No.	Date
None	N/A	Initial Release	N/A	9/10/04
A	4.4	Modified Step. Changed Qty of Pipe Supports (MD-390092) from 2 to 3 per LQXC01.	1689	12/15/04
	5.1	Added Step. "Install the Threaded Rods (Tie Rod Assembly) (MC-390638). See copy of step 19.9 (Q3 Module Assembly Traveler, TR-333729) in designated book, for the distance between the Suspension Rings. Record the previously recorded measurements below." per TR-333730, LQXC01 and Tom Page.		
	5.8	Moved Step. "Install the Cold Mass Insulation Mounting Lug Blankets (MC-390496)." per TR-333730, LQXC01 and Tom Page. New Step 5.2.		
	5.10	Modified Step. Added "Ensure the shield is not sagging prior to the final tightening of the shield screws." New Step 5.11. **DR No. HGQ-0509.**		
	7.2	Modified Step. Added Picture of Corrector Bus Leads. Modified Table.		
B	1.6	Added Step. "Protect the bellows during all stages of production." **DR No. HGQ-0500.**	1711	5/19/05
	3.4	Modified Step. Changed to "Attach the Leak Check sticker for the Vacuum Vessel Assembly (ME-390133) per ES-107240 to the table below." Per **DR No. HGQ-0469**.		
	4.0	Modified Step. Added, removed and re-arranged sequence of steps per marked up traveler from LHC Production Engineer.		
	4.41	Added Step. "Install the Fiducial Mounting Blocks (MB-390808) per Q3 Cold Mass Welded Assembly (ME-390529)."		
	4.42	Added Step. "Weld the Fiducial Mounting Blocks (MB-390808) per Q3 Cold Mass Welded Assembly (ME-390529)."		
	4.45	Modified Step. Added more Leak Check boxes for all three 4.5k Intercept Line Leak Checks. Added picture showing locations of each and numbering.		
	4.46	Added Step. "Leak check the Cooldown Line (MD-390225)." per production request.		
	4.47	Added Step. "Leak check the Pumping Line (MB-390224)." per production request.		
	4.66	Modified Step. Added pictures showing each of the three 4.5k Intercept Lines (MB-390226).		
	4.67	Added Step. "Leak check the Cooldown Line (MD-390225)."		
	4.68	Added Step. "Leak check the Pumping Line (MB-390224)."		
	8.5	Removed Step. "Install the Vinyl Flange Covers (MA-390491), (MA-390492), (MA-390493), (MA-390494), & the Alignment Fiducial Covers (MA-390495)." Moved to Shipping Traveler per production request.		
	8.5	Added Step. "Perform a pressurized Leak Check of the Cryostat Assembly." Per LQXC02.		

Revision Page (2 of 3)

Revision	Step No.	Revision Description	TRR No.	Date
C	6.6	Modified Step. Changed to "When the Cold Mass is fully inserted, install the "Top" Suspension System Adjusting Screws (MB-390039) and the "Bottom" (C936 Bearing Bronze) Suspension System Adjusting Screws (MB-390878)." **Per DR No. 4214.**	1742	8/3/05
	7.1	Modified Step. Modified Electrical Table. Removed "Voltage Tap Serial Numbers".		
	8.5	Modified Step. "Perform a pressurized Helium Leak Check of the Cryostat Assembly."		
	8.6	Added Step. "Ensure all Pipe Supports are in place." Per LHC Project Engineer Cryostat.		
	8.7	Added Step. "Perform a Final Stretched Wire measurement." Per TR-333755 - LQXA04.		
	8.8	Added Step. "Perform a Final Cryostat Pipe Survey measurement." Per TR-333755 - LQXA04.		
D	4.5	Removed Step. "Install Pipe Anchor (MC-390486) on the Cold Mass per Q3 Cryostat Assembly - Internal Piping (ME-390213)." Per Damon Bice.	1765	9/27/05
	4.6	Modified Step. Modified Picture to "Installing/Uninstalling Blankets". Per Damon Bice.		
	4.14	Modified Step. Changed to "Slide the Heat Exchanger Outer Shell (ME-390215) through all three supports and both Suspension Rings." Per Damon Bice.		
	4.20	Modified Step. Removed one leak check sticker. Only need one.		
	4.37	Removed Step. "Modify the Heat Exchanger Spool, if necessary." Per Damon Bice.		
	4.39	Added Step. "Verify that the Q3 Heat Exchanger Corrugated Tube Assembly (ME-390216) is perpendicular to the Outer Shell Weldment (ME-390385) as per Q3 Heat Exchanger Assembly (ME-390214)." Per **DR No. 4270.**		
	4.44	Removed Step. "Position the Cooldown Line Tube (MB-390225)." Per production request. (Duplicated)		
	4.45	Removed Step. "Position the Pumping Line Tube (MB-390224)." Per production request. (Duplicated)		
	4.40	Removed Step. "Weld the Heat Exchanger Outer Shell Extension Spool (MD-390659) per Q3 Heat Exchanger Outer Shell Weldment (ME-390385)." (Same as step 4.37)		
	4.55	Modified Step. "Weld the Q3 Pipe Anchor (MC-390486) to the Cold Mass Assembly (ME-390528) as per Q3 Cryostat Assembly Internal Piping (ME-390213)." Moved step to new step 4.33 per production request.		
	4.58	Added Step. "Weld the 4.5k Intercept Tube Brace Bar (MB-390816) as per Q3 Cryostat Assembly Internal Piping (ME-390213)." Added picture. Per Damon Bice.		
	5.9	Modified Step. Added Picture from step 4.6.		
	5.13	Added Step. "Weld the Non IP Extension Spools (ME-390652, part of ME-390437) per Q3 Thermal Shield Cooling Tube Weldment (ME-390437)." Per production request.		
	5.14	Added Step. "Perform a Leak Check on the Q3 Thermal Shield Cooling Tube Weldment (ME-390437)." Per production request.		
	6.7	Modified Step. Changed to "Using Lower Suspension System Adjusting Screws, raise Cold Mass two (2) full turns." Per Damon Bice.		

Revision Page (3 of 3)

Revision	Step No.	Revision Description	TRR No.	Date
D (Continued)	6.8	Added Step. "Ensure Cold Mass has been adjusted in the Vacuum Vessel and that all eight (8) Adjusting Screw Holes are aligned with threaded holes of Suspension System." (Crew Chief Signoff) Per Damon Bice.	1765 (Continued)	9/27/05
	6.8	Removed Step. "Install Conflat Flanges (MA-390374) w/ Copper Gaskets (MA-390375) and Bolt Set (MA-390376) to Cryostat as per Q3 Cryostat General Assembly (ME-390132)." Moved to after Final Cryostat Pipe Survey Measurement. New Step 8.8. Per Damon Bice.		
	6.11	Added Step. "Install the Support Bracket Assemblies (Qty. 4) (MD-390783) as per Q3 Thermal Shield Assembly (ME-390436)." Per Damon Bice.		
	7.1	Modified Step. Changed Q3 Resistance table. Moved KEK label resistance check a1-b1 to Nominal resistance group 6.75 Ω to 6.85 Ω. Added MFR Ω column to RTD Table, per Damon Bice.		
	8.1	Modified Step. Changed to "Prepare the Power Leads and corrector bus to be cut by measuring and marking the appropriate cutoff location as per Q3 Module Assembly (ME-369900)." New Step 4.61.		
	8.2	Added Step. "Verify the mark has been placed at the appropriate cutoff location as per Q3 Module Assembly (ME-369900). ..." New Step 4.62.		
	8.2	Modified Step. Changed to "**IN THE PRESENCE OF THE RESPONSIBLE AUTHORITY**, cut the Power Leads and the corrector bus at the appropriate cutoff location (mark) as per as per Q3 Module Assembly (ME-369900)." New step 4.63.		
	8.7	Modified Step. "Perform a Final Stretched Wire measurement." Moved to New Step 8.1.		
	8.8	Modified Step. "Perform a Final Cryostat Pipe Survey measurement." Moved to New Step 8.2.		

Ensure appropriate memos and specific instructions are placed with the traveler before issuing the sub traveler binder to production.

1.0 General Notes

1.1 All steps that require a sign-off shall include the Technician/Technician(s)s first initial and full last name.

1.2 No erasures or white out will be permitted to any documentation. All incorrectly entered data shall be corrected by placing a single line through the error, initial and date the error before adding the correct data.

1.3 All Discrepancy Reports issued shall be recorded in the left margin next to the applicable step.

1.4 Personnel shall perform all tasks in accordance with current applicable ES&H guidelines and those specified within the step.

1.5 Cover the product/assembly with Green Herculite (Fermi stock 1740-0100) when not being serviced or assembled.

1.6 Protect the Bellows during all stages of production.

2.0 Parts Kit List

2.1 Attach the completed Parts Kit for this production operation to this traveler. Ensure that the serial number on the Parts Kit matches the serial number of this traveler. Verify that the Parts Kit received is complete.

Bob Johnson
Process Engineering/Designee

1/31/06
Date

3.0 Vacuum Vessel Preparation and Painting

3.1 Record the Vacuum Vessel Serial Number.

Q3-7

A Gould
Technician(s)

2/6/06
Date

3.2 Inspect the transition area between the Support Sections and Tube Sections. Grind smooth if necessary.

A Gould
Technician(s)

2/6/06
Date

3.3 Clean the Vacuum Vessel (ME-390133) using a vacuum cleaner or equivalent.

O. Friang
Technician(s)

2/6/06
Date

3.4 Attach the Leak Check sticker for the Vacuum Vessel Assembly (ME-390133) per ES-107240 to the table below.

Part No.								
PART NO. ME 390133		SCALE UNITS BEFORE HELIUM PROBE	SCALE UNITS WHILE ENCLOSURE FLOODING	DETERMINATION OF MINIMUM DETECTABLE LEAK				
DATE TIME	OPERATOR'S LAST NAME			MDS = ((Response - Bckgnd) ÷ Leak Value) = MDL				
5/5/04	[illegible]	24	24	2	61	24	6.33^{-9}	3.42^{-10}
							___ XE -	___ XE —

A Gould
Inspector

2/7/06
Date

3.5 Prepare the outside of the Vacuum Vessel (ME-390133) for painting. Clean using Ethyl Alcohol (Fermi stock 1920-0550) and Kimwipes (Fermi stock 1660-2500) or equivalent.

O. Friary — Technician(s) — Date 2/6/06

3.6 Mask the Stainless Steel Components of the Vacuum Vessel for painting.

O. Friary — Technician(s) — Date 2/6/06

3.7 Prime the Vacuum Vessel using Rust-o-leum (Fermi stock 1825-4000).

O. Friary — Technician(s) — Date 2/6/06

3.8 Verify that the Screws (MA-393036) will thread easily into the appropriate holes in the Vacuum Vessel (ME-390133). If necessary, tap out holes with M10 – 1.5 Tap. Move Vacuum Vessel (ME-390133) to Table.

A. Gould — Lead Person — Date 2/7/06

3.9 Verify that the Adjusting Screws (MA-393039 and MA-390878) will thread easily into the appropriate holes in the Vacuum Vessel (ME-390122).

A. Gould — Crew Chief — Date 2/7/06

3.10 Paint the Vacuum Vessel using Flambeau Red (Fermi stock 1825-3710).

O. Friary — Technician(s) — Date 2/7/06

4.0 Piping Assembly

Note(s):

Do not use a Strap Wrench on the Pipes.

4.1 Place the Cold Mass Assembly on the Insertion Rail System.

Technician(s) _____ Date 4-14-06

4.2 Clean the Pipe Supports with Ethyl Alcohol (Fermi stock 1920-0550) and Kimwipes (Fermi stock 1660-2500) or equivalent.

Technician(s) _____ Date 4-17-06

4.3 Install Cold Mass Insulation per Q3 Cold Mass Magnet Insulation Installation (ME-390527).

Technician(s) _____ Date 4-17-06

4.4 Install the Pipe Supports (MD-390092) (Qty. 3) on the Cold Mass per Q3 Cryostat Assembly Internal Piping (ME-390213).

Note(s):

A Tie Bar may be disconnected, if necessary, from the Fixed Support Assembly to install the central two pipe supports.

PIPE SUPPORT ASSEMBLY

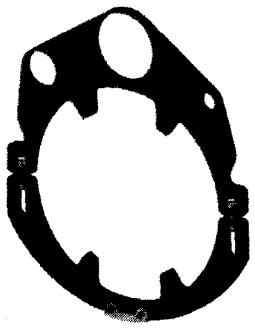

Technician(s) _____ Date 4-17-06

4.5 Using Pipe Supports (MD-390092) as a template, cut the blankets around the Pipe Support Feet and slit blankets circumferentially at the Pipe Supports.

Technician(s) _____ Date 4-17-06

4.6 Starting from the North Side of IP (or East) End of Magnet, mark the East End of the 1st blanket "1E" (1 East) and "1W" (1 West) as per Figure 4.6-A below. Label the next blanket in this fashion, incrementing the numerical value for each blanket as per Figure 4.6-A. When all blankets are installed on Cold Mass, blanket designations should be placed near the "Top" of the North side of the magnet as per Figure 4.6-A. (This step will be referenced in step 5.9)

INSTALLING / UNINSTALLING BLANKETS

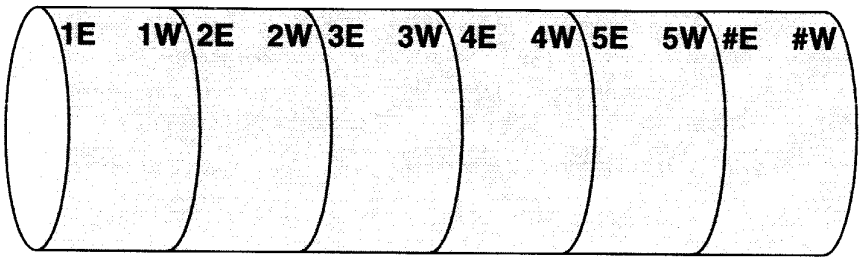

IP END **NON-IP END**

(View from "North" End of Magnet looking "South")

Figure 4.6-A

Technician(s) _____ Date 4-17-06

4.7 Remove Pipe Supports (MD-390092) and blankets. Wrap blankets in plastic bag to keep clean for later use. Label blankets as they are removed for later positioning.

Technician(s) _____ Date 4-17-06

4.8 Install Pipe Supports (MD-390092) to same locations as in step 4.4.

Technician(s) _____ Date 4-19-06

4.9 Clean the Cold Mass and the Retainer Clips (MA-390103) with Ethyl Alcohol (Fermi stock 1920-0550) and Kimwipes (Fermi stock 1660-2500) or equivalent.

Technician(s) _____ Date 4/19/06

4.10 Weld the Retainer Clips (MA-390103) to the Cold Mass Outer Shell as per the Q3 Cryostat Internal Piping Assembly (ME-390213).

William E Yaffuso — 4-19-06
Weldor(s) — Date

4.11 Install the Threaded Rods (Tie Rod Assembly) (MC-390638). See copy of step 19.9 (Q3 Module Assembly Traveler, TR-333729) in designated book, for the distance between the Suspension Rings. Record the previously recorded measurements below.

Non-IP North to IP North 4152

Non-IP South to IP South 4151

C. Fria — 4/20/06
Technician(s) — Date

4.12 Install Tie Bar Retaining Clamp (MB-390136) as per Q3 Cryostat Internal Piping Assembly (ME-390213).

C. Fria — 4/20/06
Technician(s) — Date

4.13 Clean the Q3 Heat Exchanger Outer Shell (MD-390385), Q3 Pumping Line (MB-390224) and the Q3 Cool Down Line (MB-390225) with Ethyl Alcohol (Fermi stock 1920-0550) and Kimwipes (Fermi stock 1660-2500) or equivalent.

J.K.C — 4/20/06
Technician(s) — Date

4.14 Clean the Pumping Line End Flange (MB-390032), the Cool Down Line End Flange (MB-390033) and the Heat Exchanger Corrugated Tube Flange (MB-390030) with Ethyl Alcohol (Fermi stock 1920-0550) and Kimwipes (Fermi stock 1660-2500) or equivalent.

Technician(s) _____ Date 4/20/06

4.15 Slide the Heat Exchanger Outer Shell (ME-390215) through all three supports and both Suspension Rings.

Note(s):

Ensure the cross over hole in the Heat Exchanger Pipe is lined up with the elbow on the End Dome.

Technician(s) _____ Date 4-20-06

4.16 Position the Q3 Pipe Anchor (MC-390486).

Technician(s) _____ Date 4-20-06

4.17 Position the Heat Exchanger Weld Connector Adapter (MC-390278).

Technician(s) _____ Date 4-20-06

4.18 Position the Heat Exchanger Outer Shell Pipe (ME-390215).

Technician(s) _____ Date 4-20-06

4.19 Clean the Non-IP End of the Heat Exchanger Corrugated Tube (MC-390217) and the Non-IP End Inner Tube Adapter (MC-390658).

X Technician(s) _____ Date 2/22/06

4.20 Weld the Non-IP End Inner Tube Adapter (MC-390658) to the Heat Exchanger Corrugated Tube (MC-390217) per Q3 Heat Exchanger Corrugated Tube Weldment (ME-390395).

Weldor(s) _____ Date 2/22/06

4.21 Perform a Leak Check on the Non-IP End Inner Tube Adapter (MC-390658) and the Heat Exchanger Corrugated Tube (MC-390217)

Part No. Reg' Hebo assem.	DETERMINATION OF DETECTABLE LEAK						
	M.D.S. ÷ ((Response – Background) ÷ Leak value) = MDL						
OPERATOR'S LAST NAME	SCALE UNITS BEFORE HELIUM PROBE	SCALE UNITS WHILE ENCLOSURE FLOODING	MDS	Response	Background	Leak Value	MDL
Wilson	38X1	38X1	2	68X5	38X1	3.9 xE-8	2.58 xE-10

Inspector: [signature] Date: 2/22/06

4.22 Assemble the Q3 Heat Exchanger Corrugated Tube Assembly (ME-390216).

Technician(s): [signature] Date: 4-20-06

4.23 Insert the Q3 Heat Exchanger Corrugated Tube Assembly (ME-390216).

Technician(s): [signature] Date: 4-20-06

4.24 Position Q3 Heat Exchanger Corrugated Tube Assembly (ME-390216).

Technician(s): [signature] Date: 4-20-06

4.25 Position the Heat Exchanger Flat End Cap (MD-390178).

Technician(s): [signature] Date: 4-20-06

4.26 Purge the Assembly using Argon (Ar) gas.

Technician(s): O. Friar Date: 4·20·06

4.27 Tack weld the Heat Exchanger Weld Connector Adapter (MC-390278) to the Heat Exchanger Outer Shell (ME-390215).

Note(s):

DO NOT WELD THE HEAT EXCHANGER INNER TUBE TO THE END CAP!!!

Weldor(s): [signature] Date: 4/20/06

4.28 Tack weld the Heat Exchanger Weld Connector Adapter (MC-390278) to the IP End Dome 90° Elbow (MC-390220 of Non-IP End Dome Weldment MD-390219).

Note(s):
DO NOT WELD THE HEAT EXCHANGER INNER TUBE TO THE END CAP!!!

Weldor(s) _____ Date 4/20/06

4.29 Tack weld the Heat Exchanger Flat End Cap (MD-390178) to the Outer Shell Weldment (MD-390385)

Note(s):
DO NOT WELD THE HEAT EXCHANGER INNER TUBE TO THE END CAP!!!

Weldor(s) _____ Date 4/20/06

4.30 Weld the Heat Exchanger Outer Shell Pipe (ME-390215) to the Heat Exchanger Weld Connector Adapter (MC-390278) as per Q3 Cryostat Assembly Internal Piping (ME-390213).

Weldor(s) _____ Date 4/20/06

4.31 Weld the IP End Dome 90° Elbow (MC-390220 of Non-IP End Dome Weldment MD-390219) to the Heat Exchanger Weld Connector Adapter (MC-390278) as per Q3 Cryostat Assembly Internal Piping (ME-390213).

Weldor(s) _____ Date 4/20/06

4.32 Weld the Heat Exchanger Flat End Cap (MD-390178) to the Outer Shell Pipe (MD-390215) as per Q3 Heat Exchanger Outer Shell Weldment (ME-390385).

Weldor(s) _____ Date 4/20/06

4.33 Ensure the Pipe Anchor is in the correct position per Q3 Cryostat Assembly Internal Piping (ME-390213).

Crew Chief _____ Date 4-20-06

4.34 Weld the Q3 Pipe Anchor (MC-390486) to the Cold Mass Assembly (ME-390528) as per Q3 Cryostat Assembly Internal Piping (ME-390213).

Weldor(s) _____ Date 4/20/06

4.35 Weld the Heat Exchanger Outer Shell Pipe (MD-390215) to the Pipe Anchor (MC-390486).

Weldor(s) _____ Date 4/20/06

4.36 Determine the length of the Heat Exchanger Outer Shell Extension Spool (MD-390659). (Contact Responsible Authority for details, if necessary).

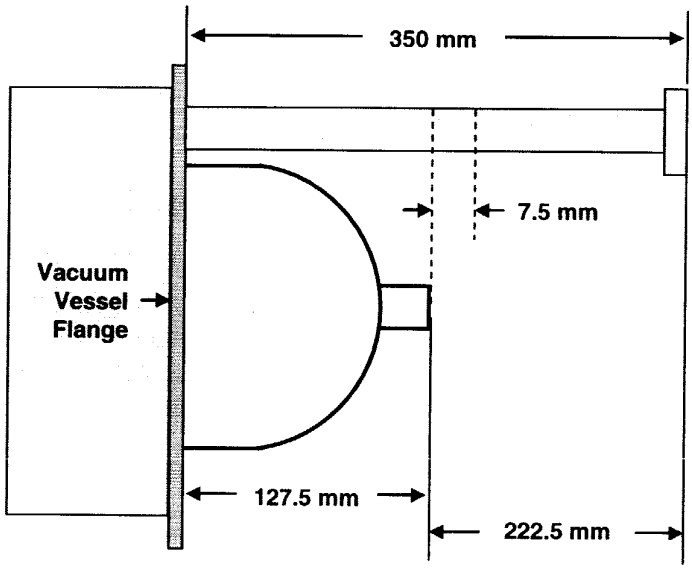

Q3 Heat Exchanger (Hx)
Outer Shell Measurement

4.36.1 Position the Heat Exchanger Spool and Weld Rings in place.

4.36.2 Hold Spool in place and measure from the beam tube flange to the Heat Exchanger Spool Flange. This operation requires at least two (2) technicians.

Record measurement here: 235

4.36.3 Subtract 222.5 from the above measurement. This is the amount to shorten the spool.

Above measurement: 235

Subtract: - 222.5

Shorten Spool by: 12 5

4.36.4 Mark up drawing and give to machine shop or equivalent to shorten spool.

Technician(s) — Date: 4-20-06

STOP

Responsible Authority/Physicist — Date: 4/20/06

4.37 Position Heat Exchanger Outer Shell Extension Spool (MD-390659).

Technician(s) _____ Date 4-21-06

4.38 Weld the Heat Exchanger Outer Shell Extension Spool (MD-390659).

Weldor(s) _____ Date 4/21/06

4.39 Position the Q3 Heat Exchanger Corrugated Tube Assembly (ME-390216) per Q3 Heat Exchanger Assembly (ME-390214).

Technician(s) _____ Date 4-21-06

4.40 Verify that the Q3 Heat Exchanger Corrugated Tube Assembly (ME-390216) is perpendicular to the Outer Shell Weldment (ME-390385) as per Q3 Heat Exchanger Assembly (ME-390214).

Crew Chief _____ Date 4-21-06

4.41 Weld the Q3 Heat Exchanger Corrugated Tube Assembly (ME-390216) to the Outer Shell Weldment (ME-390385) as per Q3 Heat Exchanger Assembly (ME-390214).

Weldor(s) _____ Date 4/21/06

4.42 Weld the Heat Exchanger Corrugated Tube Flange (MB-390030) to the Heat Exchanger Outer Shell (ME-390385) as per Q3 Heat Exchanger Assembly (ME-390214).

Weldor(s) _____ Date 4/21/06

4.43 Insert the Cooldown Line Tube (MC-390225).

Technician(s) _____ Date 4-21-06

4.44 Insert the Pumping Line Tube (MB-390224).

Technician(s) _____ Date 4-21-06

4.45 Weld the Cooldown Line End Flange (MB-390033) to the IP End of the Q3 Cool Down Line (MB-390255) as per Q3 Cryostat Internal Piping Assembly (ME-390213).

Weldor(s) _____ Date 4/22/06

4.46 Weld the Pumping Line Flange (MC-390032) to the IP End of the Pumping Line Tube (MB-390224) per Q3 Cryostat Internal Piping Assembly (ME-390213).

Weldor(s) _____ Date 4/22/06

4.47 Position the Cooldown Line Non-IP End Extension Spool (ME-390663).

Technician(s) _____ Date 4-22-06

4.48 Position the Pumping Line Non-IP End Extension Spool (ME-390650).

Technician(s) _____ Date 4-22-06

4.49 Weld the Cooldown Line Non-IP End Extension Spool (ME-390663) to the Cooldown Line Tube (MB-390225) per Q3 Cryostat Internal Piping Assembly (ME-390213).

Weldor(s) _____ Date 4/22/06

4.50 Weld the Pumping Line Non-IP End Extension Spool (ME-390650) to the Pumping Line Tube (MB-390224) per Q3 Cryostat Internal Piping Assembly (ME-390213).

Weldor(s) _____ Date 4/22/06

4.51 Position the Cooldown Line Tube (MB-390225) and the Pumping Line Tube (MB-390224) per Q3 Cryostat Internal Piping Assembly (ME-390213).

Technician(s) _____ Date 4-22-06

4.52 Purge the Cooldown Line Tube (MB-390225) and the Pumping Line Tube (MB-390224) and the Cold Mass with Argon Gas (Ar).

Inspector _____ Date 4-22-06

4.53 Weld the Cool Down Line (MC-390225) and the Pumping Line Tube (MB-390224) to the Q3 Pipe Anchor (MC-390486) as per Q3 Cryostat Assembly Internal Piping (ME-390213).

Weldor(s) _____ Date 4/22/06

4.54 Insert Q3 4.5k Intercept Line Tubes (MB-390226) as per Q3 Heat Exchanger Assembly (ME-390214).

Technician(s) _____ Date 4.24-06

4.55 Purge the Q3 4.5k Intercept Line Tubes (MB-390226).

Technician(s) _____ Date 4-24-06

4.56 Weld the 4.5k Intercept Line Non-IP End Extension Weldments (ME-390679) to the 4.5k Intercept Line Tubes (MB-390226) as per Q3 Cryostat Assembly Internal Piping (ME-390213).

Weldor(s) _____ Date 4/24/06

4.57 Ensuring that the Q3 4.5k Intercept Line Pipes (MB-390226) have been purged, weld the Intercept Line Pipe Stops (MA-390379) as per Q3 Cryostat Assembly Internal Piping (ME-390213).

Weldor(s) _____ Date 4/24/06

4.58 Mark and position the 4.5k Intercept Tube Brace Bar (MB-390816) for welding as per Q3 Cryostat Assembly Internal Piping (ME-390213).

Technician(s) _____ Date 4-24-06

4.59 Weld the 4.5k Intercept Tube Brace Bar (MB-390816) as per Q3 Cryostat Assembly Internal Piping (ME-390213).

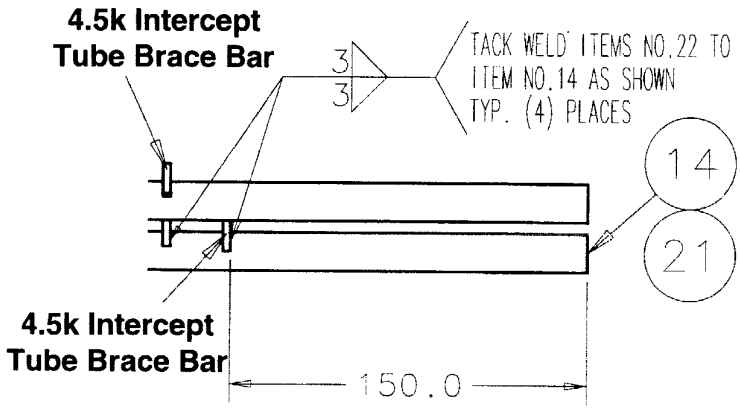

TYP. 4.5K INTERCEPT BRACE DETAIL

TYP. BOTH ENDS
SCALE: 1:2

Weldor(s) _____ Date 4-24-06

4.60 Mark the Fiducial Mounting Blocks (MB-390808) per Q3 Cold Mass Welded Assembly (ME-390529).

Technician(s) _____ Date 4/25/06

4.61 Weld the Fiducial Mounting Blocks (MB-390808) per Q3 Cold Mass Welded Assembly (ME-390529).

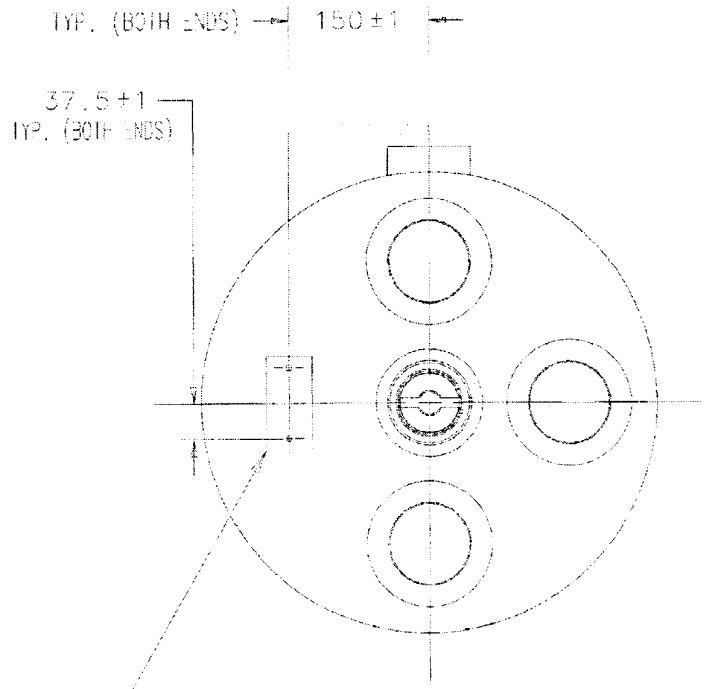

23 **FIDUCIAL MOUNTING BLOCK**

DOB

Welder(s) _____ Date _____

4/25/06

4.62 Prepare the Power Leads and corrector bus to be cut by measuring and marking the appropriate cutoff location as per Q3 Module Assembly (ME-369900). Remove any Kapton insulation from the end of the lead to approximately 4 inches beyond the cutoff mark. Clamp the Leads, individually, using the "Lead Clamp Block Tooling".

Technician(s) _____ Date 4-27-06

4.63 Verify the mark has been placed at the appropriate cutoff location as per Q3 Module Assembly (ME-369900).

STOP

Responsible Authority/Physicist _____ Date 4/27/06

STOP

4.64 **IN THE PRESENCE OF THE RESPONSIBLE AUTHORITY**, cut the Power Leads and the corrector bus at the appropriate cutoff location (mark) as per Q3 Module Assembly (ME-369900).

Technician(s) _____ Date 4-27-06

STOP

Responsible Authority/Physicist _____ Date 4/27/06

4.65 Fuse the Ends of the Leads.

Weldor(s) _____ Date 4/27/06

4.66 Remove Clamps when fusing is complete and it is safe to do so.

Technician(s) _____ Date 4-27-06

4.67 Prepare Cold Mass Assembly for Pressure Test at 363 psi.

Technician(s) _____ Date 4-27-06

STOP

4.68 Verify Cold Mass Assembly is ready for Pressure Test at 363 psi.

Responsible Authority/Physicist _____ Date 4/27/06

STOP

4.69 Perform a Pressure Test of the Cold Mass Assembly at 363 psi Nitrogen per Section 5034 of the Fermilab ES&H Manual and UG-100 of the Code.

Warning:

The test is to be performed after normal working hours and only personnel directly involved with the test will be present.

Responsible Authority/Physicist _____ Date 4/27/06

4.70 Leak Check the Cold Mass Assembly. (This will include the Outer Shell (MD-390385)).

Part No.	DETERMINATION OF DETECTABLE LEAK						
_____	M.D.S. ÷ ((Response – Background) ÷ Leak value) = MDL						
OPERATOR'S LAST NAME	SCALE UNITS BEFORE HELIUM PROBE	SCALE UNITS WHILE ENCLOSURE FLOODING	MDS	Response	Background	Leak Value	MDL
GAW	18X1	18X1	2	34X5	18X1	2.85 xE-8	3.4 xE-10

Inspector _____ Date 5-4-2006

4.71 Leak check the three Q3 4.5k Intercept Lines (MB-390226).

Q3 IP END VIEW

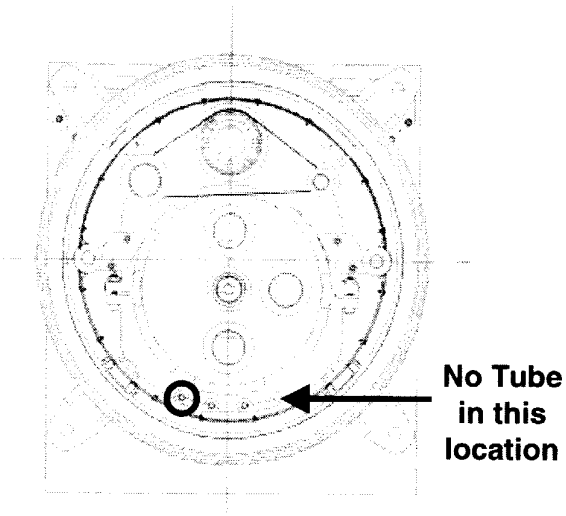

4.5k Intercept Line - #1

Part No.	DETERMINATION OF DETECTABLE LEAK						
_____	M.D.S. ÷ ((Response – Background) ÷ Leak value) = MDL						
OPERATOR'S LAST NAME	SCALE UNITS BEFORE HELIUM PROBE	SCALE UNITS WHILE ENCLOSURE FLOODING	MDS	Response	Background	Leak Value	MDL
GDW	44X1	44X1	2	42X5	44X1	2.85 xE-8	3.4 xE-10

Q3 IP END VIEW

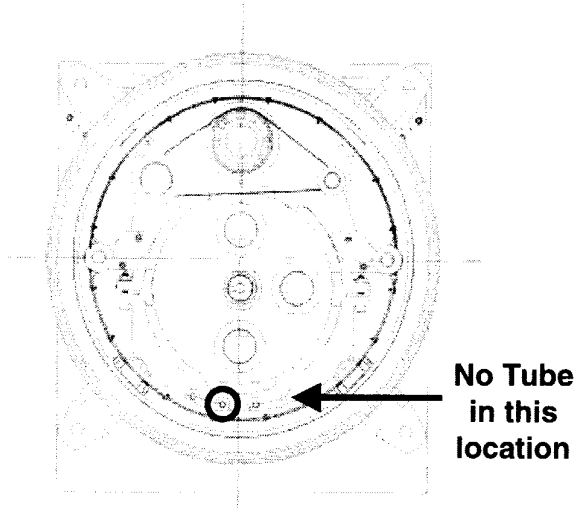

4.5k Intercept Line - #2

Part No.	DETERMINATION OF DETECTABLE LEAK						
	M.D.S. ÷ ((Response – Background) ÷ Leak value) = MDL						
OPERATOR'S LAST NAME	SCALE UNITS BEFORE HELIUM PROBE	SCALE UNITS WHILE ENCLOSURE FLOODING	MDS	Response	Background	Leak Value	MDL
G. Dec	42x1	42x1	2	42x5	42x1	2.85 x E-8	3.4 x E-10

Q3 IP END VIEW

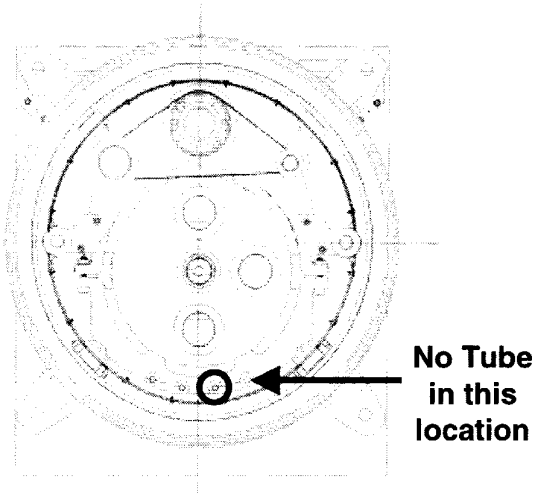

4.5k Intercept Line - #3

Part No.	DETERMINATION OF DETECTABLE LEAK						
	M.D.S. ÷ ((Response – Background) ÷ Leak value) = MDL						
OPERATOR'S LAST NAME	SCALE UNITS BEFORE HELIUM PROBE	SCALE UNITS WHILE ENCLOSURE FLOODING	MDS	Response	Background	Leak Value	MDL
G Duo	52X1	52X1	2	46X5	52X1	2.85 xE-8	3.2 xE-10

D. Gdu
Inspector

5-4-2006
Date

4.72 Leak Check the Cooldown Line (MD-390225).

Q3 IP END VIEW

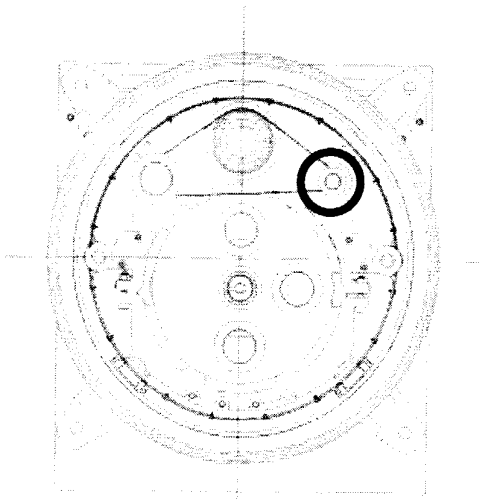

Cooldown Line (MD-390225)

Part No.	DETERMINATION OF DETECTABLE LEAK						
_____	M.D.S. ÷ ((Response – Background) ÷ Leak value) = MDL						
OPERATOR'S LAST NAME	SCALE UNITS BEFORE HELIUM PROBE	SCALE UNITS WHILE ENCLOSURE FLOODING	MDS	Response	Background	Leak Value	MDL
GDW	60X1	60X1	2	44X5	60X1	2.85 xE-8	3.5 xE-10

D. Gdw
Technician(s)

5-4-2006
Date

4.73 Leak Check the Pumping Line (MB-390224).

Q3 IP END VIEW

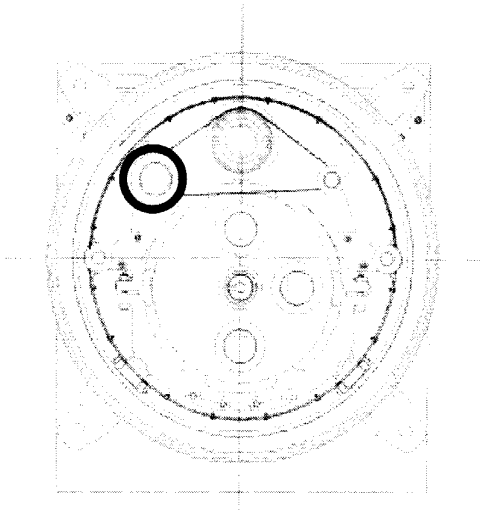

Pumping Line (MB-390224)

Part No.	DETERMINATION OF DETECTABLE LEAK						
_____	M.D.S. ÷ ((Response – Background) ÷ Leak value) = MDL						
OPERATOR'S LAST NAME	SCALE UNITS BEFORE HELIUM PROBE	SCALE UNITS WHILE ENCLOSURE FLOODING	MDS	Response	Background	Leak Value	MDL
GDW	6821	6841	2	40 X 5	6841	2.85 xE-8	4.3 xE-10

D. Gdw
Technician(s)

5-4-2006
Date

5.0 Shield Assembly

5.1 Install the Cold Mass Insulation Mounting Lug Blankets (MC-390496).

Technician(s) _____ Date 5-5-06

5.2 Lift the Cold Mass Assembly and place the (IP End) Q3 End Section (ME-390439) and (Non-IP End) Q3 End Section (ME-390439) on the Insertion Rails. Lower the Cold Mass back onto the rails ensuring the holes in the Shield Sections line up with Support Rollers.

Technician(s) _____ Date 5-5-06

5.3 Insert the Mid Section (ME-390435) and the Support Bands (MD-390083).

Technician(s) _____ Date 5-5-06

5.4 Assemble the bottom half of the shield. Leave all bolts loose. Spray all screw threads with Molybdenum.

Technician(s) _____ Date 5-5-06

5.5 Assemble the Cooling Tubes (MD-390437) to the Bottom Half of the Shield, leaving all screws loose.

Technician(s) _____ Date 5-5-06

5.6 Tighten all screws on Bottom Half of the Shield. (Screws on Bottom Half of Shield will be inaccessible after blankets are installed.)

Technician(s) _____ Date 5-5-06

5.7 Lift the Cold Mass and place the Shield Inner and Outer MLI Blankets (ME-390489 & ME-390490) onto the Insertion Rails in the correct orientation.

Note(s):

Place the Outer Blanket (ME-390490) on the Rails first.

Technician(s) _____ Date 5-5-06

5.8 Lower the Cold Mass onto the rails. Ensure the slits in the blankets line up with Support Rollers.

Technician(s) _____ Date 5-5-06

5.9 Install the Cold Mass MLI Blankets per (ME-390527) and in the same position as Step 4.6.

INSTALLING / UNINSTALLING BLANKETS

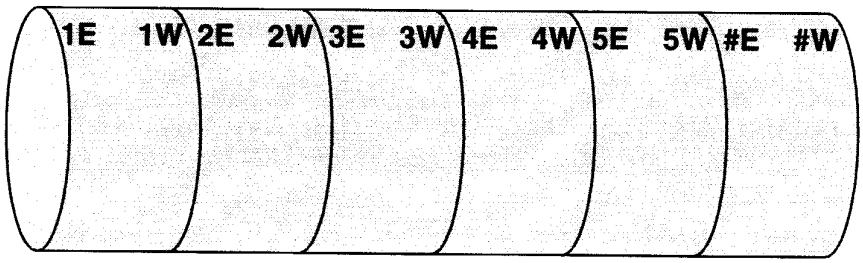

IP END **NON-IP END**

(View from "North" End of Magnet looking "South")

Technician(s) _____ Date 5-6-06

5.10 Cut and install the pipe MLI blankets per Q3 Piping Assembly Insulation Installation (ME-390545).

Technician(s) _____ Date 5-6-06

5.11 Install the IP & NON IP End Shields per Q3 Thermal Shield Assembly (ME-390436). Spray all screw threads with Molybdenum. Ensure the shield is not sagging prior to the final tightening of the shield screws.

Technician(s) _____ Date 5-6-06

5.12 Install the Q3 Center Section (Shield) (ME-390435). Leave all screws loose.

Technician(s) _____ Date 5-6-06

5.13 Tighten all Shield Screws (MA-393028).

Technician(s) _____ Date 5-6-06

5.14 Tie Kevlar string around blankets on each side of Suspension Ring Wheels at all locations.

Technician(s) _____ Date 5/6/06

5.15 Install the Shield Blankets (ME-390489 & ME-390490).

Technician(s) _____ Date 5-6-06

5.16 Weld the Non IP Extension Spools (ME-390652, part of ME-390437) per Q3 Thermal Shield Cooling Tube Weldment (ME-390437).

Weldor(s) _____ Date 5/10/06

5.17 Perform a Leak Check on the Q3 Thermal Shield Cooling Tube Weldment (ME-390437)

Part No. _____	DETERMINATION OF DETECTABLE LEAK						
	M.D.S. ÷ ((Response – Background) ÷ Leak value) = MDL						
OPERATOR'S LAST NAME	SCALE UNITS BEFORE HELIUM PROBE	SCALE UNITS WHILE ENCLOSURE FLOODING	MDS	Response	Background	Leak Value	MDL
SZAL	20x1	20x1	2	80x5	20x1	3.91 x E-8	2.31 x E-10

Part No. _____	DETERMINATION OF DETECTABLE LEAK						
	M.D.S. ÷ ((Response – Background) ÷ Leak value) = MDL						
OPERATOR'S LAST NAME	SCALE UNITS BEFORE HELIUM PROBE	SCALE UNITS WHILE ENCLOSURE FLOODING	MDS	Response	Background	Leak Value	MDL
SZAL	20x1	20x1	2	80x5	20x1	3.91 x E-8	2.31 x E-10

Technician(s) _____ Date 5-10-06

6.0 Cold Mass Insertion into the Vacuum Vessel

6.1 Install Pig Steel Repair Putty, or equivalent, between the Vacuum Vessel and the Insertion Rails.

Technician(s) _____ Date 5-6-06

6.2 Install the Cold Mass Pull-in Tooling.

Technician(s) _____ Date 5.6.06

6.3 Mount the Pneumatic Winch to floor on the West side of the Vacuum Vessel.

Technician(s) _____ Date 5.6.06

6.4 Connect the cable to the Pull-in Tooling.

Technician(s) _____ Date 5.6.06

6.5 Pull the Cold Mass Assembly into the Vacuum Vessel.

Technician(s) _____ Date 5-7-06

6.6 When the Cold Mass is fully inserted, install the "Top" Suspension System Adjusting Screws (MB-390039) and the "Bottom" (C936 Bearing Bronze) Suspension System Adjusting Screws (MB-390878).

[redacted]

Technician(s) _____ Date 5.7.06

6.7 Using Lower Suspension System Adjusting Screws, raise Cold Mass two (2) full turns.

O. Friary — Technician(s) 5.7.06 — Date

6.8 Ensure Cold Mass has been adjusted in the Vacuum Vessel and that all eight (8) Adjusting Screw Holes are aligned with threaded holes of Suspension System.

Crew Chief 5-9-06 — Date

6.9 Install Target Holders (Right, MD-390539), (Left, MD-390540) and (MD-390211) as per Q3 Cryostat General Assembly (ME-390132).

O. Friary — Technician(s) 5.9.06 — Date

6.10 Install Reference Socket Cup (MA-390426) as per Q3 Cryostat General Assembly (ME-390132).

O. Friary — Technician(s) 5.9.06 — Date

6.11 Install the Support Bracket Assemblies (Qty. 4) (MD-390783) as per Q3 Thermal Shield Assembly (ME-390436).

O. Friary — Technician(s) 5.9.06 — Date

7.0 Final Electrical Inspection

7.1 Perform an electrical inspection on each of the Individual Quadrants and the Cold Mass. Refer to the Valhalla and Leader Free Standing Coil Measurement Procedure (ES-292306).

To measure the Resistance of a Q3 Cold Mass:

1. Use Valhalla Scientific 4300B digital micro-ohmmeter.
2. Set Test Current to 0.1 amp.
3. Set Scale to 2V full scale.
4. Turn temperature compensation on.
5. Turn test current off.
6. Connect I_{HI} to Q4 inner power lead as shown in figure.
7. Connect I_{LO} to Q3 inner power lead as shown in figure.
8. Turn test current on.
9. Connect V_{HI} and V_{LO} to voltage taps as shown in resistance table.
10. To measure Total with leads, connect V_{HI} to Q4 power lead and V_{LO} to Q3 power lead.
11. Read resistance and record in traveler.

(Q3) Resistance				Nominal 3.35 to 3.45 Ω
				Total Resistance
Connect	Fermi	CERN	KEK	
V_{HI}	VTa1Q3	EE1113	a1	3.435 Ω
V_{LO}	VTc1Q3	EE1213	c1	
V_{HI}	VTc1Q3	EE1213	c1	3.435 Ω
V_{LO}	VTb1Q3	EE1313	b1	

				Total Resistance with Leads
				Nominal 6.75 to 6.85 Ω
V_{HI}	VTa1Q3	EE1113	a1	6.870 Ω
V_{LO}	VTb1Q3	EE1313	b1	
V_{HI}	Q4 Power Lead			6.888 Ω
V_{LO}	Q3 Power Lead			

Technician(s) _____ Date 5-9-06

Check resistance of Redundant Voltage Taps.

Q3 Redundant Voltage Taps				Nominal 3.35 to 3.45 Ω
Connect	Fermi	CERN	KEK	Resistance
V_{HI}	VTa2Q3	EE1123	a2	3.435 Ω
V_{LO}	VTc2Q3	EE1223	c2	
V_{HI}	VTc2Q3	EE1223	c2	3.435 Ω
V_{LO}	VTb2Q3	EE1323	b2	

Technician(s) _____ Date 5-9-06

To measure Ls and Q of a Q3 Cold Mass:

1. Use Agilent 4263B LCR Meter.
2. Turn power on by pushing line button. Wait 30 seconds until display screen is lit.
3. Recall program #1. To do this, push recall (Rcl), then push #1, then push Enter.
4. Push Auto/Hold button to release hold.
5. Verify that the frequency displayed in the upper right corner of the display screen is 1000 Hz and the level recorded in the lower right corner of the display screen is 1V or 1000 mV.
6. Connect H_{cur} to Quadrant 4 power lead as shown in figure.
7. Connect L_{cur} to Quadrant 3 power lead as shown in figure.
8. Connect H_{pot} and L_{pot} buttons to voltage taps as shown below.

To measure Q3:

- To measure Quadrants 1&4, connect H_{pot} to VTa1 (EE1113 for Q3), and L_{pot} to VTc1 (EE1213 for Q3).
- To measure Quadrants 2&3, connect H_{pot} to VTc1 (EE1213 for Q3), and L_{pot} to VTb1 (EE1313 for Q3).
- To measure total, connect H_{pot} to VTa1 (EE1113 for Q3), and L_{pot} to VTb1 (EE1313 for Q3).

9. Read Ls and Q from display and record in traveler.

(Q3) Inductance				Nominal 15 to 16 mH
				Total Inductance
Connect	Fermi	CERN	KEK	
H_{POT}	VTa1Q3	EE1113	a1	15.281 mH
L_{POT}	VTc1Q3	EE1213	c1	
H_{POT}	VTc1Q3	EE1213	c1	15.260 mH
L_{POT}	VTb1Q3	EE1313	b1	

				Nominal 30 to 32 mH
				Total Inductance
H_{POT}	VTa1Q3	EE1113	a1	30.476 mH
L_{POT}	VTb1Q3	EE1313	b1	

(Q3) Q-Factor				Nominal 1.0 to 1.2
				Total Q
Connect	Fermi	CERN	KEK	
H_{POT}	VTa1Q3	EE1113	a1	1.1
L_{POT}	VTc1Q3	EE1213	c1	
H_{POT}	VTc1Q3	EE1213	c1	1.1
L_{POT}	VTb1Q3	EE1313	b1	

				Nominal 1.0 to 1.2
				Total Inductance
H_{POT}	VTa1Q3	EE1113	a1	1.1
L_{POT}	VTb1Q3	EE1313	b1	

Technician(s)

5-9-06
Date

To measure the resistance of a Thermometer (RTD):

1. Use Hewlett Packard HP3457A digital multimeter.
2. Record temperature of building within +/- 5 degrees.
3. Press line button to turn line on.
4. Connect wires as shown in Figure below.
   U+ (Black) to Sense HI
   I+ (Yellow) to Input HI
   U- (Red) to Sense LO
   I- (Green) to Input LO
5. Push blue button (function key) once.
6. Push OHMF button.
7. Verify arrow in readout is above the 4WΩ (meaning a 4 wire resistance measurement).
8. Read resistance in ohms and record in traveler.

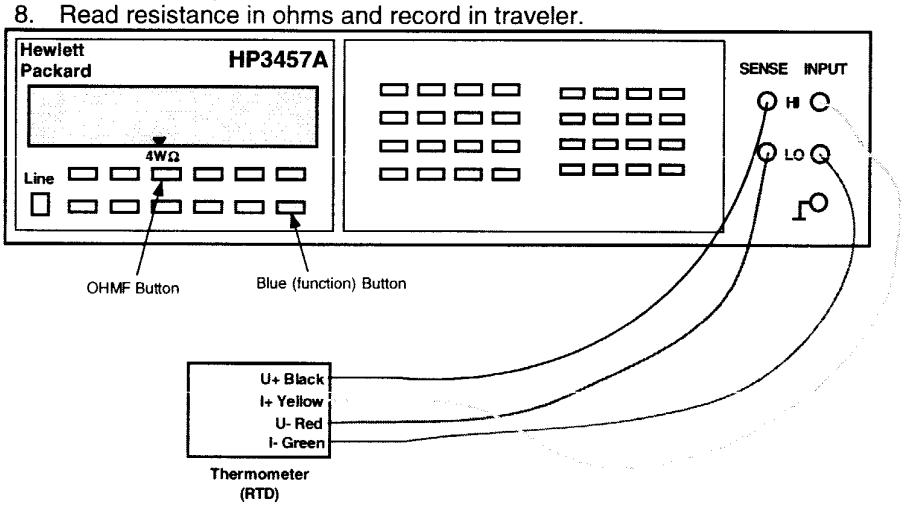

To measure the resistance of a Cryogenic (Warm-up) Heater

1. Use Hewlett Packard HP3457A digital multimeter.
2. Record temperature of building within +/- 5 degrees.
3. Press line button to turn line on.
4. Connect wires as shown in Figure below.
5. Push blue button (function key) once.
6. Push OHMF button.
7. Verify arrow in readout is above the 4WΩ (meaning a 4 wire resistance measurement).
   Note: Although this is technically a 4 wire measurement, it is effectively a 2 wire measurement, since there are only 2 wires connected to each heater.
8. Read resistance in ohms and record in traveler.

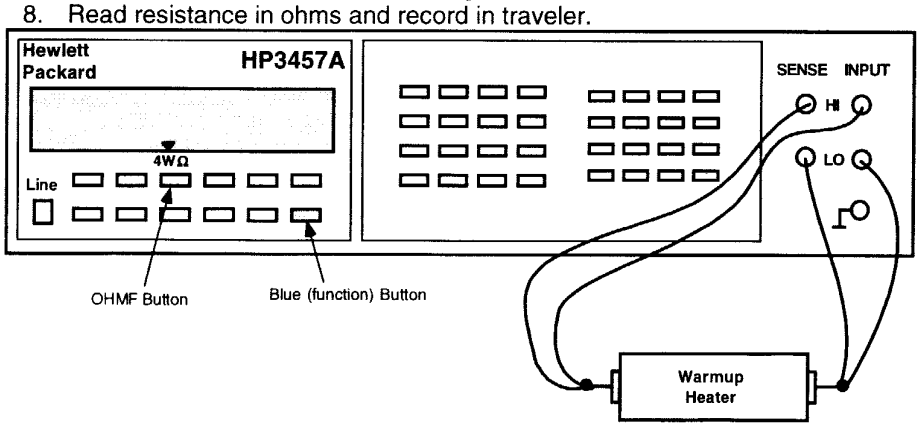

Q3 - RTD's and Cryogenic (warm-up) Heaters					
Temperature of Building (± 5°): 70					
Component	**Fermi**	**CERN**	**Range**	**Resistance**	**MFR Resistance (Expedition)**
Q3 RTD, primary	TaQ3	TT8313	**60 to 70Ω**	60.24 Ω	Ω
Q3 RTD, redundant	TbQ3	TT8323	**60 to 70Ω**	59.94 Ω	Ω
Q3 Cryogenic (warm-up) Heater (LE) - wire at top (CERN #1 I+)	W1aQ3	EH8313+	**16 to 18.5Ω**	17.73 Ω	
Q3 Cryogenic (warm-up) Heater (LE) - wire at bottom (CERN #1 I-)	W2aQ3	EH8313-			
Q3 Cryogenic (warm-up) Heater (Non-LE) - wire at top (CERN #2 I+)	W1bQ3	EH8323+	**16 to 18.5Ω**	17.33 Ω	
Q3 Cryogenic (warm-up) Heater (Non-LE) - wire at bottom (CERN #2 I-)	W2bQ3	EH8323-			

O. Friang
Technician(s)

OF 5.9.06
Date

Using the Hewlett Packard HP3457A digital multimeter, measure the Protection (Strip) Heater Resistance for Q3.

Q3 Protection (Strip) Heater Resistance					
Fermi	**CERN**	**KEK**	**Description**	**Limit**	**Resistance**
H1aQ3	**YT1113+**	**HA1**	**Circuit A**	**28 to 32 Ω**	31.65 Ω
H2aQ3	**YT1113-**	**HA2**			
H1bQ3	**YT1123+**	**HB1**	**Circuit B**	**28 to 32 Ω**	30.02 Ω
H2bQ3	**YT1123-**	**HB2**			

O. Friang
Technician(s)

5.9.06
Date

7.2 Using the Valhalla 4300B, connect 10mA applied voltage thru the corrector Power Leads. Measure Resistance and record in the table below.

Corrector Bus Leads

	V3A	V3B	H3A	H3B	B3A	B3B	B6A	B6B	
	V2A	V2B	H2A	H2B	B4A	B4B	A4A	A4B	
	V1A	V1B	H1A	H1B	A2A	A2B	A3A	A3B	

(View Looking from DFBX into Q3)

Corrector Element	Readout Labels		Power Labels		Resistance	Nominal Resistance
			I_{HI}	I_{LO}		
MQSX	A2A	EE8223	A2A	A2B	.048	.057 to .063Ω
	EE8223	A2B			7.68	7.22 to 7.98Ω
	A2A	A2B			7.71	7.20 to 7.96Ω
MCBXV	V3A	EE8113	V3A	V3B	.004 .01	.010 to .025Ω
	EE8113	V3B			17.45	16.57 to 18.32Ω
	V3A	V3B			17.56	16.56 to 18.31Ω
MCBXH	H3A	EE8123	H3A	H3B	.01 ~~.038~~	.010 to .025Ω
	EE8123	H3B			21.54	20.35 to 22.50Ω
	H3A	H3B			21.52	20.35 to 22.50Ω
MCTX	B6A	EE8613	B6A	B6B	.01	.010 to .025Ω
	EE8613	B6B			98.87	93.45 to 103.29Ω
	B6A	B6B			98.81	93.33 to 103.15Ω
MCSX	B3A	EE8313	B3A	B3B	.01	.010 to .025Ω
	EE8313	B3B			28.9	26.47 to 29.26Ω
	B3A	B3B			27.90	26.45 to 29.23Ω
MCOSX	A4A	EE8423	A4A	A4B	.01	.009 to .011Ω
	EE8423	A4B			11.93	11.18 to 12.36Ω
	A4A	A4B			11.93	11.12 to 12.29Ω
MCOX	B4A	EE8413	B4A	B4B	.01	.010 to .025Ω
	EE8413	B4B			12.96	11.86 to 13.11Ω
	B4A	B4B			12.96	12.16 to 13.45Ω
MCSSX	A3A	EE8323	A3A	A3B	.01	.009 to .011Ω
	EE8323	A3B			13.49	11.59 to 13.81Ω
	A3A	A3B			13.49	12.66 to 14.00Ω

Technician(s) Date 5/9/06

8.0 Final Preparations

8.1 Perform a Final Stretched Wire measurement.

Responsible Authority/Physicist — Date: 8/28/06

8.2 Perform a Final Cryostat Pipe Survey measurement.

Ted Beale
Responsible Authority/Physicist — Date: 8/28/06

8.3 Install Conflat Flanges (MA-390374) w/ Copper Gaskets (MA-390375) and Bolt Set (MA-390376) to Cryostat as per Q3 Cryostat General Assembly (ME-390132).

Technician(s) — Date: 8-28-06

8.4 Perform a pressurized Helium Leak Check of the Cryostat Assembly.

Part No.	DETERMINATION OF DETECTABLE LEAK						
	M.D.S. ÷ ((Response – Background) ÷ Leak value) = MDL						
OPERATOR'S LAST NAME	SCALE UNITS BEFORE HELIUM PROBE	SCALE UNITS WHILE ENCLOSURE FLOODING	MDS	Response	Background	Leak Value	MDL
GAW	80X1	80X1	2	48X5	80X1	2.85 xE-8	3.6 xE-10

Inspector — Date: 8-31-2006

8.5 Ensure all Pipe Supports are in place.

Responsible Authority/Physicist — Date: 8/31/06

9.0 Production Complete

9.1 Process Engineering verify that the LHC Q3 Cryostat Assembly Traveler (5520-TR-333730) is accurate and complete. This shall include a review of all steps to ensure that all operations have been completed and signed off. Ensure that all Discrepancy Reports, Nonconformance Reports, Repair/Rework Forms, Deviation Index and dispositions have been reviewed by the Responsible Authority for conformance before being approved.

Comments:

Bob Johnson — Process Engineering/Designee

3/16/07 — Date

TD - Engineering Fabric _ion Component Kit List

Process Engineering

Component Serial No. LQXC09

Kit submitted by: Bob Jensen Ext 3173

Fermi ID No. 315

Date submitted: 23-Jan-06

Need date: 27-Jan-06

Deliver to: ICB

Use with Traveler No. 333730

Job No. 389

M&S task number: 300 1.1.1.3.4

Drawing Title: Q3 CRYOSTAT GENERAL ASSEMBLY

Drawing No. ME-390132 Rev. E

Material Control

Parts available

Verified by: M. Schmidt

Fermi ID No. 04223N

Date submitted to stockroom: 24-Jan-06

Parts issued

Issued by: [illegible]

Fermi ID No. 12648

Date issued: 1/31/06

Parts received by E&F: Bob Sage

Fermi ID No. 0315

Date received by E&F: 1/31/06

	Description	Dwg Size	Number	Rev	Unit	Quantity Required	Location	Quantity Issued	E&F Verified	Routing Form Number	Spares Number / Comment
1	ADJUSTING SCREW	MB	390039	C	EA	4	21A4	4	✓	83632	13 pcs.
2	VACUUM VESSEL ASSEMBLY RSMP	ME	390133	E		1	Site 38		✓		1 pc
3	TARGET HOLDER	MD	390211	B	EA	4	R10,1,1	2	✓	83845	8 pcs.
4	Blank Non-Rotatable Conflat Flange, 4.62" OD 304 SS	MA	390374	*	EA	8	R8,3,4	8	✓	78987	13 pcs.
5	COPPER GASKET	MA	390375	*	EA	8	22A2	8	✓	84007	25 pcs.
6	BOLT SET, HEX HEAD, 5/16 - 24 x 1.25 w/ WASHER	MA	390376	*	EA	80	22A3	65	✓	72306	67 pcs.
7	WASHER .656" ID x 1.38" OD x .13" THK, STN STEEL	MA	390377	*	EA	8	22A3	8	✓	77866	8 pcs.
8	REFERENCE SOCKET CUP (Furnished by CERN)	MA	390426	*	EA	8	R1,2,2	8	✓	77884	24 pcs.
9	VINYL FLANGE COVER FOR 75 MM FLANGE	MA	390491	*	EA	6	22A6	6	✓	78835	176 pcs.

TD - Engineering Fabric..on Component Kit List

	Description	Dwg Size	Number	Rev	Unit	Quantity Required	Location	Quantity Issued	E&F Verified	Routing Form Number	Spares Number / Comment
10	VINYL FLANGE COVER FOR 114 MM FLANGE	MA	390492	*	EA	4	22A7	4	✓	78836	165 pcs.
11	VINYL FLANGE COVER FOR 134 MM FLANGE	MA	390493	*	EA	7	22A7	7	✓	78837	208 pcs.
12	VINYL FLANGE COVER FOR 201 MM FLANGE	MA	390494	*	EA	1	22A8	1	✓	78834	69 pcs.
13	ALIGNMENT FIDUCIAL COVER	MA	390495	*	EA	8	22A8	8	✓	78957	106 pcs.
14	TARGET HOLDER, RIGHT	MD	390539	*	EA	2	R8,1,2	2	✓	79556	5 pcs.
15	TARGET HOLDER, LEFT	MD	390540	*	EA	2	R8,S1,L5	2	✓	79555	5 pcs.
16	FIDUCIAL MOUNTING BLOCK (On Q1 Welded Assembly ME-390526)	MB	390808	*	EA	2	R1,1,3	Ø			2 pcs.
17	ADJUSTING SCREW - VERSION 2 (BRONZE)	MC	390878	*	EA	4	R7,1,2	4	✓	83342	6 pcs.
18	M16-2 x 70.0 mm LG HEX SHCS, 18-8 STN STEEL	MA	393021	*	EA	8	22C4	8	✓	77840	50 pcs.
19	M6 FLAT WASHER, 18-8 STN STEEL	MA	393024	*	EA	32	22C5	32	✓	78891	56 pcs.
20	M10-1.5 x 25mm LG HEX SHCS 18-8 STN STEEL	MA	393036	*	EA	24	22D3	24	✓	77899	46 pcs.
21	M6-1.0 x 35mm LG HEX SHCS 18-8 STN STEEL	MA	393045	*	EA	16	22D5	16	✓	78886	54 pcs.
22	M8 x 30mm LG HEX SPRING PIN 18-8 STN STEEL	MA	393048	*	EA	8	22D7	8	✓	78837	20 pcs.
23	M10 LOCK WASHER, 18-8 STN STEEL	MA	393220	*	EA	24	23B5	24	✓	80024	176 pcs.
24	STD. SPRING PIN SLOTTED M4 x 20mm LG. PLAIN STEEL	MA	393360	E	EA	16	R2,2,3	16	✓	83975	102 pcs.
INSULATED SHIELD AND PIPING ASSEMBLY		ME	390212	A		1					
25	Q3 SHIELD MLI INNER BLANKET	ME	390489	*	EA	1	ICB Has				

TD - Engineering Fabric _ion Component Kit List

	Description	Dwg Size	Number	Rev	Unit	Quantity Required	Location	Quantity Issued	E&F Verified	Routing Form Number	Spares Number / Comment
26	Q3 SHIELD MLI OUTER BLANKET	ME	390490	*	EA	1	ICB Has				
Q3 THERMAL SHIELD ASSEMBLY		ME	390436	C	EA	1					
27	SUPPORT BAND	ME	390083	A	EA	4	P/N	4	✓	77146	7 pcs.
28	RETAINER	MA	390086	*	EA	16	21B1	16	✓	78914	45 pcs.
29	ALUMINUM SPACER	MA	390373	*	EA	32	22A1	32	✓	83629	588 pcs.
30	RETAINING WASHER	MA	390378	*	EA	240	22A4	240	✓	83630	2722 pcs.
31	Q1 & Q3 SHIELD MID-SECTION SECTION	ME	390435	*	EA	2	P/N	2	✓	79382	6 pcs.
32	Q3 COOLING TUBE WELDMENT	MD	390437	A	EA	2	P/N	2	✓	79281	2 pcs.
33	Q3 END SECTION	ME	390439	A	EA	4	P/N	2	✓	79622	6 pcs.
34	NON-IP END EXTENSION SPOOL	ME	390652	*	EA	2	R7,1,4	2	✓	81005	2 pcs.
35	THERMAL SHIELD EXTRUSION SUPPORT BRACKET ASSEMBLY	MD	390783	A	EA	4	R7,1,4	4	✓	81981	16 pcs.
36	BUTTON HEAD CAP SCREW, M5 x 16.0 LG.	MA	393028	*	EA	240	22C7	240	✓	83626	2641 pcs.
Q3 INTERNAL PIPING ASSEMBLY		ME	390213	E	EA	1					
37	PUMPING LINE END FLANGE	MB	390032	B	EA	1	21A3	1	✓	77210	38 pcs.
38	COOLDOWN LINE END FLANGE	MB	390033	B	EA	1	21A4	1	✓	77208	20 pcs.
39	Q1 / Q3 PIPE SUPPORT ASSEMBLY	MD	390092	A	EA	3	P/N	3	✓	76617	6 pcs.
40	RETAINING CLIP	MA	390103	*	EA	12	21B3	12	✓	76785	43 pcs.

TD - Engineering Fabri_ _ion Component Kit List

	Description	Dwg Size	Number	Rev	Unit	Quantity Required	Location	Quantity Issued	E&F Verified	Routing Form Number	Spares Number / Comment
41	TIE BAR RETAINING CLAMP	MB	390136	*	EA	4	21B5	4	✓	77132	5 pcs.
42	Q3 PUMPING LINE	MB	390224	*	EA	1	ICB Has				
43	Q3 COOLDOWN LINE	MB	390225	A	EA	1	P/N	1	✓	81685	1 pc
44	Q3 4.5K INTERCEPT LINE TUBE	MB	390226	*	EA	3	Site 38	3	✓	81303	3 pcs.
45	WELD CONNECTOR ADAPTER	MC	390278	*	EA	1	R1,S1,L3	1	✓	79471	2 pcs.
46	INTERCEPT LINE PIPE STOP	MA	390379	A	EA	6	22A4	6	✓	78894	63 pcs.
47	Q1 / Q3 PIPE ANCHOR	MC	390486	*	EA	1	R8,S1,L4	1	✓	79387	2 pcs.
48	Q3 COLD MASS ASSEMBLY	ME	390108	B		ICB HAS					
49	Q3 PUMPING LINE NON-IP END EXTENSION SPOOL	MD	390650	*	EA	1	R10,1,3	1	✓	82562	1 pc
50	Q3 COOLDOWN LINE NON-IP END EXTENSION SPOOL	MC	390663	*	EA	1	R7,1,2	1	✓	82563	1 pc
51	4.5K INTERCEPT LINE NON-IP END EXTENSION WELDMENT	MD	390679	*	EA	3	R1,3,2	3	✓	82653	3 pcs.
52	4.5K INTERCEPT TUBE BAR BRACE	MB	390816	*	EA	2	22B7	2	✓	83782	12 pcs.
53	M6 x 45.0mm LG HEX SHCS, 18-8 STN STEEL	MA	393017	*	EA	4	22B8	4	✓	73268	29 pcs.
54	M6 HEX NUT, 18-8 STN STEEL	MA	393022	A	EA	4	22C5	4	✓	73269	35 pcs.
55	M6 FLAT WASHER 18-8 STN STEEL	MA	393024	*	EA	4	22C5	4	✓	78891	56 pcs.
56	M6 LOCK WASHER 18-8 STN STEEL	MA	393026	*	EA	4	22C6	4	✓	83571	63 pcs.
	Q3 HEAT EXCHANGER ASSEMBLY	ME	390214	A	EA	1					

TD - Engineering Fabrication Component Kit List

	Description	Dwg Size	Number	Rev	Unit	Quantity Required	Location	Quantity Issued	E&F Verified	Routing Form Number	Spares Number / Comment
57	CORRUGATED TUBE FLANGE	MB	390030	A	EA	1	21A2	1	✓	77207	44 pcs.
	OUTER SHELL WELDMENT	MD	390385	A	EA	1					
58	FLAT END CAP	MD	390178	*	EA	1	R1,2,3	1	✓	79644	2 pcs.
59	HEAT EXCHGER OUTER SHELL PIPE	MD	390215	*	EA	1	P/N	1	✓	79999	1 pc
60	EXTENSION SPOOL	MD	390659	*	EA	1	R10,1,3	1	✓	81007	1 pc
61	EXTENSION WELD FITTING	MD	390661	*	EA	1	22B5	1	✓	80832	5 pcs.
	CORRUGATED TUBE ASSEMBLY	ME	390216	A	EA	1					
62	CORRUGATED TUBE SUPPORT	MC	390028	*	EA	6	R9,S1,L4	6	✓	83314	36 pcs.
63	CORRUGATED TUBE RESTRICTOR	MC	390029	A	EA	1	R9,S1,L4	1	✓	7724	38 pcs.
64	CORRUGATED TUBE WELDMENT	ME	390395	A	EA	1	P/N	1	1	79283	1 pc
65	EXTENSION ADAPTER	MD	390658	*	EA	1	R7,1,4	1	✓	81006	1 pc
	Q3 PIPING ASSEMBLY INSULATION INSTALLATION	ME	390545	A	EA	1					
66	Q1 / Q3 MLI END BLANKET	ME	390542	*	EA	2	ICB Has				
67	Q1 / Q3 MLI MID BLANKET	ME	390543	*	EA	1	ICB Has				
	Q1 & Q3 INSTALLATION TIE ROD ASSEMBLY	MC	390638	*	EA	2					
68	Q1 & Q3 INSTALLATION TIE-ROD SHORT THREADED ROD	MA	390639	*	EA	2	R2,2,2	2	✓	83842	5 pcs.
69	JAM NUT (LH)	MA	393046	*	EA	4	22D6	4	✓	80074	8 pcs.

TD - Engineering Fabrication Component Kit List

	Description	Dwg Size	Number	Rev	Unit	Quantity Required	Location	Quantity Issued	E&F Verified	Routing Form Number	Spares Number / Comment
70	STD ANSI HEX THIN JAM NUT 1/2-13 UNC	MA	393225	*	EA	8	23B5	8	✓	80073	59 pcs.
71	STD HEX COUPLING NUT 1/2-13 UNC (RH-LH)	MA	393226	*	EA	4	23B6	4	✓	83822	15 pcs.
72	THREADED ROD 1/2-13 UNC - 24 x 6 FT LONG	MA	393227	*	EA	2	R7,2,4	2	✓	84004	4 pcs.
73	THREADED ROD 1/2-13 UNC - 24 (LH) x 3 FT LONG	MA	393228	*	EA	2	R1,2,3	2	✓	83824	4 pcs.
	Q3 SUSPENSION SYSTEM INSTALLATION	ME	390528	*	EA	1					
74	TIE BAR SHIM, 6.4 mm	MB	390118	*	EA	4	21B3	4	✓	77204	39 pcs.
75	TIE BAR SHIM, 2.4 mm	MB	390119	*	EA	4	21B4	4	✓	83092	35 pcs.
76	TIE BAR SHIM, 0.8 mm	MB	390120	*	EA	4	21B4	4	✓	77202	21 pcs.
77	SUSPENSION MTG BRACKET	MD	390279	*	EA	4	R9,S1,L1	4	✓	77180	8 pcs.
78	Q1 / Q3 TIE BAR ASSEMBLY	MC	390400	*	EA	2	P/N	2	✓	78086	4 pcs.
79	Q3 COLD MASS WELDED ASSEMBLY	ME	390529	B		ICB HAS					
80	M8 x 50.0 mm LG SHCS 18-8 STN STEEL	MA	393020	*	EA	12	22C3	12	✓	82378	27 pcs.
81	M8 HEX NUT, 18-8 STN STEEL	MA	393023	*	EA	12	22C5	12	✓	83610	331 pcs.
82	M8 FLAT WASHER, 18-8 STN STEEL	MA	393025	*	EA	12	22C6	12	✓	82858	314 pcs.
83	M8 LOCK WASHER, 18-8 STN STEEL	MA	393027	*	EA	12	22C7	12	✓	76744	507 pcs.
	FIXED SUPPORT ASSEMBLY	ME	390041	D	EA	1					
84	SUSPENSION SYSTEM SUPPORT RING ASSEMBLY	ME	390043	B	EA	1	NT02408	1	✓	76906	1 pc

TD - Engineering Fabrication Component Kit List

	Description	Dwg Size	Number	Rev	Unit	Quantity Required	Location	Quantity Issued	E&F Verified	Routing Form Number	Spares Number / Comment
85	SUSPENSION SYSTEM SUPPORT PIN	MB	390047	B	EA	2	R8,S3,L2	2	✓	76914	16 pcs.
86	SUSPENSION SYSTEM SUPPORT PIN SHIM - 1mm	MA	390275	A	EA	8	21D1	8	✓	83295	293 pcs.
87	SUSPENSION SYSTEM SUPPORT PIN SHIM - 0.5mm	MA	390276	*	EA	8	21D1	8	✓	82896	8 pcs.
88	SUSPENSION SYSTEM SUPPORT PIN BOLTS	MA	390277	*	EA	8	21D1	8	✓	76913	58 pcs.
89	TWO PIECE CLAMP ON COLLAR	MA	390321	A	EA	4	22A1	4	✓	76912	8 pcs.
90	SUSPENSION SYSTEM SUPPORT PIN SHIM 0.13 mm	MA	390480	*	EA	8	R2,S2,L4	8	✓	79121	283 pcs.
91	SUSPENSION SYSTEM SUPPORT SHIM 0.25 mm	MA	390481	*	EA	12	R2,S2,L4	12	✓	79122	361 pcs.
	SLIDING SUPPORT ASSEMBLY	ME	390042	C	EA	1					
92	SUSPENSION SYSTEM SUPPORT RING ASSEMBLY	ME	390043	B	EA	1	NT02409	1	✓	76906	3 pcs.
93	SUSPENSION SYSTEM SUPPORT PIN	MB	390047	B	EA	2	R8,S3,L2	2	✓	76914	16 pcs.
94	SUSPENSION SYSTEM SUPPORT PIN SHIM - 1mm	MA	390275	A	EA	8	21D1	8	✓	83295	293 pcs.
95	SUSPENSION SYSTEM SUPPORT PIN SHIM - 0.5mm	MA	390276	*	EA	8	ICB Has				
96	SUSPENSION SYSTEM SUPPORT PIN BOLTS	MA	390277	*	EA	8	21D1	8	✓	76913	58 pcs.
97	SUSPENSION SYSTEM SUPPORT PIN SHIM 0.13 mm	MA	390480	*	EA	8	R2,S2,L4	8	✓	79121	283 pcs.
98	SUSPENSION SYSTEM SUPPORT SHIM 0.25 mm	MA	390481	*	EA	12	R2,S2,L4	12	✓	79122	361 pcs.
	Q3 MAGNET INSULATION INSTALLATION	ME	390527	B	EA	1					
99	MOUNTING LUG BLANKET	MC	390496	*	EA	8	Site 38	8	✓		62 pcs.

TD - Engineering Fabrication Component Kit List

	Description	Dwg Size	Number	Rev	Unit	Quantity Required	Location	Quantity Issued	E&F Verified	Routing Form Number	Spares Number / Comment
100	Q1/Q3 END BLANKET	ME	390521	*	EA	2	ICB Has				
101	Q1/Q3 MID BLANKET	ME	390522	*	EA	1	ICB Has				