US LHC ACCELERATOR PROJECT

brookhaven - fermilab - berkeley

DFBX Feedboxes Interfaces Overview

Carol Corradi

LBNL

DFBX EDR

14 Mar. 2001

CERN

Interfaces to review

- Connections to Magnets, ES210,230
- Power Converters, ES250
- Electrical Signals, ES270
- Tunnel and Alignment, ES260

Inner Triplet Feedboxes:

DFBX - LQXB

DFBX - LQXB Interconnect Parts Responsibilities

Component	Drawing Number	Responsible Laboratory
DFBX		LBNL
Clam shell heat shield (DFBX side of interconnect)	TBD	LBNL
Pumping line bellows (XB)	5520-MD-390065	FNAL[a]
Cold mass bellows (MQX1, MQX2)	5520-MC-390073	FNAL[a]
Shield line flex metal hose (Ex, E1, E2)	TBD	LBNL
Cool down bellows (LD1/LD2)	5520-MC-390061	FNAL[a]
Beam tube bellows (V)	TBD	CERN
Beam screen	TBD	CERN
LQXB		FNAL
Electrical soldering equipment	N/A	CERN
Splice kit	TBD	FNAL
Sliding bellows closure and flange	5520-ME-390021	FNAL
Pumping line and cold mass flanges	5520-MC-390032	FNAL
Cool down line flange	5520-MB-390033	FNAL
Shield line flanges	5520-MB-390035	FNAL
Heat exchanger inner tube flange (Cy)	5520-MB-390030	FNAL
Flange weld rings	5520-XX-XXXXXX	FNAL[a]

[a] FNAL part provided to LBNL and shipped to CERN with the DFBX.

DFBX - LQXB Piping Layout - high side

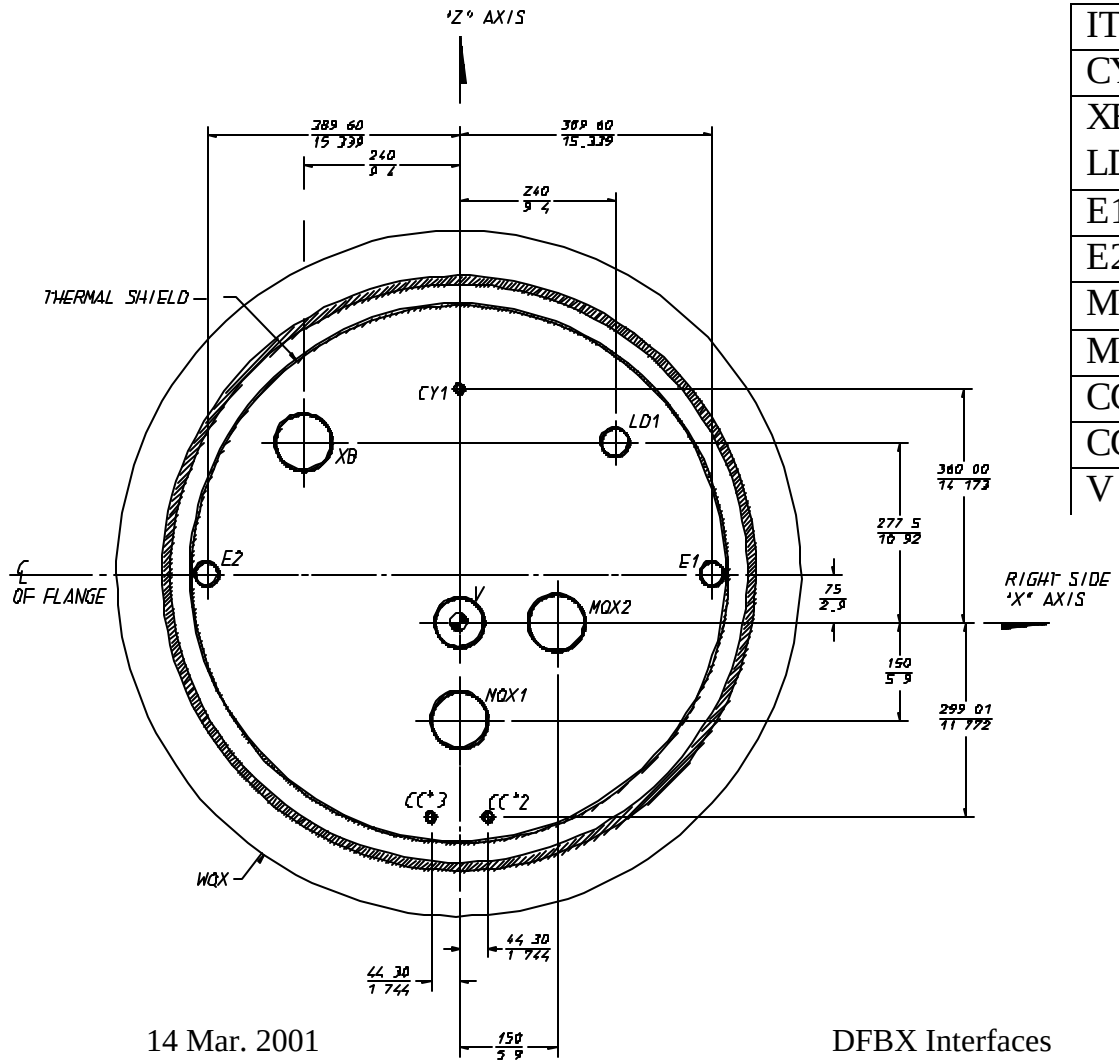

ITEM	FUNCTION	OD/ID mm
CY1	1.9K SUPPLY	15.9/13.4
XB LD1	1.9K RETURN COOL DOWN	88.9/85.6 44.4/41.9
E1	SHIELD SUPPLY	38.1/34.8
E2	SHIELD RETURN	38.1/34.8
MQX1	Q3 BUS DUCT	88.9/85.6
MQX2	Q3 DIAGNOSTICS	88.9/85.6
CC'2	TAS SUPPLY	15.9/13.4
CC'3	TAS RETURN	15.9/13.4
V	BORE TUBE	78.0/74.0

DFBX - LQXB Piping Layout - low side

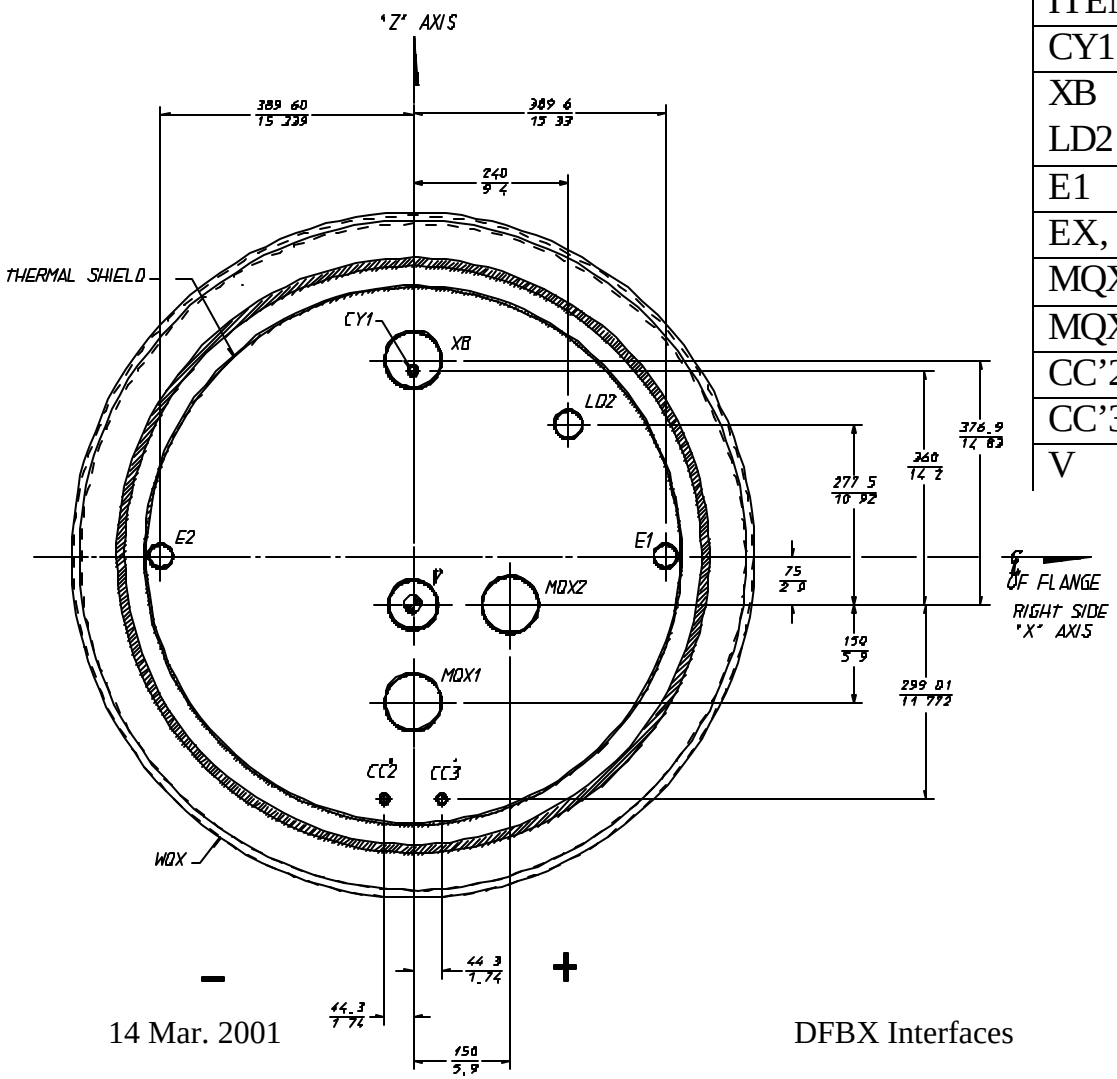

ITEM	FUNCTION	OD/ID mm
CY1	1.9K SUPPLY	15.9/13.4
XB LD2	1.9K RETURN COOL DOWN	88.9/85.6 44.4/41.9
E1	SHIELD SUPPLY	38.1/34.8
EX, E2	SHIELD RETURN	38.1/34.8
MQX1	Q3 BUS DUCT	88.9/85.6
MQX2	Q3 DIAGNOSTICS	88.9/85.6
CC'2	TAS SUPPLY	15.9/13.4
CC'3	TAS RETURN	15.9/13.4
V	BORE TUBE	78.0/74.0

Longitudinal changes in piping at operating temperature

DFBX Pipe No.	Free Length on LQX Side (mm)	Change on LQX Side	Total Change	Change on DFBX Side	Free Length on DFBX Side (mm)
V	6540	19.6	23.8	4.2	1398
LD1/LD2	6540	19.6	21.4	1.8	584
CC'3	6540	19.6	26.5	6.9	2284
CC'2	6540	19.6	23.8	4.2	1398
CY1	6540	19.6	21.4	1.8	584
Ex, E2	6540	26.2	30.4	4.2	1398
E1	6540	26.2	30.4	1.8	584
MQX1	6540	19.6	23.8	4.2	1398
MQX2	6540	19.6	23.8	4.2	1398
XB	6540	19.6	21.4	1.8	584

Interface bellows design parameters

DFBX Pipe No.	ID (mm)	OD (mm)	Int. Des. Pres. bar	Ext. Des. Pres. bar	End Tube Parameters ID x wall x length (mm)	Comp. Length (mm)	Free Length (mm)	Reqd Stroke (mm)	Ref. Dwg. List
V	88.9	109.2	0	6	88.9 x 0.889 x 76.2	57.1	69.0	23.8	tbd
LD1/LD2	57.2	73.7	20	6	57.2 x 0.889 x 76.2	231	250	21.4	[s]
CC'3					Expansion Loop			26.5	
CC'2					Expansion Loop			23.8	
CY1					Expansion Loop			21.4	
Ex/E2	19.1	38.1	22	6	Flex Metal Hose			30.4	tbd
E1	19.1	38.1	22	6	Flex Metal Hose			30.4	tbd
MQX1[a]	101.6	124.5	20	1	120.1 x 4.4 x tbd	57	127.0	23.8	[t]
MQX2[a]	101.6	124.5	20	1	120.1 x 4.4 x tbd	57	127.0	23.8	[t]
XB	101.6	127.0	4	6	101.6 x 0.889 x 76.2	231	250	21.4	[u]

Notes: a. Two bellows required for each interconnect.

Interconnections for MQX, V, and XB pipes

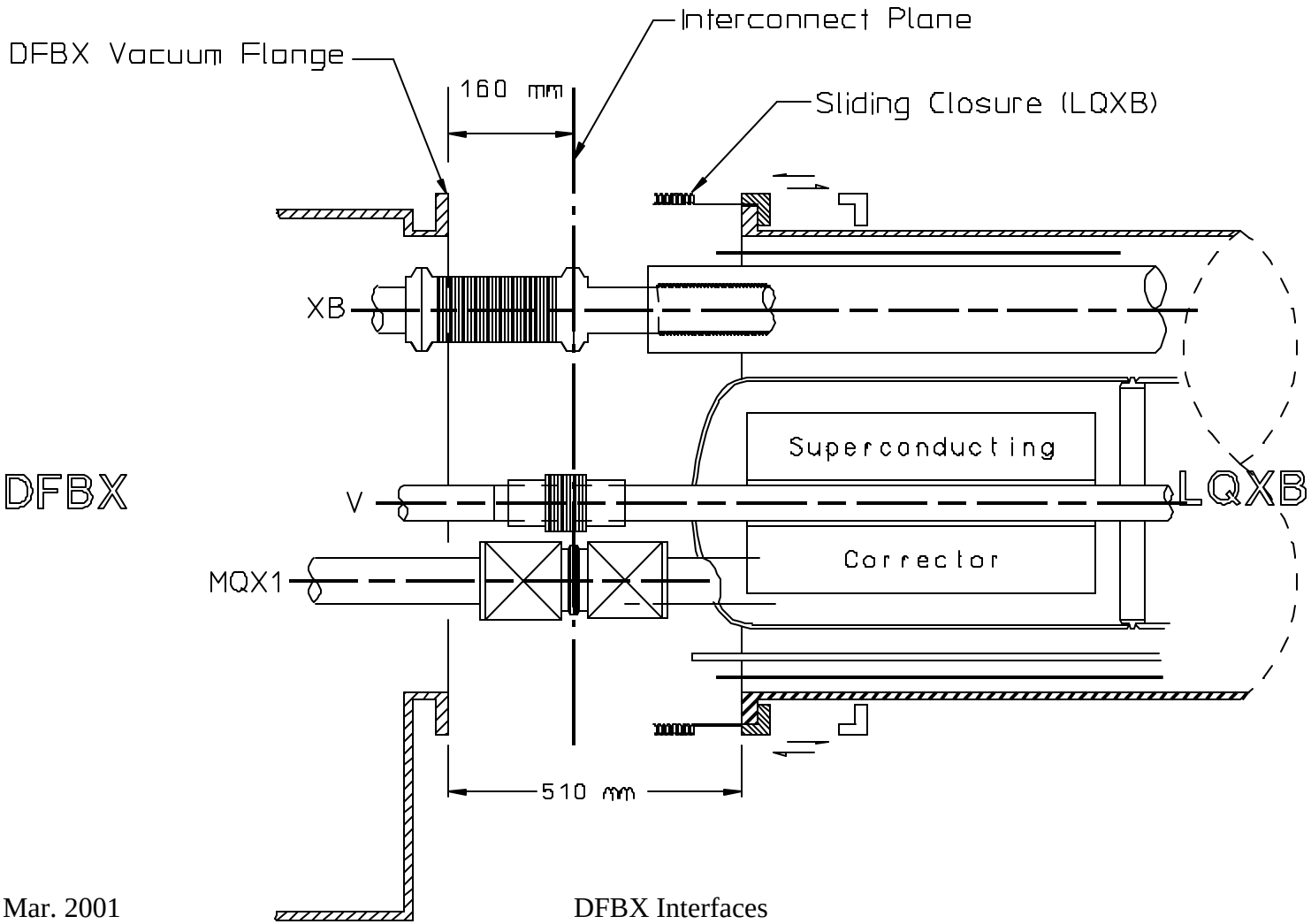

Radial clearances for welders and cutters - high side

40 mm clearance required

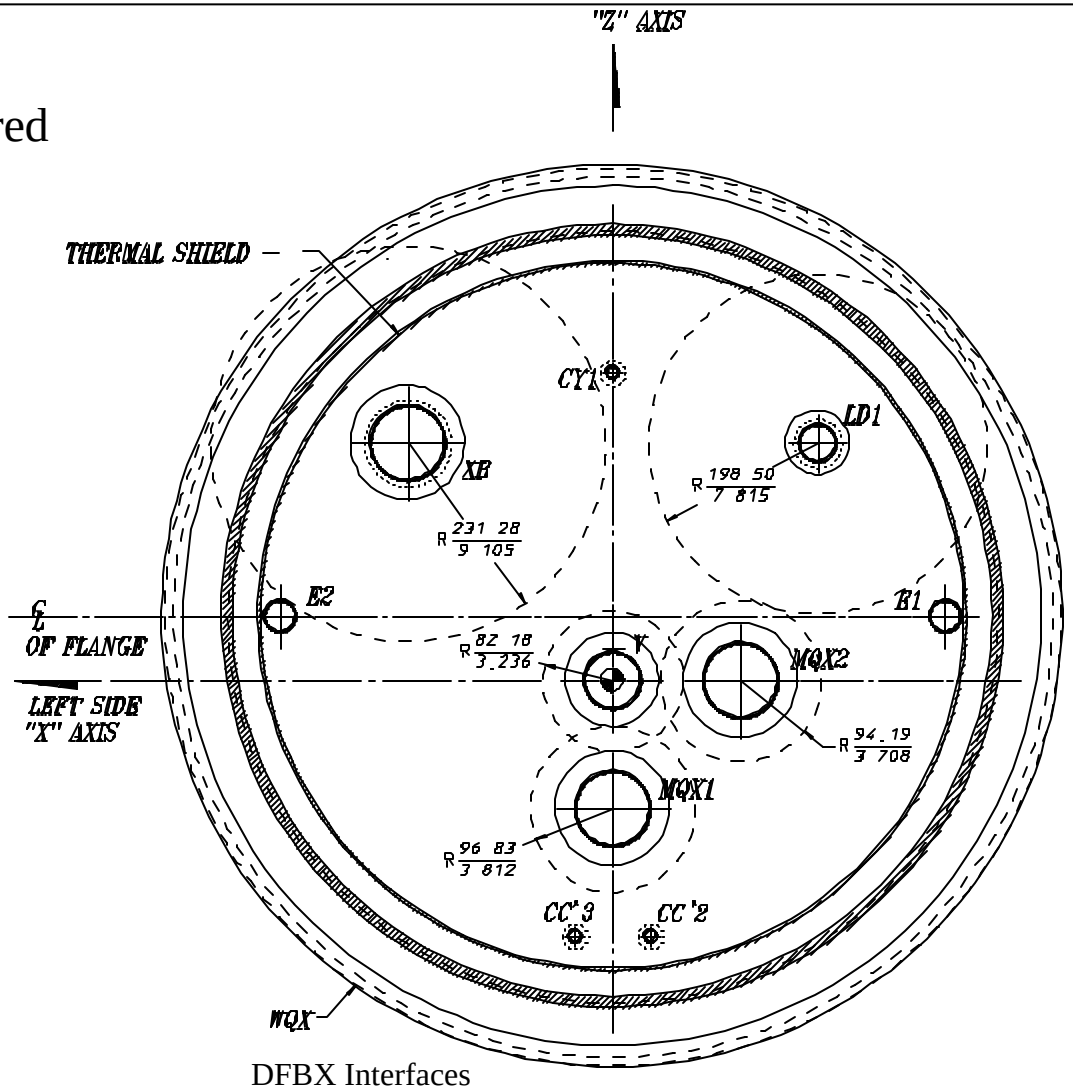

Radial clearances for welders and cutters - low side

40 mm clearance required

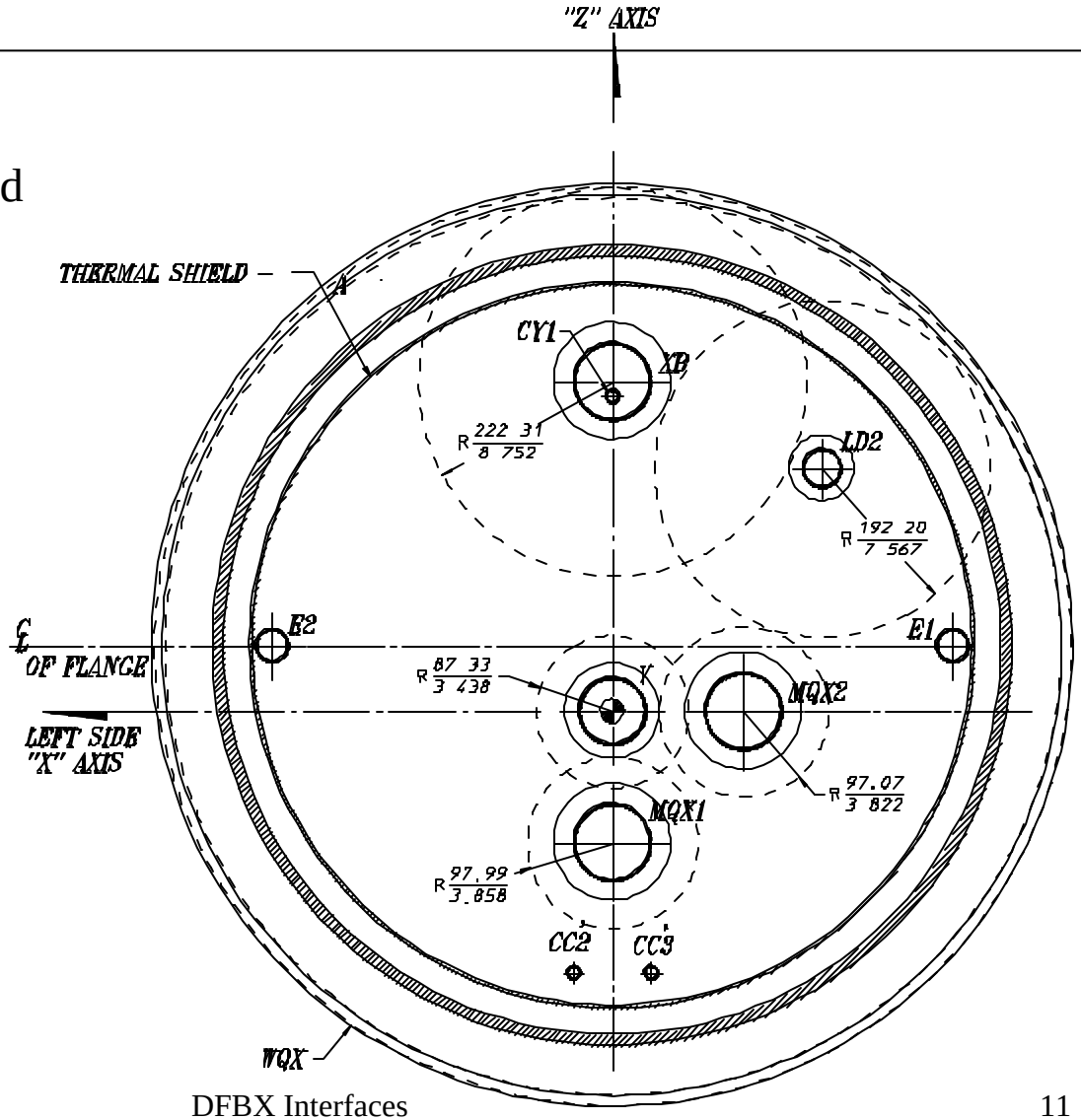

MQX1 power bus parameters

Item	Insulated Bus Area (mm x mm)	Number of Busses	Test Voltage [9]	Free Length (m)
Q1 – Q3 Power Bus (+ and -)	16.5 x 3.6	1 pair	1400	0.5
Q2 Trim Bus (+ and -)	16.5 x 3.6	1 pair	1400	0.5
600 A Corrector Bus	2.5 x 1.7	14 (7 pair)	600	0.5
120 A Corrector Bus	2.5 x 1.7	10 (5 pair)	600	0.5

MQX2 diagnostic cable parameters

Item	Cable Type	AWG	No. Cables	Test Voltage [9]	Free Length (m)
Quad Voltage Taps	2-wire	26	12	1400	0.5
Quench Heaters	2-wire	26	8	1400	0.5
Temp Sensors	4-wire	30	8	200	0.5
Corrector Volt. Taps	1-wire	26	12	1400	0.5
Cryo Heaters	2-wire	26	8	1400	0.5

MQX1 bus cross-sectional view

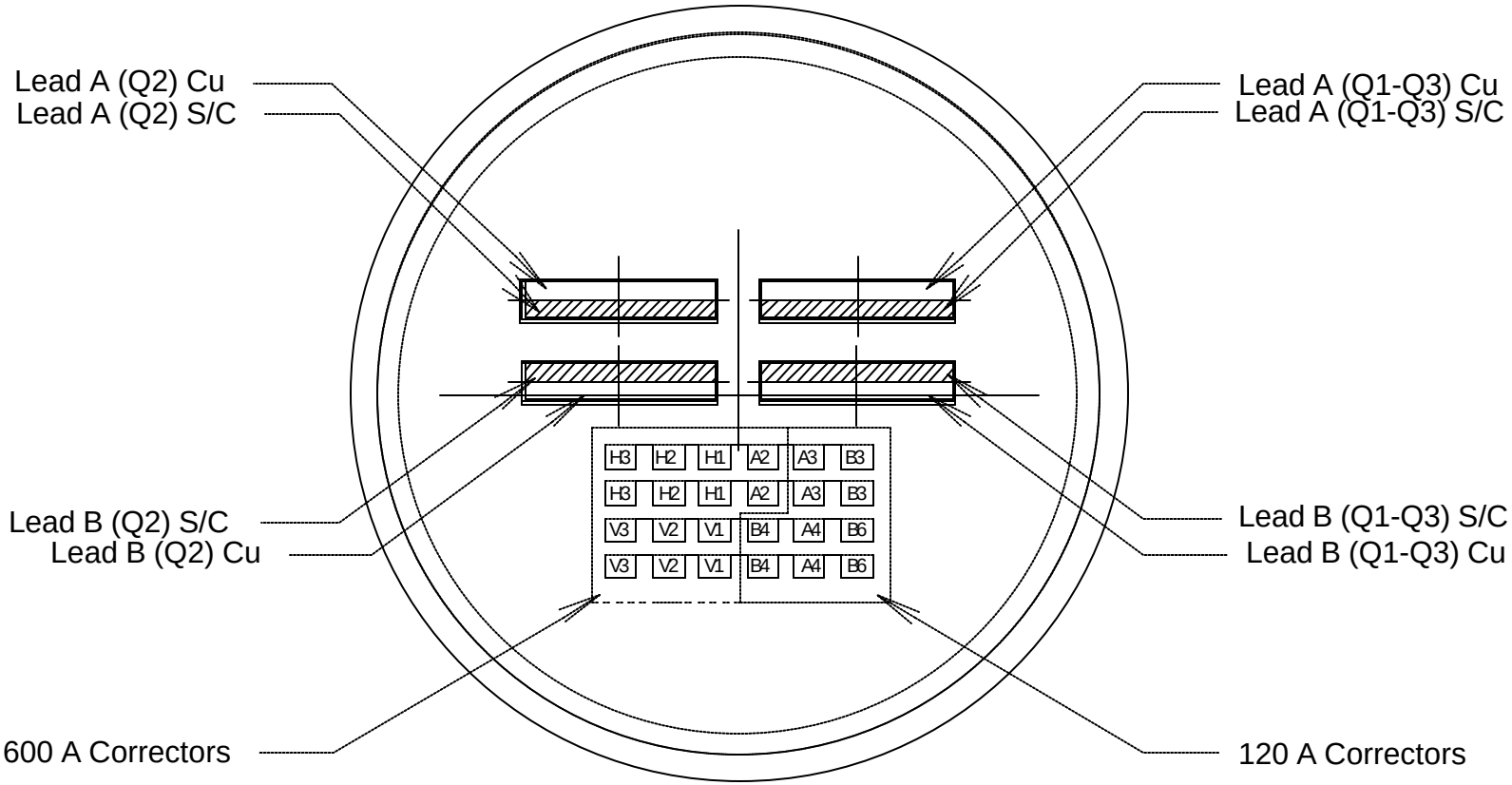

MQX1 bus connection - longitudinal view

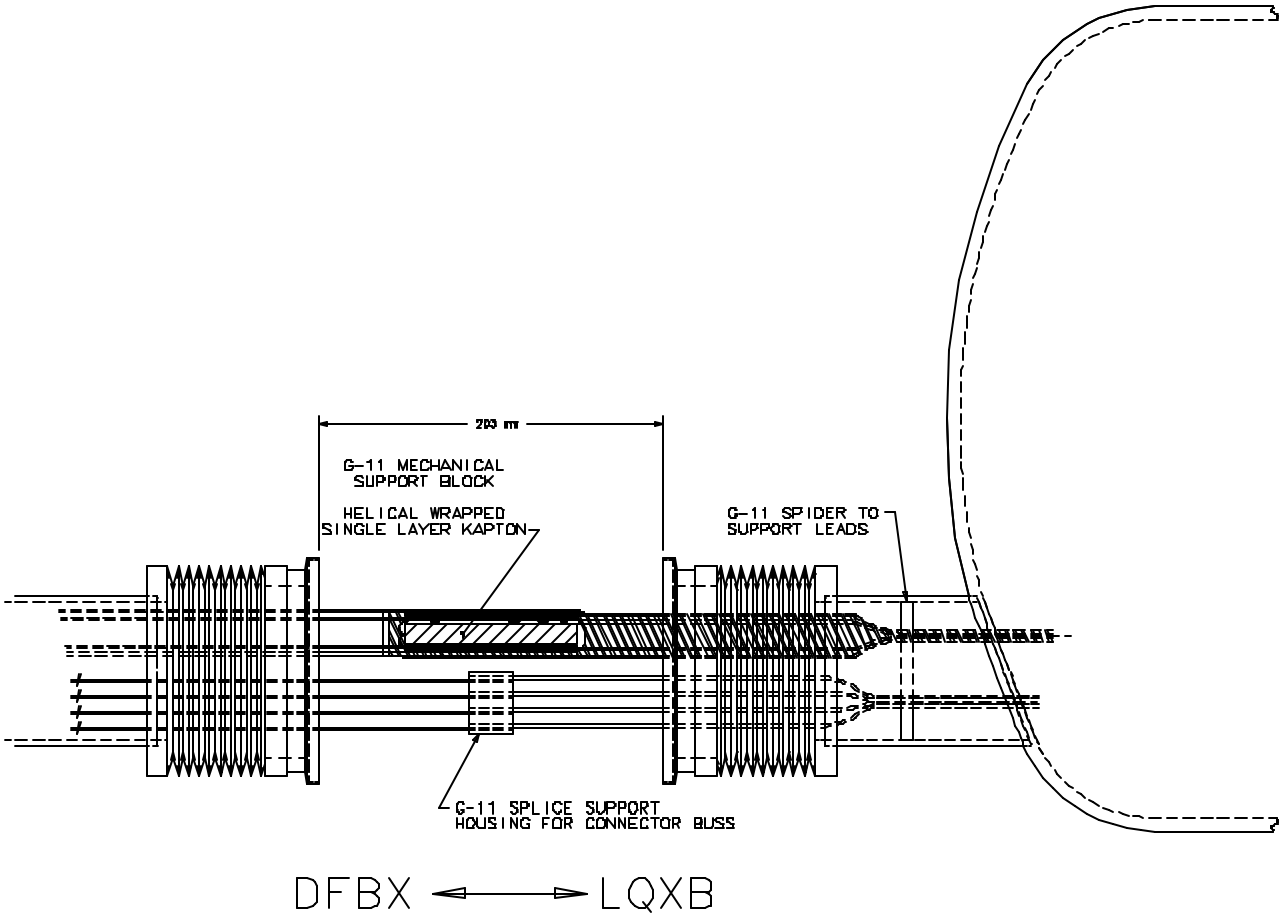

Bus connection longitudinal view detail

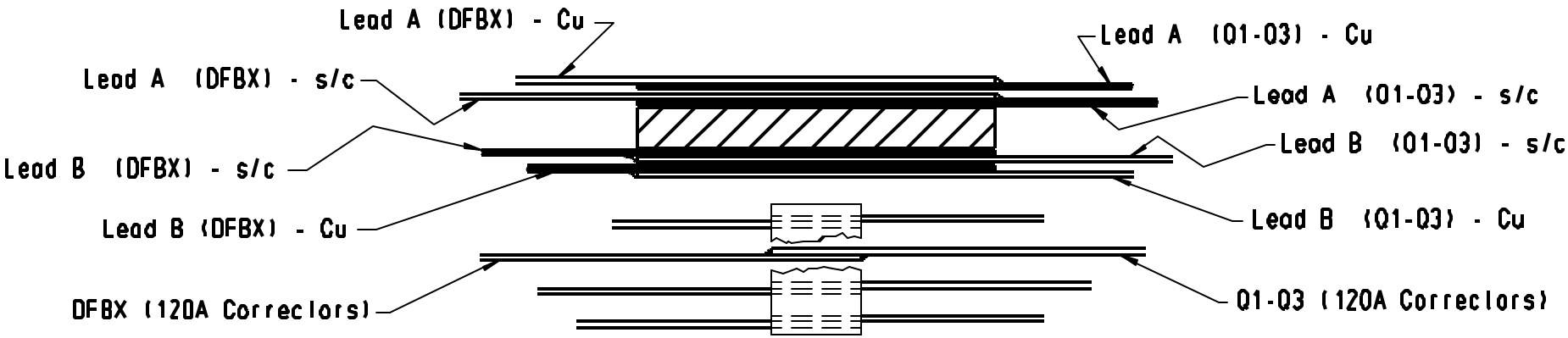

Interface Specification

DFBX - LBX

DFBX - LBX interconnect parts responsibilities

Component	Connecting Components	Drawing Number	Responsible Laboratory
DFBX Assembly	N/A	TBD	LBNL
DFBX thermal shield bridge	DFBX to D1	TBD	LBNL
Instrumentation line flex hose	i to MBX2	TBD	LBNL
Shield line bellows	e1 - Ex, e2 - E2	5520-MC-390056 [a]	LBNL
Flanges for shield lines	e1, e2, Ex, E2	5520-MC-390035 [b]	LBNL
Cool down bellows	c - LD1	5520-MC-390061 [c]	LBNL
Cool down line flange	c, LD1	5520-MC-390033 [d]	LBNL
Beam tube bellows	V - V	TBD	CERN
Beam screen supply flex hose	c' - CC'2	TBD	LBNL
Heat exchanger inner tube flex hose	cy, cy_t – CY2	TBD	LBNL
Flange weld rings	N/A	TBD	LBNL
LBX Assembly	N/A	TBD	BNL
Electrical soldering equipment	N/A	N/A	CERN
LBX vacuum bellows closure and flange	DFBX - LBX	TBD	BNL
Vent transfer line bellows	xb_t, xb - XB	TBD	BNL
Cold mass bellows	m/c – MBX1	01055055 [e]	BNL
Flange	m/c line	12140089 [f]	BNL
Flange	i line	14010306 [g]	BNL

DFBX - LBX piping layout - left side

LBX	DFBX	Function	mm	Y*, mm ±2
V	V	Bore tube	78/74	-109.5
c	LD1	Cool down	44.4/41.9	-101.5
c’	CC'2	TAS supply	15.9/13.4	-377
	CC'3	TAS return	15.9/13.4	-377
cy	CY2	1.9 K supply	15.9/13.4	-377
e1	Ex	Shield supply	38.1/34.8	-56.5
e2	E2	Shield return	38.1/34.8	-56.5
m/c	MBX1	Bus duct	88.9/85.6	-114.4
i	MBX2	Diagnostics	12.7/9.4	-367
xb_t	XB	1.9 K return	73.0/68.8	-113.6

* measured from DFBX flange facing D1

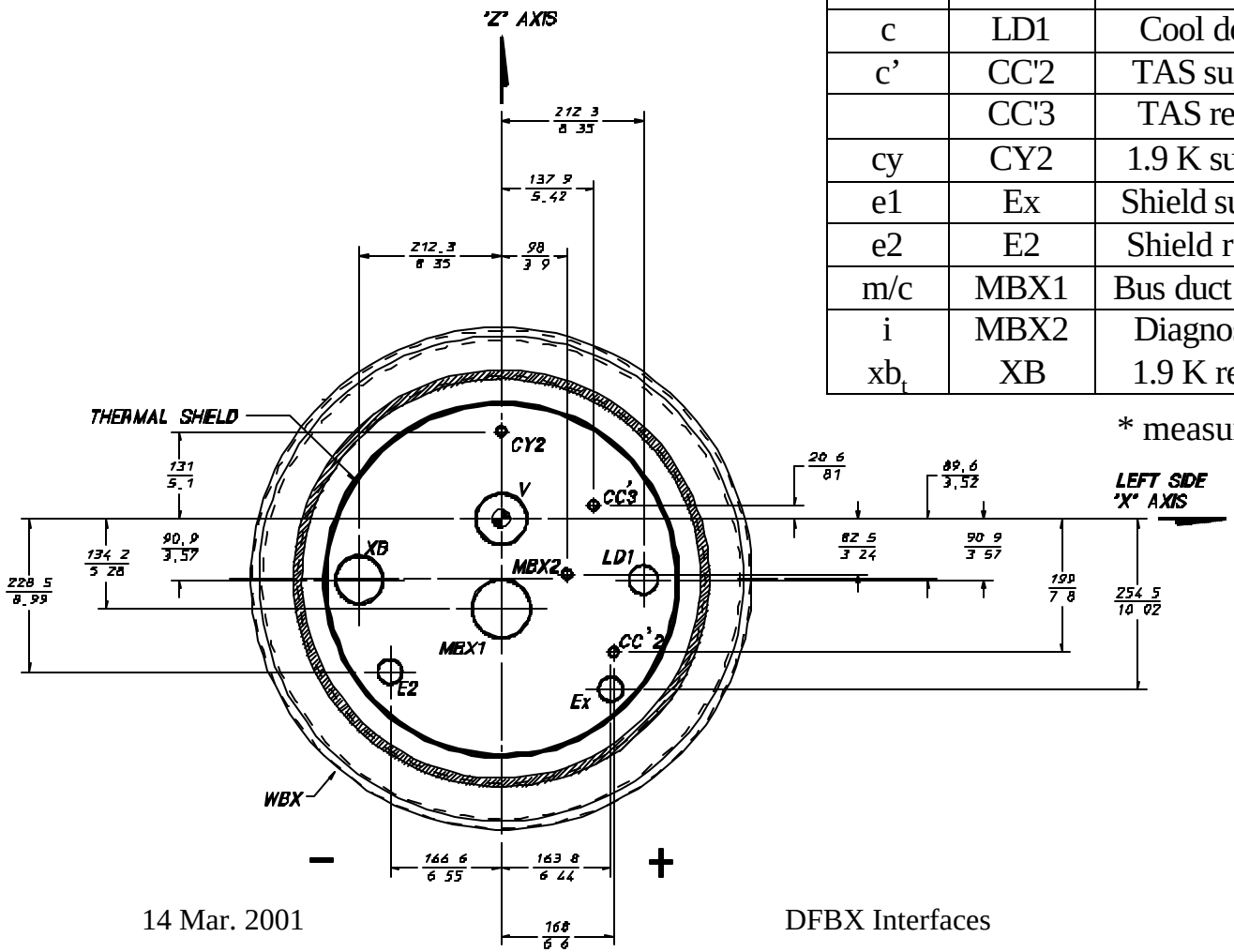

DFBX - LBX piping layout - right side

LBX	DFBX	Function	mm	Y*, mm ±2
V	V	Bore tube	78/74	109.5
c	LD1	Cool down	44.4/41.9	101.5
c’	CC'2	TAS supply	15.9/13.4	377
	CC'3	TAS return	15.9/13.4	377
cy_t	CY2	1.9 K supply	15.9/13.4	377
e1	Ex	Shield supply	38.1/22.1	56.5
e2	E2	Shield return	38.1/22.1	56.5
m/c	MBX1	Bus duct	88.9/85.6	114.4
i	MBX2	Diagnostics	12.7/9.4	367
xb	XB	1.9 K return	50.8/47.5	113.6

* measured from DFBX flange facing D1

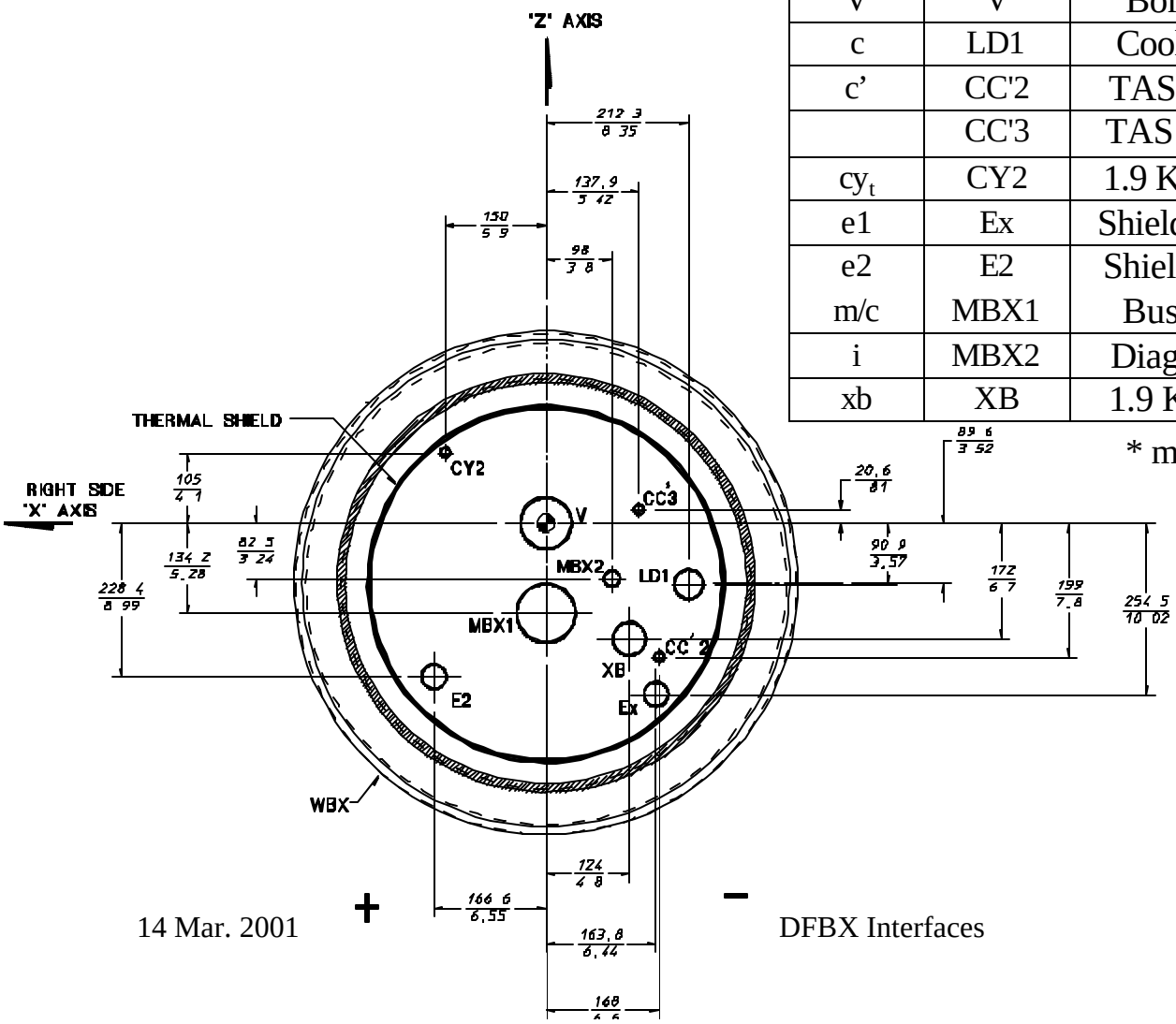

DFBX cold/warm piping locations - left side

DFBXC and DFBXG

Table 5.4-1, Transverse Locations of Left-side DFBX Piping[a]

DFBX Pipe No.	Cold Locations[b]		Warm Locations	
	X	Z	X	Z
LD1	211.7	-91.9	212.3	-90.9
CC'2	167.5	-198.5	168	-199
CY2	0.0	131.6	0.0	131.0
Ex	163.1	-252.6	163.8	-254.5
E2	-166.1	-228.9	-166.6	-228.5
MBX1	0.0	-133.9	0.0	-134.2
MBX2	97.7	-82.3	98.0	-82.5
WBX	0.0	-87.7	0.0	-89.8
XB	-211.7	-91.4	-212.3	-90.9

Notes:

a. DFBX Beam tube axis moves 0.2 mm in negative z-direction upon cooldown, moving the DFBX coordinate system origin down 0.2 mm. There is no shift in the x-direction upon cooldown.

b. Cold coordinates above are relative to the DFBX cold beam tube.

DFBX cold/warm piping locations - right side

DFBXD and DFBXH

Table 5.6-1 Transverse Locations of Right-side DFBX Piping[a]

DFBX Pipe No.	Cold Locations[b]		Warm Locations	
	X	Z	X	Z
LD1	-211.7	-91.4	-212.3	-90.9
CC'2	-167.5	-199.5	-168	-199
CY2	149.6	104.7	150	105.0
Ex	-163.1	-252.6	-163.8	-254.5
E2	166.1	-227.7	166.6	-228.4
MBX1	0.0	-129.8	0.0	-130.2
MBX2	-97.7	-82.3	-98.0	-82.5
WBX	0.0	-87.7	0.0	-89.6
XB	-123.6	-171.5	-124	-172

Notes:

a. The DFBX beam tube moves 0.2 mm in negative z-direction upon cooldown, moving the DFBX coordinate system origin down 0.2 mm. There is no shift in the x-direction upon cooldown.

b. Cold co-ordinates above are relative to the DFBX cold beam tube.

Longitudinal change upon cooling to operating temperature

DFBX Pipe No.	Free Length on LBX Side (mm)	Change on LBX Side	Total Change	Change on DFBX Side	Free Length on DFBX Side (mm)
V	5373	16.1	20.3	4.2	1398
LD1	5373	16.1	17.9	1.8	584
CC'2	5373	16.1	17.9	1.8	584
CC'3	5373	16.1	20.3	4.2	1398
CY2	5373	16.1	17.9	1.8	584
Ex	5373	16.7	20.9	4.2	1398
E2	5373	16.1	17.9	1.8	584
MBX1	5373	16.1	20.3	4.2	1398
MBX2	5373	16.1	17.9	1.8	584
XB	5373	16.1	23.0	6.9	2284

Interconnect bellows design parameters

DFBX Pipe No.	ID (mm)	OD (mm)	Int. Des. Pres. bar	End Tube Parameters ID x wall x length (mm)	Comp. Length (mm)	Free Length (mm)	Reqd Stroke (mm)	Ref. Dwg. List
V	88.9	109.2	0	88.9 x 0.889 x 76.2	83.8	101.6	20.3	tbd
LD1	57.7	73.7	20	57.2 x 0.889 x 76.2	231.0	250.0	17.9	[c]
CC'2				Loop/ Flexible hose			17.9	tbd
CC'3				Loop/ Flexible hose			20.3	tbd
CY2				Loop/ Flexible hose			17.9	tbd
Ex	47.6	62.2	22	47.6 x 0.889 x 76.2	231.0	250.0	20.9	[a]
E2	47.6	62.2	22	47.6 x 0.889 x 76.2	231.0	250.0	17.9	[a]
MBX1	90.4	103.1	19	RHIC Bellows	241.0	254.0	20.3	[e]
MBX2				Flexible Hose			17.9	tbd
XB	57.2	69.9	tbd	BNL Bellows	208.0	220.0	23.0	tbd

MBX1 bus duct connection

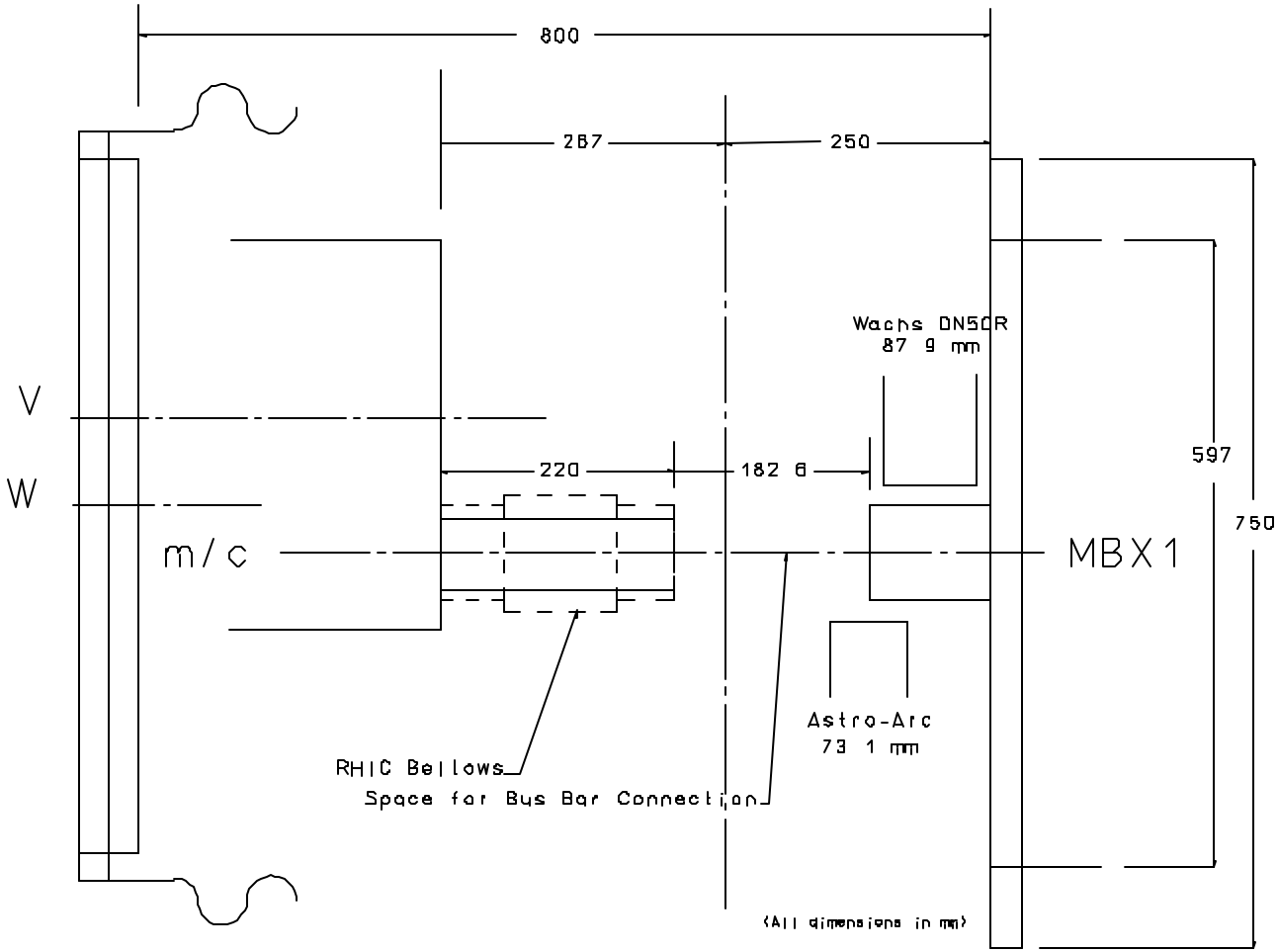

XB pumping line interconnect

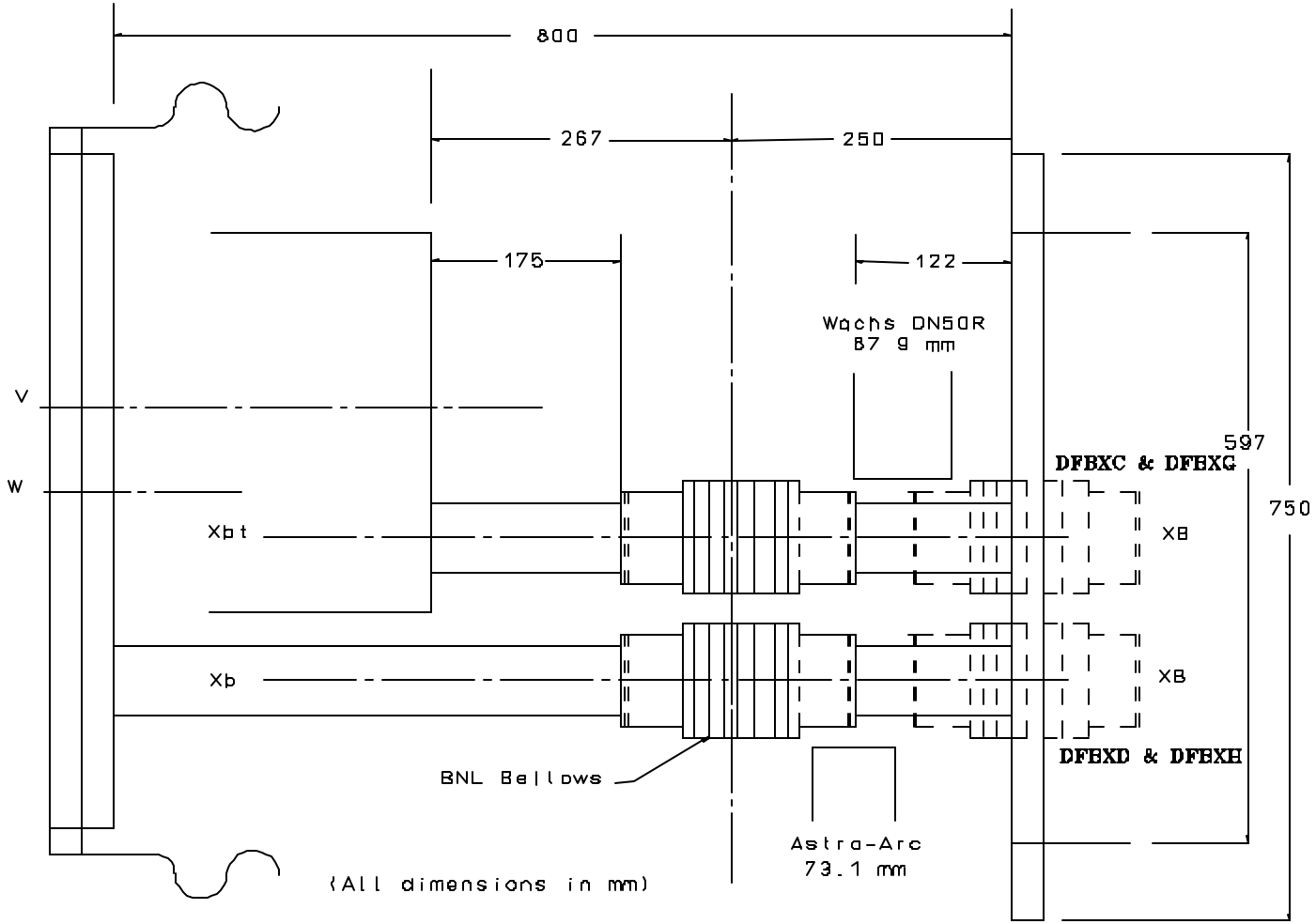

Cooldown/Venting Piping Interconnect

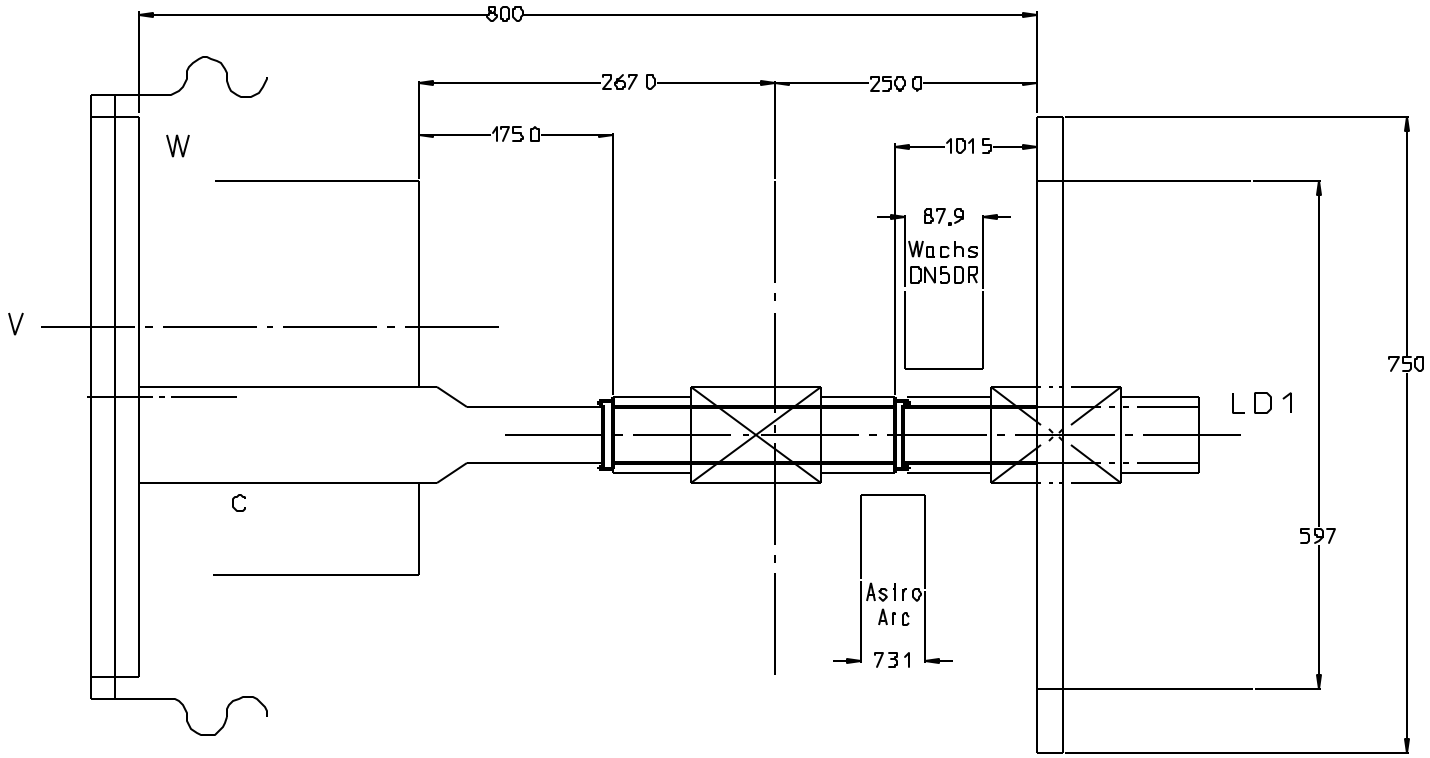

Beam screen cooling and 1.9K supply, CC’2, CC’3, CY

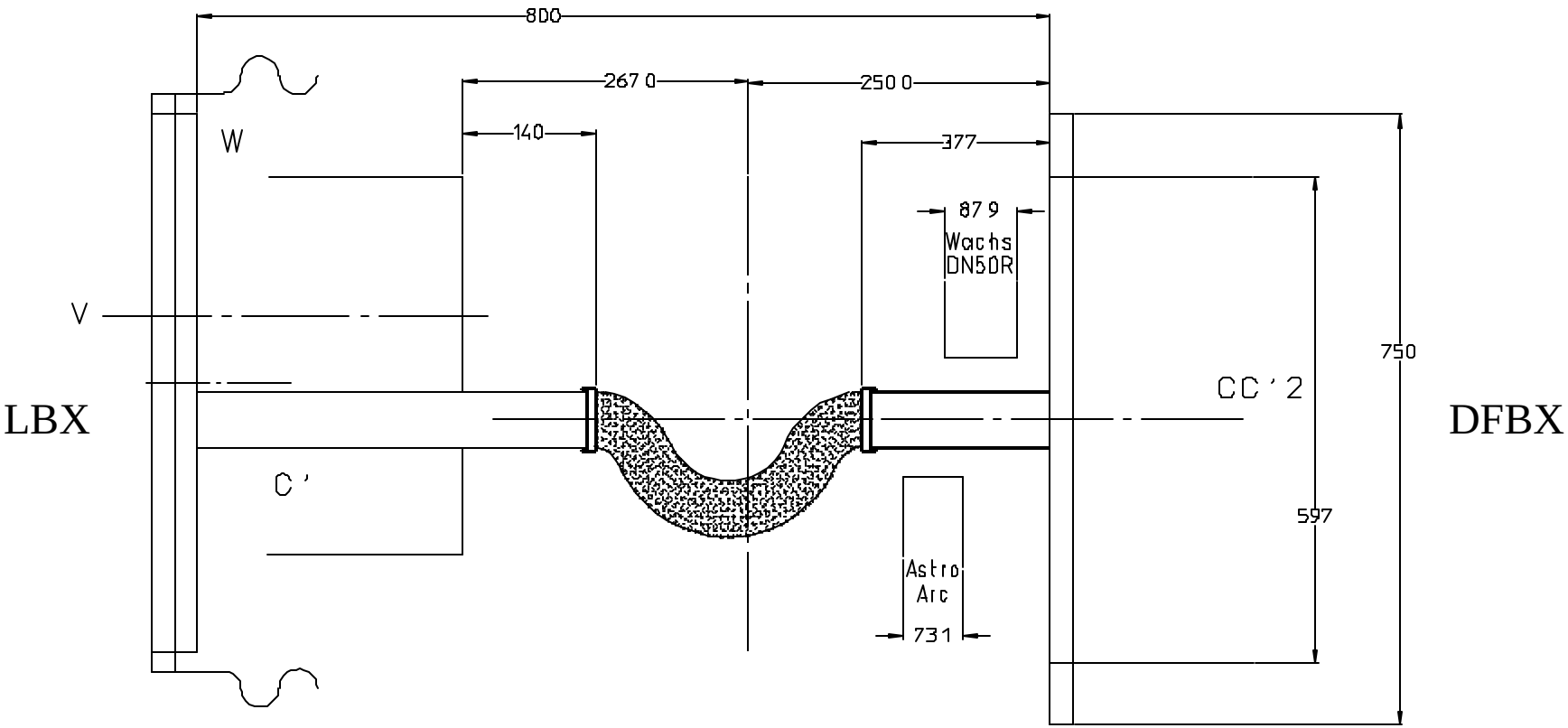

Not to scale

MBX1 power bus parameters

Item	Insulated Bus Area (mm x mm)	Number of Busses	Test Voltage [7]	Free Length (m)
D1 Power Bus (+)	16.5 x 3.6	1	1400	0.5
D1 Power Bus (-)	16.5 x 3.6	1	1400	0.5

DFBX bus cross-section and side interconnect views

DFBX bus cross-sectional view

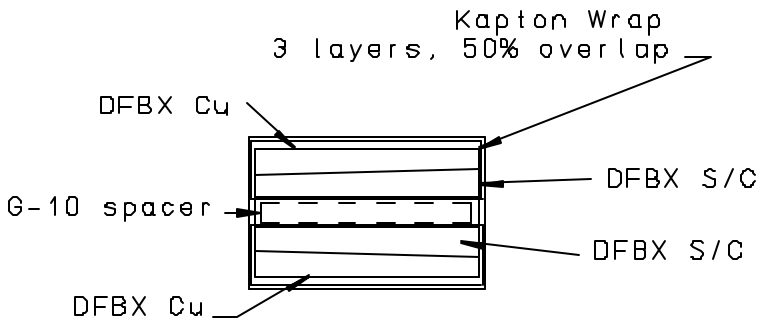

Bus interconnect side-view

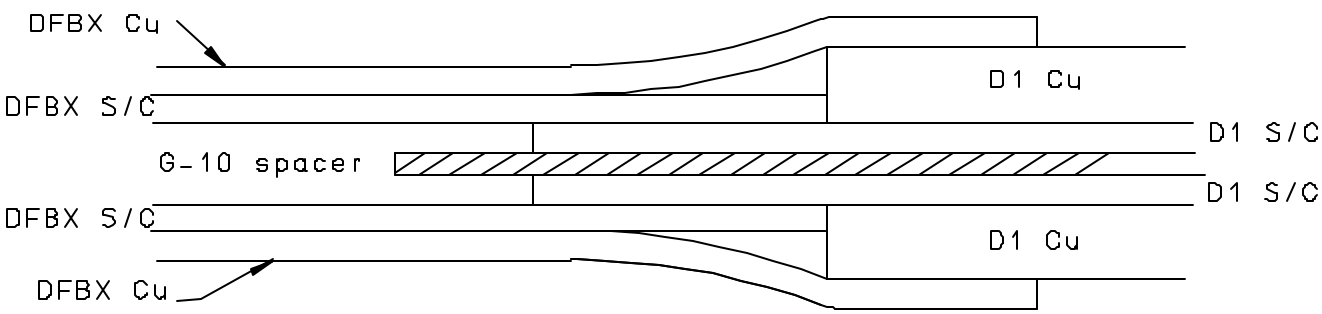

MBX2 diagnostic cable parameters

Item	Cable Type	AWG	Number of Cables	Test Voltage [7]	Free Length (m)
Voltage taps	3-wire	28	2	1200	.5
Quench heaters	2-wire	14	2	1200	.5
Warm-up heater	2-wire	26	2	1200	.5
Thermometers	4-wire	32	2	200	.5
Phase separator liquid indicators (temp. sensors)	4-wire	26	2	TBD	.5

DFBX - Power Converters

Current lead arrangements and designations IR 2-8 left

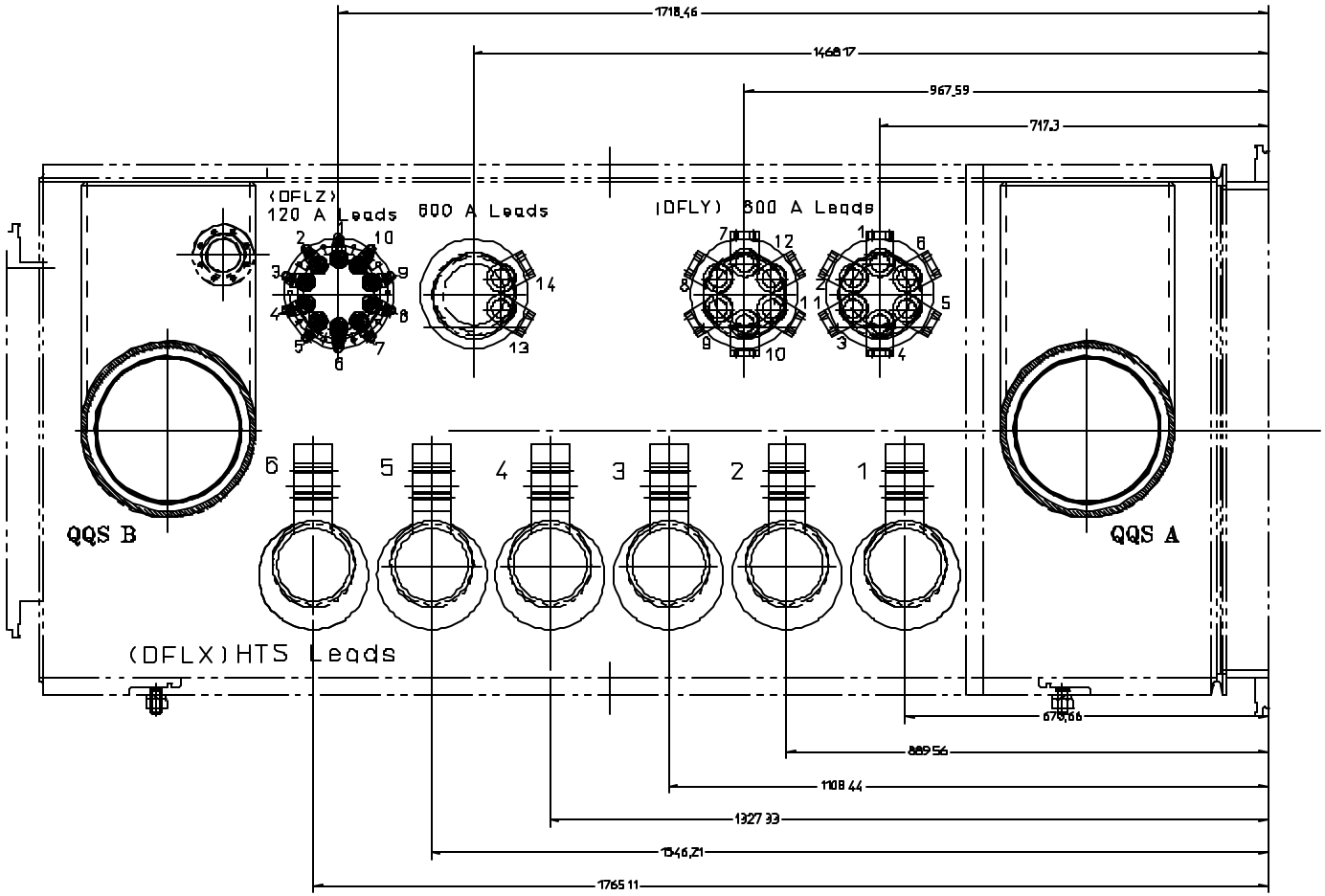

Magnet power schematic and HTS lead designations

IR2, 8

Lead ID	DFBX C	DFBX D	DFBX G	DFBX H
DFLX1	RTQX2.L2	RTQX2.R2	RTQX2.L8	RTQX2.R8
DFLX2	RTQX2.L2	RTQX2.R2	RTQX2.L8	RTQX2.R8
DFLX3	RQX.L2	RQX.R2	RQX.L8	RQX.R8
DFLX4	RQX.L2	RQX.R2	RQX.L8	RQX.R8
DFLX5	RD1.L2	RD1.R2	RD1.L8	RD1.R8
DFLX6	RD1.L2	RD1.R2	RD1.L8	RD1.R8

Magnet power schematic and 600 A lead designations

IR2, 8

Lead ID	DFBX C	DFBX D	DFBX G	DFBX H
DFLY1	RQSX3.L2	RQSX3.R2	RQSX3.L8	RQSX3.R8
DFLY2	RQSX3.L2	RQSX3.R2	RQSX3.L8	RQSX3.R8
DFLY3	RCBXH3.L2	RCBXH3.R2	RCBXH3.L8	RCBXH3.R8
DFLY4	RCBXH3.L2	RCBXH3.R2	RCBXH3.L8	RCBXH3.R8
DFLY5	RCBXV3.L2	RCBXV3.R2	RCBXV3.L8	RCBXV3.R8
DFLY6	RCBXV3.L2	RCBXV3.R2	RCBXV3.L8	RCBXV3.R8
DFLY7	RCBXH2.L2	RCBXH2.R2	RCBXH2.L8	RCBXH2.R8
DFLY8	RCBXH2.L2	RCBXH2.R2	RCBXH2.L8	RCBXH2.R8
DFLY9	RCBXV2.L2	RCBXV2.R2	RCBXV2.L8	RCBXV2.R8
DFLY10	RCBXV2.L2	RCBXV2.R2	RCBXV2.L8	RCBXV2.R8
DFLY11	RCBXH1.L2	RCBXH1.R2	RCBXH1.L8	RCBXH1.R8
DFLY12	RCBXH1.L2	RCBXH1.R2	RCBXH1.L8	RCBXH1.R8
DFLY13	RCBXV1.L2	RCBXV1.R2	RCBXV1.L8	RCBXV1.R8
DFLY14	RCBXV1.L2	RCBXV1.R2	RCBXV1.L8	RCBXV1.R8

Magnet power schematic and 120 A Lead designations

IR2, 8

Lead ID	DFBX C	DFBX D	DFBX G	DFBX H
DFLZ1	RCTX3.L2	RCTX3.R2	RCTX3.L8	RCTX3.R8
DFLZ2	RCTX3.L2	RCTX3.R2	RCTX3.L8	RCTX3.R8
DFLZ3	RCSX3.L2	RCSX3.R2	RCSX3.L8	RCSX3.R8
DFLZ4	RCSX3.L2	RCSX3.R2	RCSX3.L8	RCSX3.R8
DFLZ5	RCSSX3.L2	RCSSX3.R2	RCSSX3.L8	RCSSX3.R8
DFLZ6	RCSSX3.L2	RCSSX3.R2	RCSSX3.L8	RCSSX3.R8
DFLZ7	RCOSX3.L2	RCOSX3.R2	RCOSX3.L8	RCOSX3.R8
DFLZ8	RCOSX3.L2	RCOSX3.R2	RCOSX3.L8	RCOSX3.R8
DFLZ9	RCOX3.L2	RCOX3.R2	RCOX3.L8	RCOX3.R8
DFLZ10	RCOX3.L2	RCOX3.R2	RCOX3.L8	RCOX3.R8

Current lead arrangements and designations IR1R, 5R

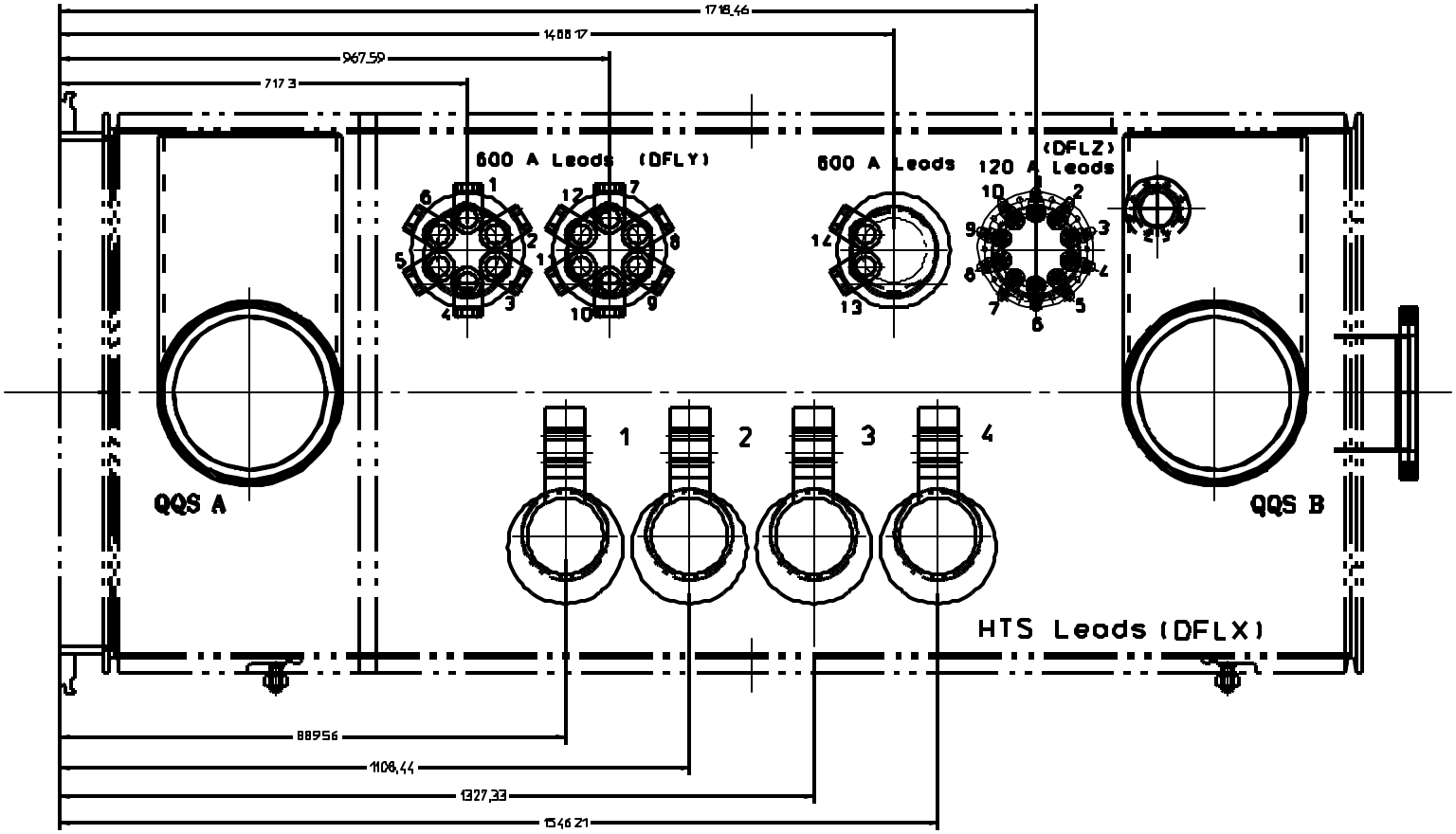

Magnet power schematic and HTS lead designations

IR1, 5

Lead ID	DFBX A	DFBX B	DFBX E	DFBX F
DFLX1	RTQX2.L1	RTQX2.R1	RTQX2.L5	RTQX2.R5
DFLX2	RTQX2.L1	RTQX2.R1	RTQX2.L5	RTQX2.R5
DFLX3	RQX.L1	RQX.R1	RQX.L5	RQX.R5
DFLX4	RQX.L1	RQX.R1	RQX.L5	RQX.R5

IR1, 5

Magnet power schematic and 600 A lead designations

Lead ID	DFBX A	DFBX B	DFBX E	DFBX F
DFLY1	RQSX3.L1	RQSX3.R1	RQSX3.L5	RQSX3.R5
DFLY2	RQSX3.L1	RQSX3.R1	RQSX3.L5	RQSX3.R5
DFLY3	RCBXH3.L1	RCBXH3.R1	RCBXH3.L5	RCBXH3.R5
DFLY4	RCBXH3.L1	RCBXH3.R1	RCBXH3.L5	RCBXH3.R5
DFLY5	RCBXV3.L1	RCBXV3.R1	RCBXV3.L5	RCBXV3.R5
DFLY6	RCBXV3.L1	RCBXV3.R1	RCBXV3.L5	RCBXV3.R5
DFLY7	RCBXH2.L1	RCBXH2.R1	RCBXH2.L5	RCBXH2.R5
DFLY8	RCBXH2.L1	RCBXH2.R1	RCBXH2.L5	RCBXH2.R5
DFLY9	RCBXV2.L1	RCBXV2.R1	RCBXV2.L5	RCBXV2.R5
DFLY10	RCBXV2.L1	RCBXV2.R1	RCBXV2.L5	RCBXV2.R5
DFLY11	RCBXH1.L1	RCBXH1.R1	RCBXH1.L5	RCBXH1.R5
DFLY12	RCBXH1.L1	RCBXH1.R1	RCBXH1.L5	RCBXH1.R5
DFLY13	RCBXV1.L1	RCBXV1.R1	RCBXV1.L5	RCBXV1.R5
DFLY14	RCBXV1.L1	RCBXV1.R1	RCBXV1.L5	RCBXV1.R5

Magnet power schematic and 120 A lea designations

IR1, 5

Lead ID	DFBX A	DFBX B	DFBX E	DFBX F
DFLZ1	RCTX3.L1	RCTX3.R1	RCTX3.L5	RCTX3.R5
DFLZ2	RCTX3.L1	RCTX3.R1	RCTX3.L5	RCTX3.R5
DFLZ3	RCSX3.L1	RCSX3.R1	RCXS3.L5	RCSX3.R5
DFLZ4	RCSX3.L1	RCSX3.R1	RCXS3.L5	RCSX3.R5
DFLZ5	RCSSX3.L1	RCSSX3.R1	RCSSX3.L5	RCSSX3.R5
DFLZ6	RCSSX3.L1	RCSSX3.R1	RCSSX3.L5	RCSSX3.R5
DFLZ7	RCOSX3.L1	RCOSX3.R1	RCOSX3.L5	RCOSX3.R5
DFLZ8	RCOSX3.L1	RCOSX3.R1	RCOSX3.L5	RCOSX3.R5
DFLZ9	RCOX3.L1	RCOX3.R1	RCOX3.L5	RCOX3.R5
DFLZ10	RCOX3.L1	RCOX3.R1	RCOX3.L5	RCOX3.R5

Electrical Signals

Top view of DFBX and feedthrough locations

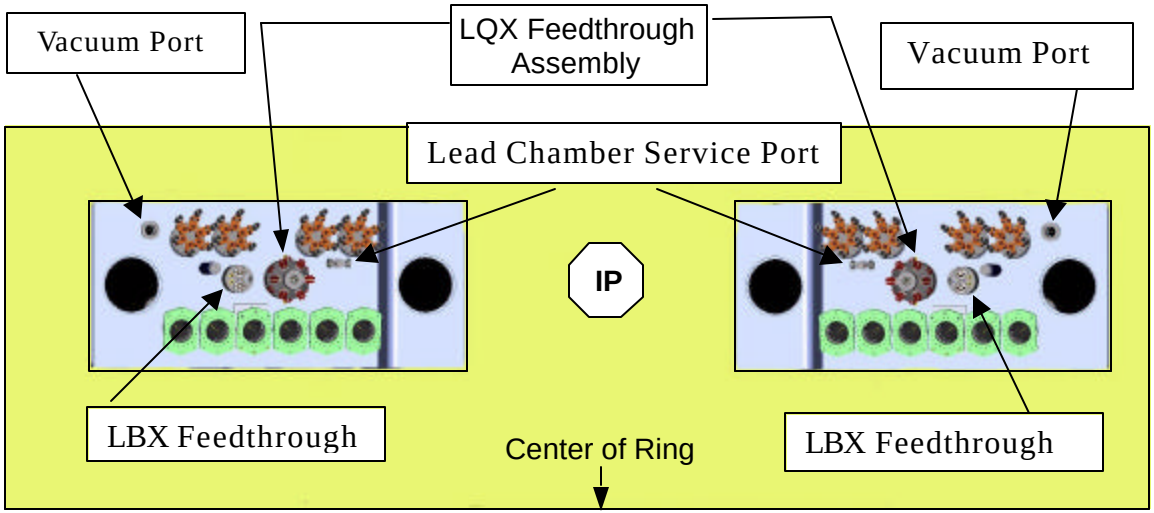

Details of signal feedthrough locations and wire/lead designations for IR1,5

Table No.	Signal	No. Wires	Table No.	Signal	No. Wires
4.1.1.1-1	LQX Main magnet voltage taps	24	4.1.2.2-1	DFLX Thermometers	3 x 4 x 4
4.1.1.1-2	LQX Corrector magnet voltage taps	12	4.1.3-1	DFLY Voltage taps	14 x 3
4.1.1.2-1	LQX Heater connections	32	4.1.4-1	DFLZ Voltage taps	10 x 3
4.1.1.3-1	LQX Thermometers	8	4.1.5.1-1	Lead chamber	4 x 4
4.1.2.1-1	DFLX Voltage taps	(6 x 2) x 4	----	Cryogenic piping signals	< 32

Details of signal feedthrough locations and wire/lead designations, IR2, 8

Table No.	**Signal**	**No. Wires**
4.1.1.1-1, 2 4.1.1.2-1, 4.1.1.3-1 4.1.3-1, 4.1.4-1 4.1.5.1-1	LQX: same as itemized on previous slide.	24, 12 32, 8 14 x 3, 10 x 3 4 x 4
4.1.2.1-1	DFLX Voltage taps	(6 x 2) x 6
4.1.2.2-1	DFLX Thermometers	3 x 4 x 6
4.2.2.1-1	LBX Voltage taps	6
4.2.2.2-1	LBX Heaters	4
4.2.2.3-1	LBX Thermometers	2 x 4 2 x 4

Electrical connector and instrumentation listing

Major Assembly	Item	Quan[a].	Description	Resp.
LQX Signals sections 4.1.1 & 4.2.1	12 kV air-side plug for voltage taps and heaters, Ceramaseal 14419-01-A	672	Push on plug, silicone rubber insulation with 1.2 m length of 12 AWG copper cable	LBNL
	1 kV air-side plug for low voltage sensors, Ceramaseal 16060-05-A	8	MS-style plug, 32 pin, crimp connection, PEEK? Insulation	LBNL
	VCR Blind Female Nut, P/N SS-8-VCR-1-BL	16	Used to cap the male VCR connector (installed)	LBNL
	Gasket for Cajon connector, P/N CU-8-VCR-2-GR	32	Copper gasket with retaining ring (not installed)	LBNL
	VCR Female Nut, P/N SS-8-VCR-1	64	Needed to make connection to CERN pressure sensor (not installed)	LBNL
	VCR Gland, P/N SS-8-VCR-3	32	Needed to make connection to CERN pressure sensor (not installed)	LBNL
DFLX Signals, sections 4.1.2 & 4.2.3	Air-side plug for voltage taps, Fischer S 104 A065	80	6-pin plug, solder connection, PEEK insulation	LBNL
	Air-side plug for Pt RTD's, Fischer S 104 Z086	40	16-pin plug, solder connection, PEEK insulation	LBNL
DFLY Signals, sections 4.1.3 & 4.2.4	Air-side plug for voltage taps, Fischer S 107 A051	24	27-pin plug, solder connection, PEEK insulation	LBNL
DFLZ Signals, sections 4.1.4 & 4.2.5	Air-side plug for voltage taps, Fischer S 107 A052	8	40-pin plug, solder connection, PEEK insulation	LBNL

[a]Quanity refers to the total required for all 8 DFBX.

Electrical connector and instrumentation listing (2)

Major Assembly	Item	Quan.[a]	Description	Resp.
LBX Signals section 4.2.2	12 kV air-side plug plug for voltage taps and heaters, Ceramaseal 14419-01-A	56	Push on plug, silicone rubber insulation with 1.2 m length of 12 AWG copper cable	LBNL
	1 kV air-side plug for low voltage sensors, Ceramaseal 16060-04-A	4	MS-style plug, 19 pin, crimp connection, PEEK? insulation	LBNL
	VCR Blind Female Nut, P/N SS-8-VCR-1-BL	8	Used to cap the male VCR connector (installed)	LBNL
	Gasket for Cajon connector, P/N CU-8-VCR-2-GR	32	Copper gasket with retaining ring (not installed)	LBNL
	VCR Female Nut, P/N SS-8-VCR-1	16	Needed to make connection to CERN pressure sensor (not installed)	LBNL
	VCR Gland, P/N SS-8-VCR-3	16	Needed to make connection to CERN pressure sensor (not installed)	LBNL
DFBX Signals, sections 4.1.5 & 4.2.6	Air-side plug for Liquid Helium Chamber Signals, Fischer S 104 Z086	8	16-pin plug, solder connection, PEEK insulation	LBNL
	VCR Blind Female Nut, P/N SS-8-VCR-1-BL	16	Used to cap the male VCR connector (installed)	LBNL
	Gasket for Cajon connector, P/N CU-8-VCR-2-GR	64	Copper gasket with retaining ring (not installed)	LBNL
	VCR Female Nut, P/N SS-8-VCR-1	32	Needed to make connection to CERN pressure sensor (not installed)	LBNL
	VCR Gland, P/N SS-8-VCR-3	32	Needed to make connection to CERN pressure sensor (not installed)	LBNL
	Air-side plug for Cryogenic Piping Signals, Ceramaseal 16060-05-A	8	MS-style plug, 32 pin, crimp connection, PEEK? insulation	LBNL

[a]Quantity refers to the total required for all 8 DFBX.

DFBX - Tunnel and Alignment

DFBX shipping configuration

- Supported on jacks mounted to crate with additional tie downs to constrain all degrees of freedom.
- All brackets for installation included.
- Shipping fixtures to support/constrain current leads and piping at end-flanges as needed.
- Crate instrumented with mechanical shipping load indicators.

Maximum allowable transportation loads

Direction	**Acceleration (g-loads)**
Lateral (+/- X)	**< 1**
Vertical (+/- Z)	**< 2**
Axial (+/- Y)	**< 4**

DFBX lifting point locations

- Hoist rings at 4 corners
  - > rated at 2300 kg each; 6.9 Tonnes total assuming 3 rings take the load.
  - > DFBX total mass is estimated at 3.2 Tonnes
  - > mounted to welded boss
- Spreader bar fixture for lifting to be provided, if necessary

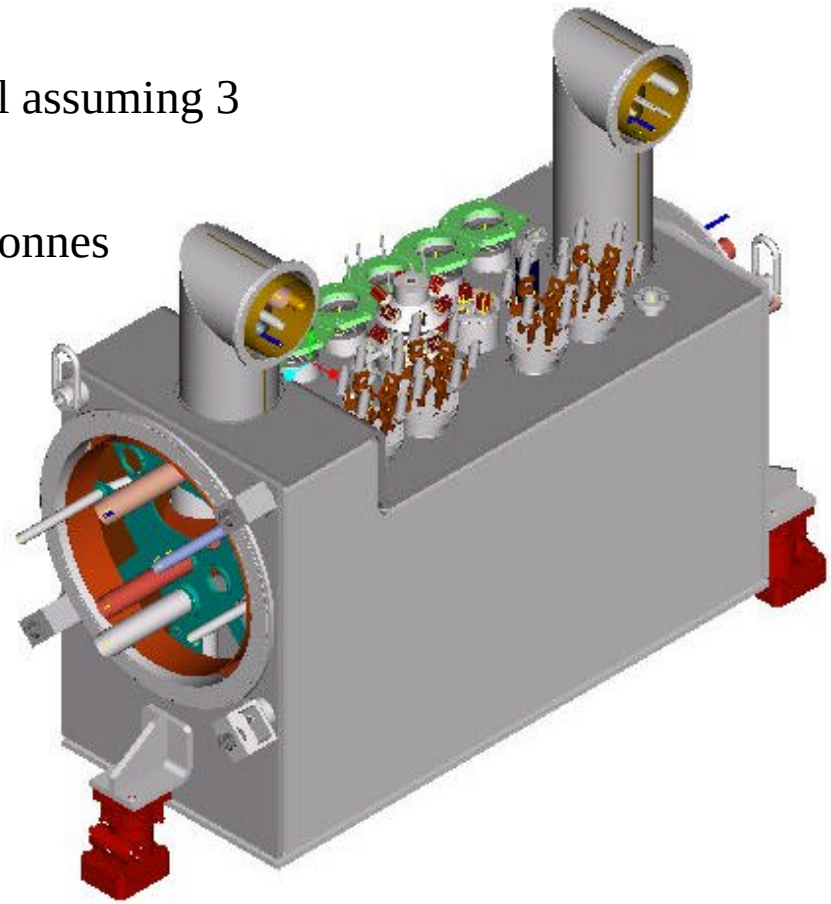

Transport and installation of DFBX

- Uncrate, lift with overhead crane onto transport cart
  - > Due to height of HTS leads, DFBX may require special cart or wheels mounted directly to box if taken through small diam. tunnel, (TI2).
- Install support jack bases and move DFBX into place using special collapsible cart.

Duff -Norton support jack locations

- Floor loads estimated to be about 1 Tonne at each jack (static vertical)

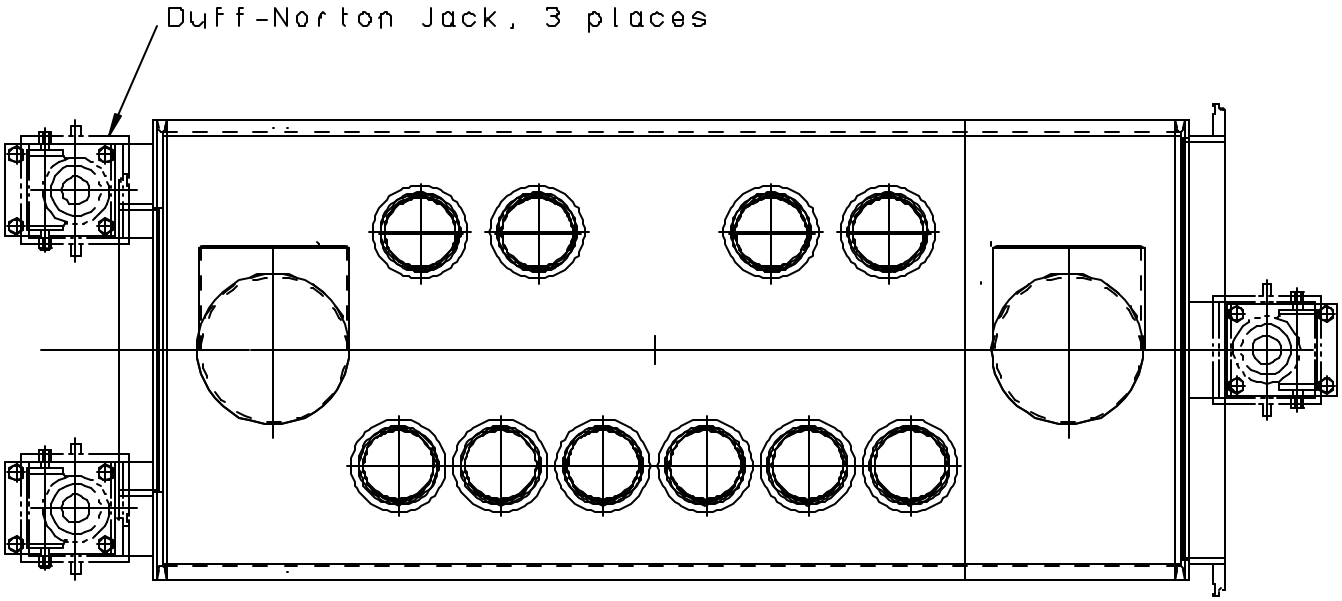

Fiducial fixture locations

Alignment requirements: +/- 0.5 mm in X, Z; +/- 1.0 mm in Y

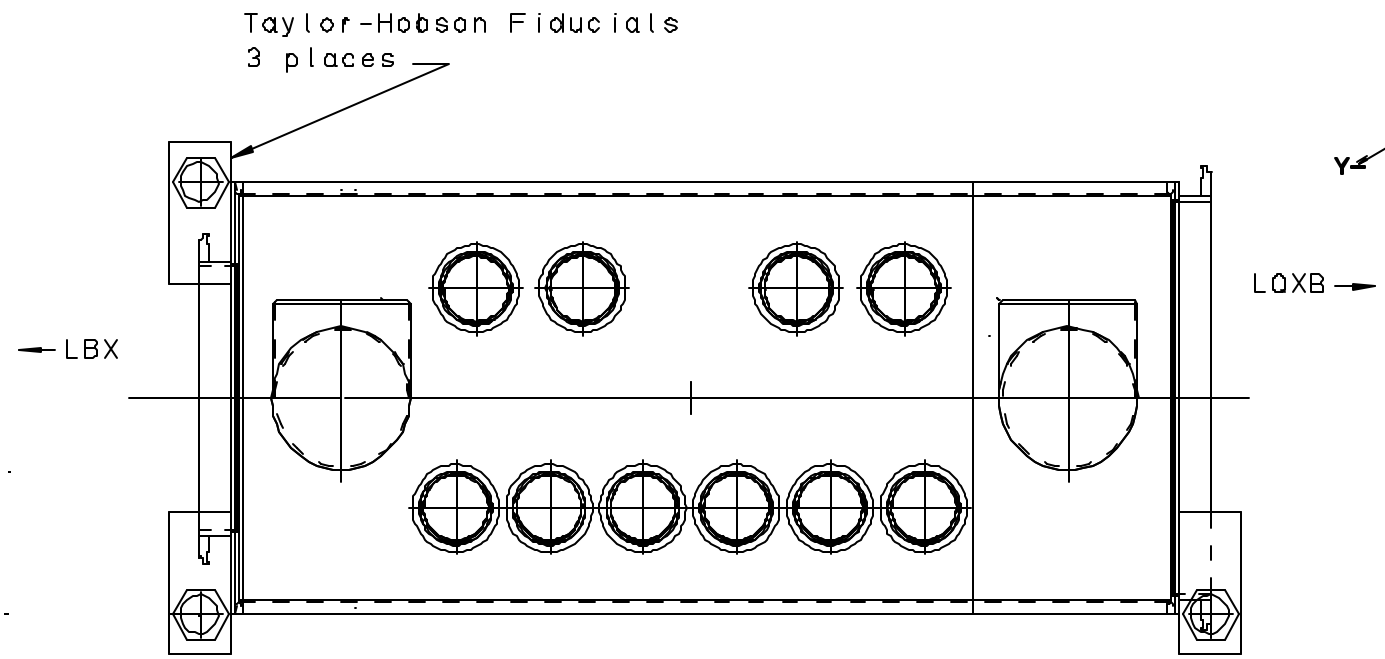

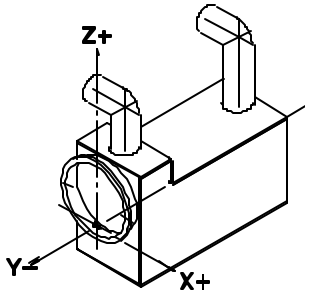

Bumper bracket placement

- Will be sized to withstand potential moment load at floor due to LQXB over-pressure (catastrophic condition ~ 14000 lb. thrust load from Q3 side).

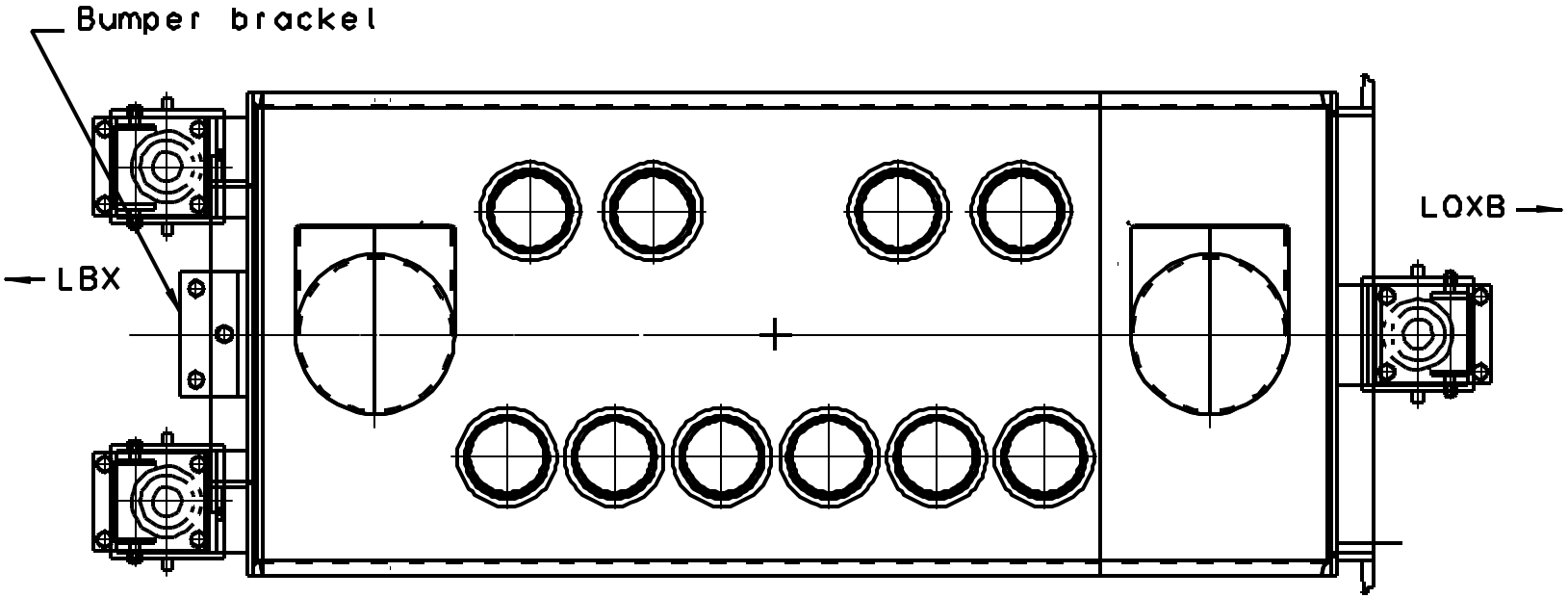

Tie rod locations

- Four tie rods (M30) attached to brackets around flange on Q3 side connect DFBX to LQXB to react potential overpressure load.

- Brackets mount to lifting bosses.

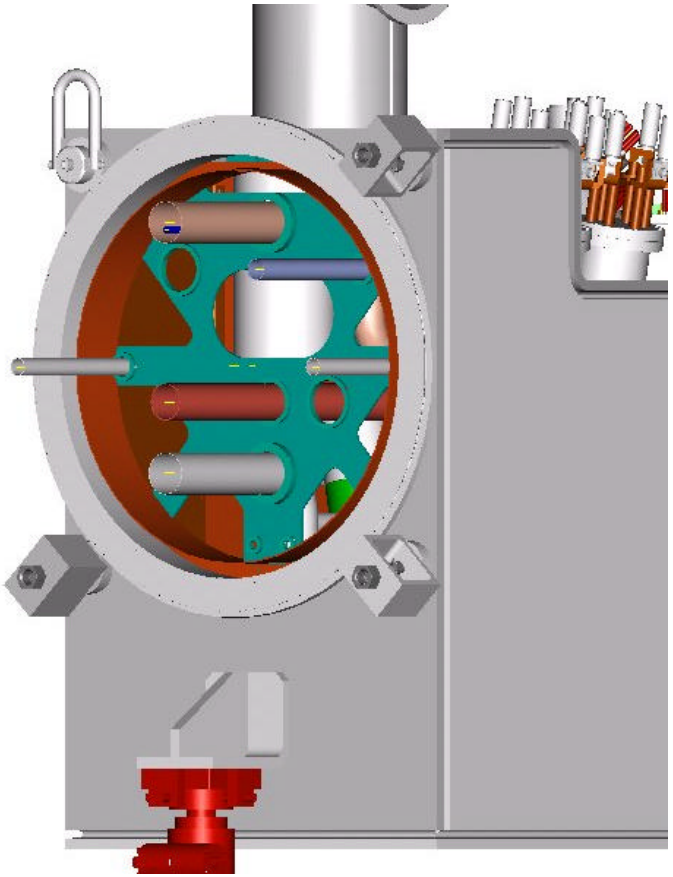

Interconnects

- LQXB, LBX and QRL interconnections may be made once DFBX has been aligned and bumper bracket and tie rods attached.

- Reference specifications: ES210, ES230 and ES240.