US LHC ACCELERATOR PROJECT

*brookhaven - fermilab - **berkeley***

DFBX Interface Specification Overview

Jon Zbasnik

LBNL

DFBX -EDR

14 Mar. 2001

CERN

Contents of Presentation

- ...ES-0240 (Connection to CERN QRL)
- ...ES-0220 (Connection to CERN Beam Tube & Screen)
- ...ES-0280 (Connection to CERN GHe Recovery)

…ES-240 (Connection to QRL)

- Interface pipe sizes are defined by CERN

Table 4.2-1. Cryogenic Piping for DFBXA, DFBXB, DFBXE, and DFBXF

Pipe	Function	Interface[a] Pipe ID (mm)	DFBX Pipe ID (mm)
CC'1	Lead Box Supply	10	13.4
CC'2	TAS & VSS[b] Supply	10	13.4
CC'3	TAS & VSS[b] Return	10	13.4
CY1	MQX 1.9 K Liquid Supply	10	13.4
DH	20 K Lead Supply, Lead Box Return	20	22.1
E1	Thermal Shield Supply	15	34.8
E2	Thermal Shield Return	15	34.8
LD1	Cooldown & Fill Supply, Safety Relief	40	42
LD2	Cooldown & Fill Return, Safety Relief	40	42
XB	1.9 K Gaseous Return	70	85.6

Notes: a. From http://vanweeld.home.cern.ch/vanweeld/insertions/piping/jumperpiping.html;
b. VSS in DFBX Bore Tube

Table 4.2-2. Cryogenic Piping for DFBXC, DFBXD, DFBXG, and DFBXH

Pipe	Function	Interface[a] Pipe ID (mm)	DFBX Pipe ID (mm)
CC'1	Lead Box Supply	10	13.4
CC'2	VSS[b] Supply	10	13.4
CC'3	VSS[b] Return	10	13.4
CY1	MQX 1.9 K Liquid Supply	10	13.4
CY2	MBX 1.9 K Liquid Supply	10	13.4
DH	20 K Lead Supply, Lead Box Return	20	22.1
E1	Thermal Shield Supply	15	34.8
E2	Thermal Shield Return	15	34.8
LD1	Cooldown & Fill Supply, Safety Relief	40	42
LD2	Cooldown & Fill Return, Safety Relief	40	42
LD3	Safety Relief	40	42
XB	1.9 K Gaseous Return	60	59.3

Notes: a. From http://vanweeld.home.cern.ch/vanweeld/insertions/piping/jumperpiping.html;
b. VSS in both D1 and DFBX Bore Tubes

…ES-240 (Connection to QRL)

- Agreement reached on locations of pipes in jumpers - IP1 & 5

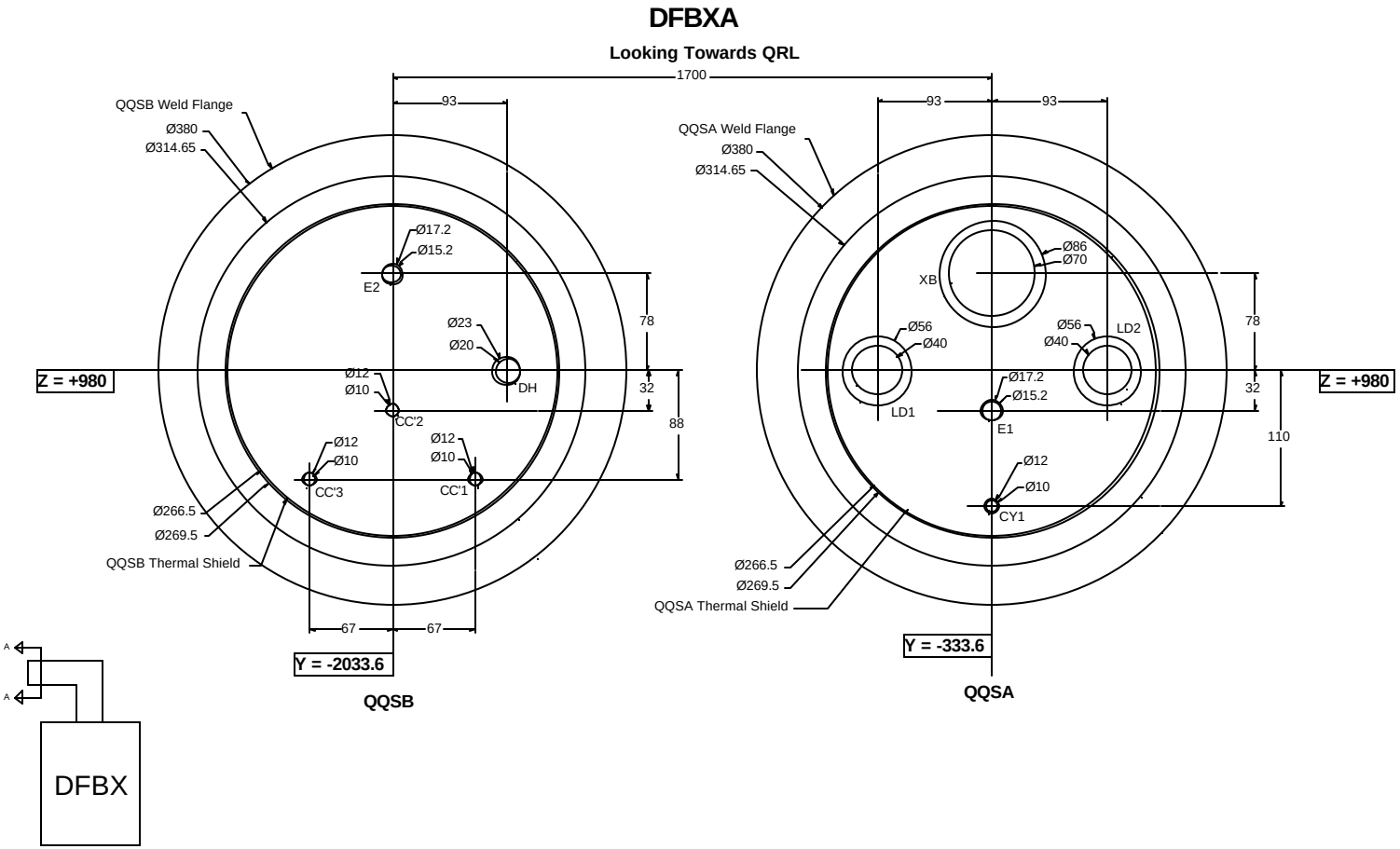

…ES-240 (Connection to QRL)

- Agreement reached on locations of pipes in jumpers - IP2 & 8

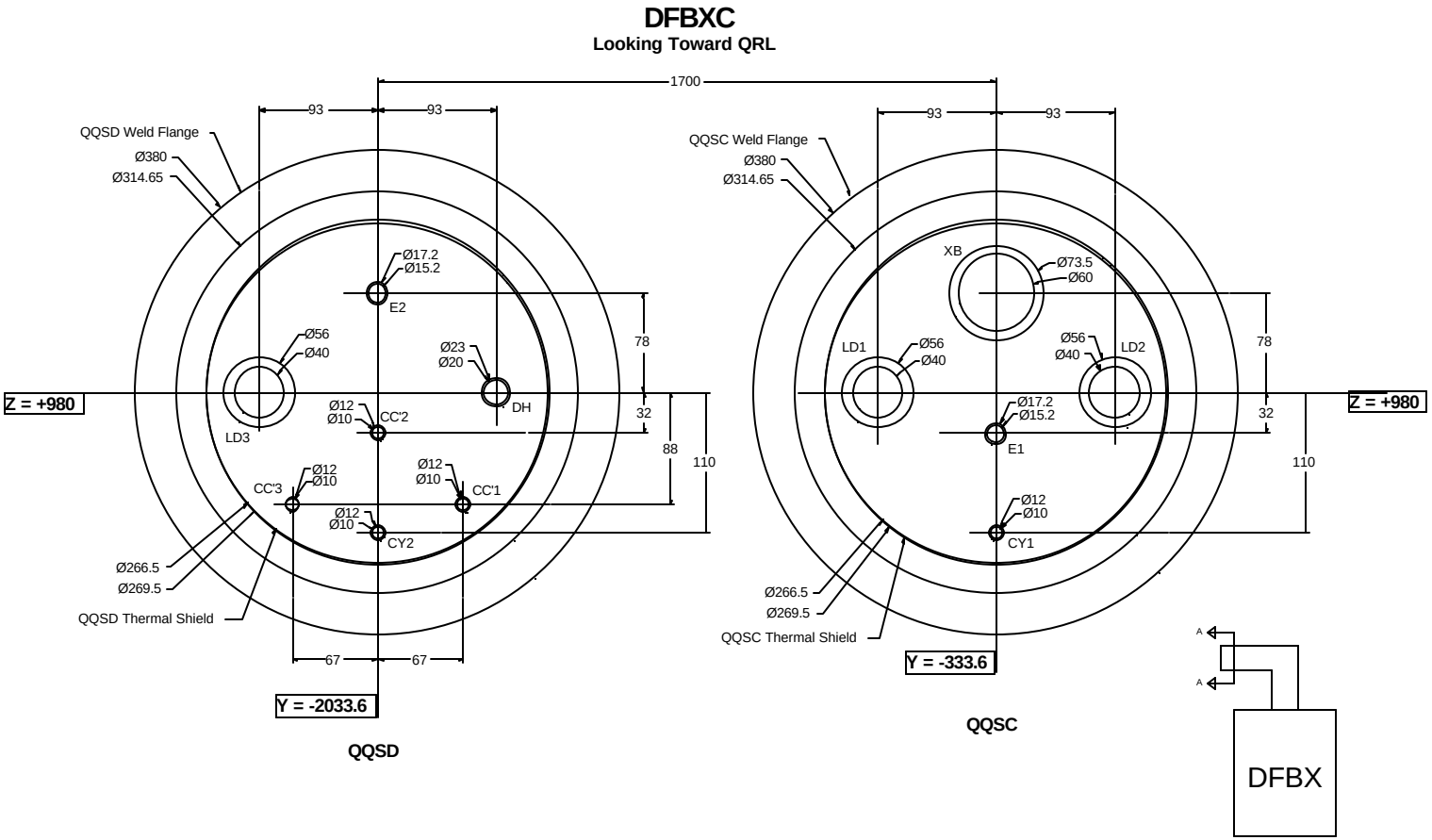

…ES-240 (Connection to QRL)

- Interface Coordinates for every jumper are listed
- Interconnection features are also listed
- DFBXC shown here

	Pipe	X	Y	Z	Interconnection Figure
QQSC	XB	-301	-333.6	1058	5.4.1-2
	LD1	-301	-426.6	980	5.4.1-3
	LD2	-301	-240.6	980	5.4.1-3
	E1	-367	-333.6	948	5.4.1-4
	CY1	-367	-333.6	870	5.4.1-6
QQSD	E2	-367	-2033.6	1058	5.4.1-4
	DH	-367	-1940.6	980	5.4.1-5
	LD3	-301	-2126.6	980	5.4.1-3
	CY2	-367	-2033.6	870	5.4.1-6
	CC'1	-367	-1966.6	892	5.4.1-6
	CC'2	-367	-2033.6	948	5.4.1-6
	CC'3	-367	-2100.6	892	5.4.1-6

…ES-240 (Connection to QRL)

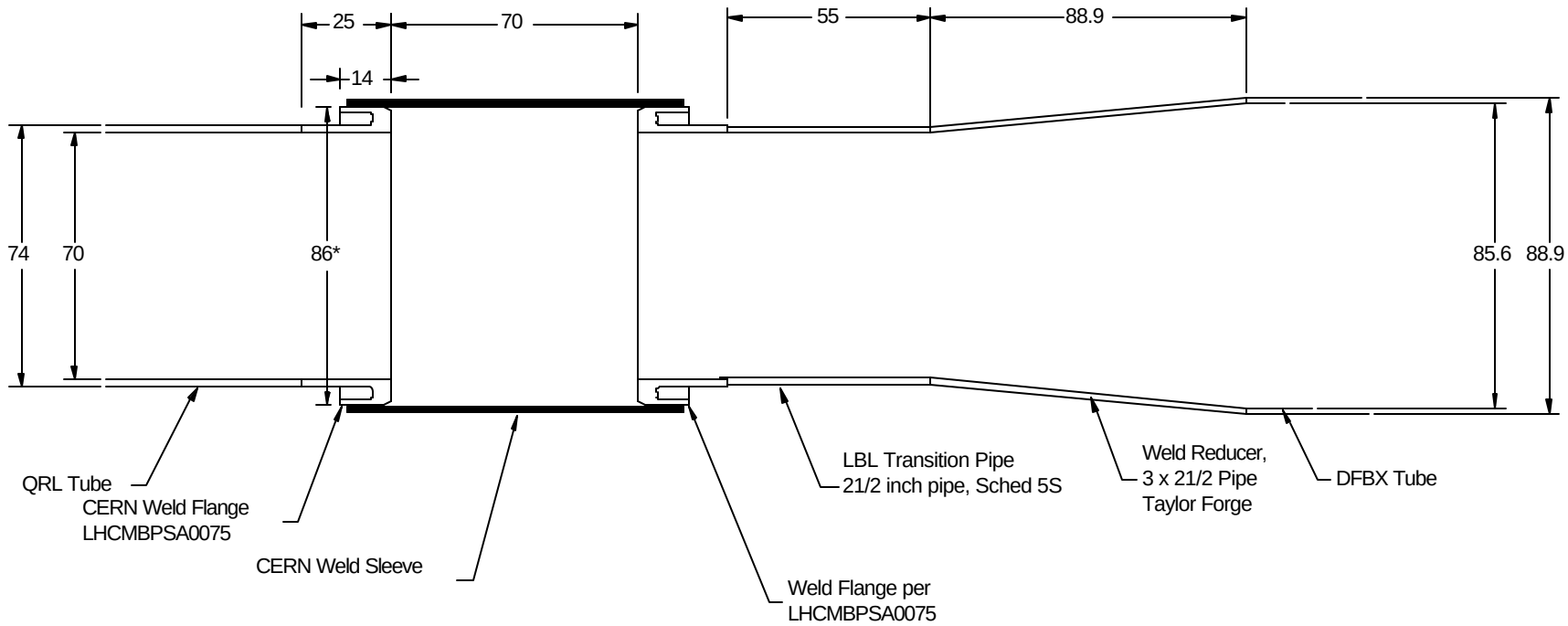

Figure 5.4.1-1. Interconnection of Larger XB line

…ES-240 (Connection to QRL)

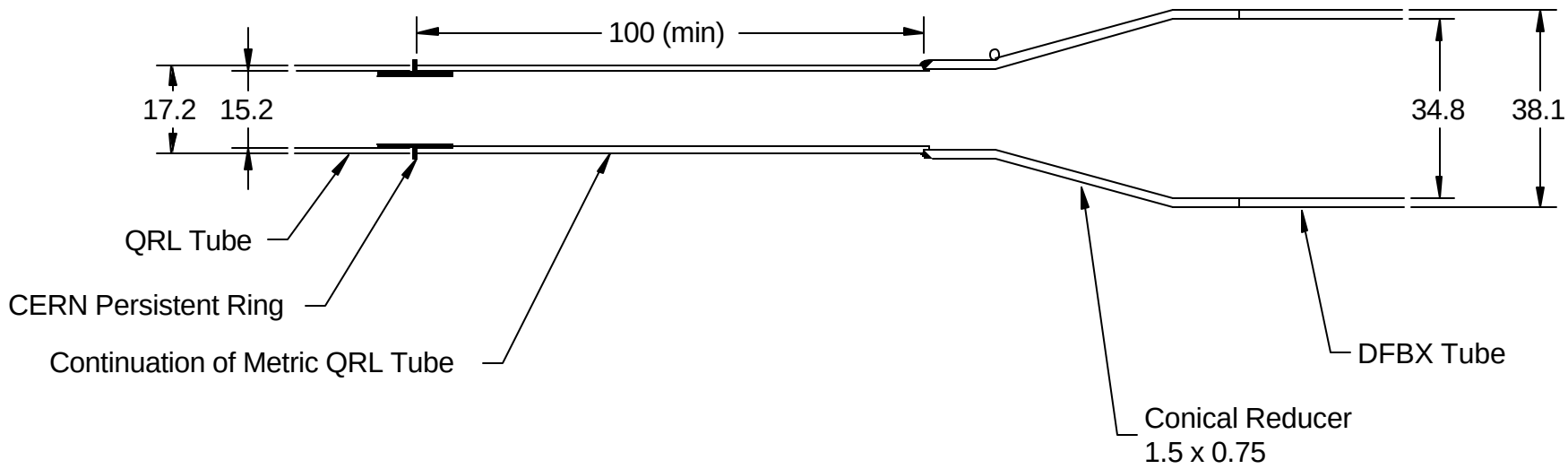

Figure 5.4.1-4. Interconnection of E line

…ES-240 (Connection to QRL)

Table 6-1. Responsibilities for DFBX-QRL Interconnect Components.

Item	QRL Feature		Interconnect Feature		DFBX Feature	
	Description	**Resp.**	**Description**	**Resp.**	**Description**	**Resp.**
Large XB	Flange, 86/70	ACR	Sleeve, 86	CRI	Flange, 86/70	LBNL
Small XB	Flange, 73.5/60	ACR	Sleeve,73.5	CRI	Flange, 73.5/60	LBNL
LD	Flange, 56/40	ACR	Sleeve, 56	CRI	Flange, 56/40	LBNL
E	Tube end, 17.2/15.2	ACR	Ring, 15.2	CRI	Tube end, 17.2/15.2	LBNL
DH	Tube end, 23/20	ACR	Ring, 20	CRI	Tube end, 23/20	LBNL
CY	Tube end, 12/10	ACR	Ring, 10	CRI	Tube end, 12/10	LBNL
Shield	∅ 380 stub	ACR	Shield Bridge	CRI	∅ 269.5 stub	LBNL
MLI	tbd extension	ACR	As Required	CRI	tbd extension	LBNL
Vacuum Shell	Weld Flange, 380/349.2	ACR	Bellows Assembly	ACR	Weld Flange, 380/314.6	LBNL

…ES-220 (Connection to CERN Beam Tube & Screen)

- Proposal to maintain cold bore temp < 3K: provide a jacket of 1.9 K HeII around the bore tube (end flanges not shown)
- Jacket used in all DFBX

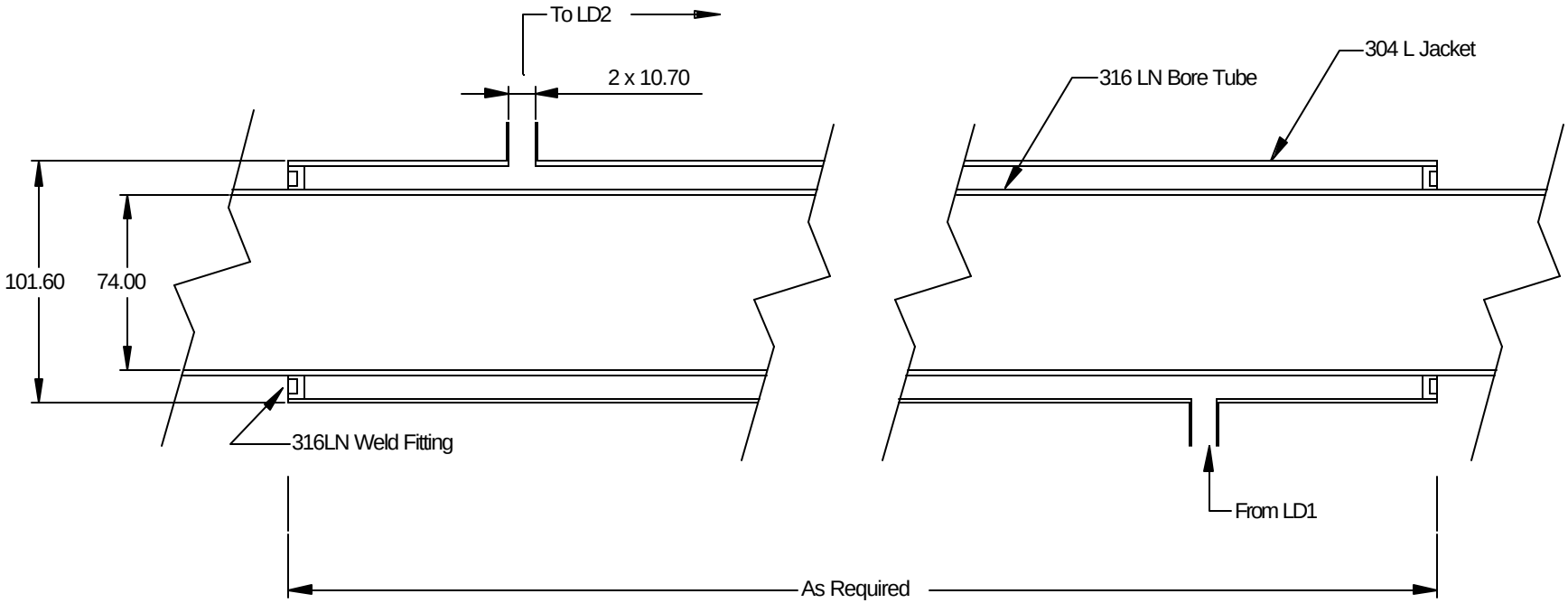

…ES-220 (Connection to CERN Beam Tube & Screen)

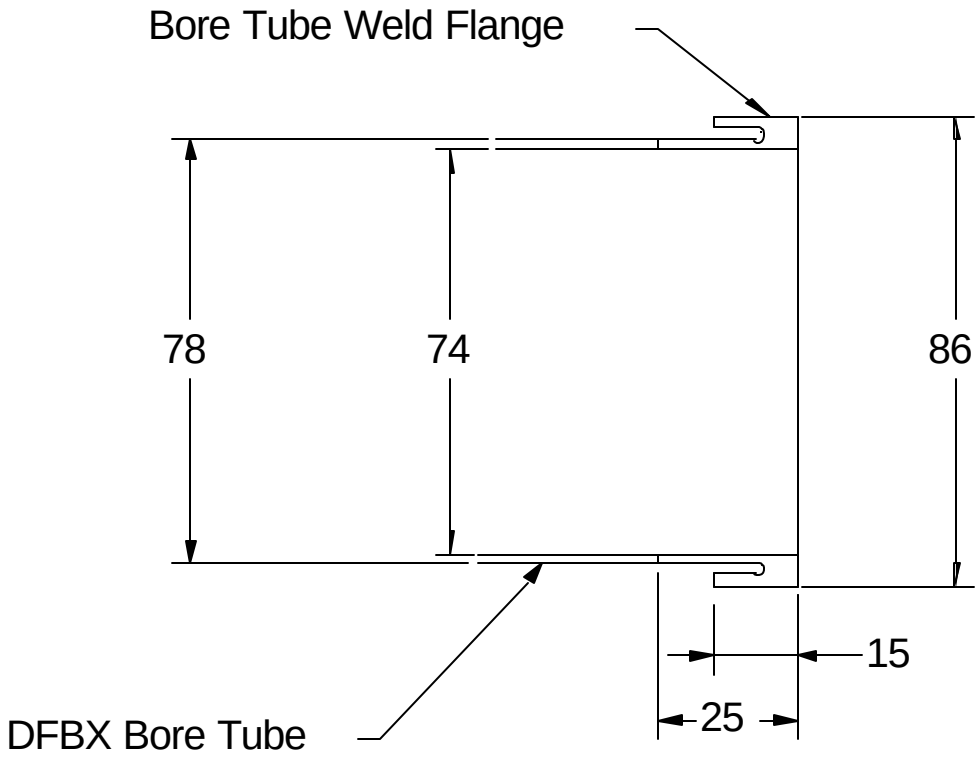

Figure 5.1.1-1. DFBX Bore Tube Weld Flange

…ES-220 (Connection to CERN Beam Tube & Screen)

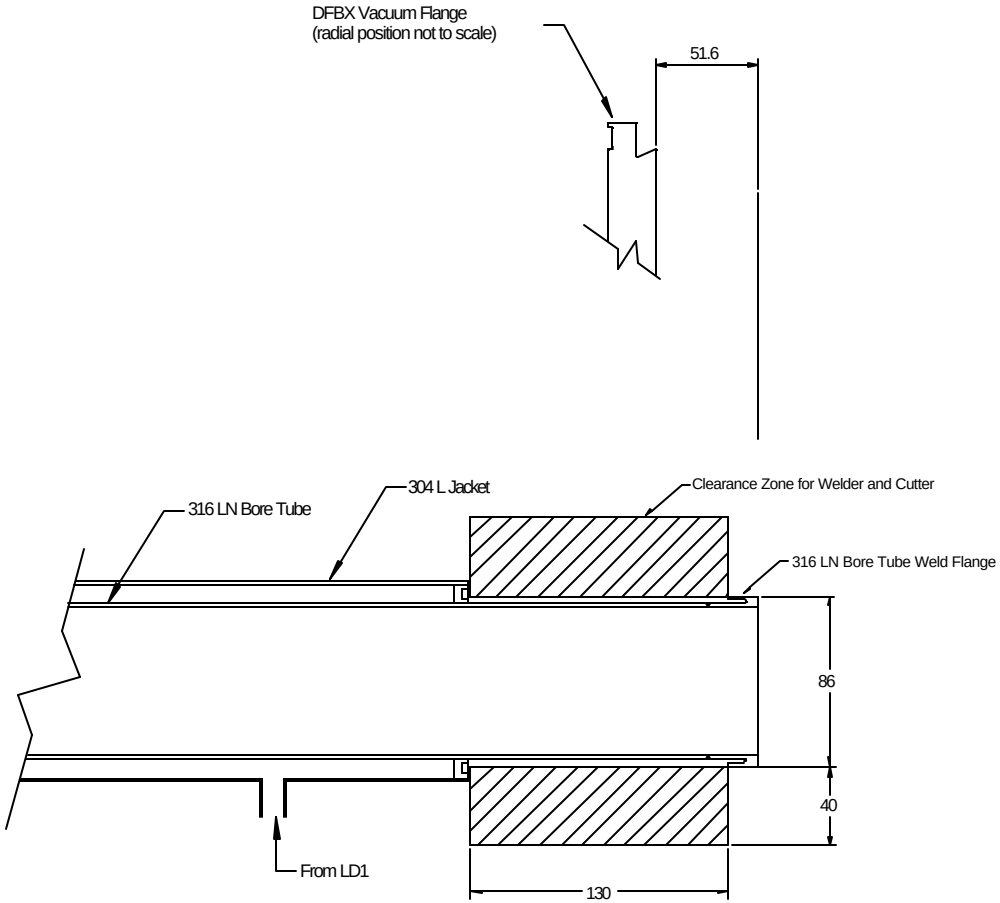

Figure 5.1.1-2. Longitudinal Section of DFBX Cold Bore on Q3 End
(Applicable at all points)

…ES-220 (Connection to CERN Beam Tube & Screen)

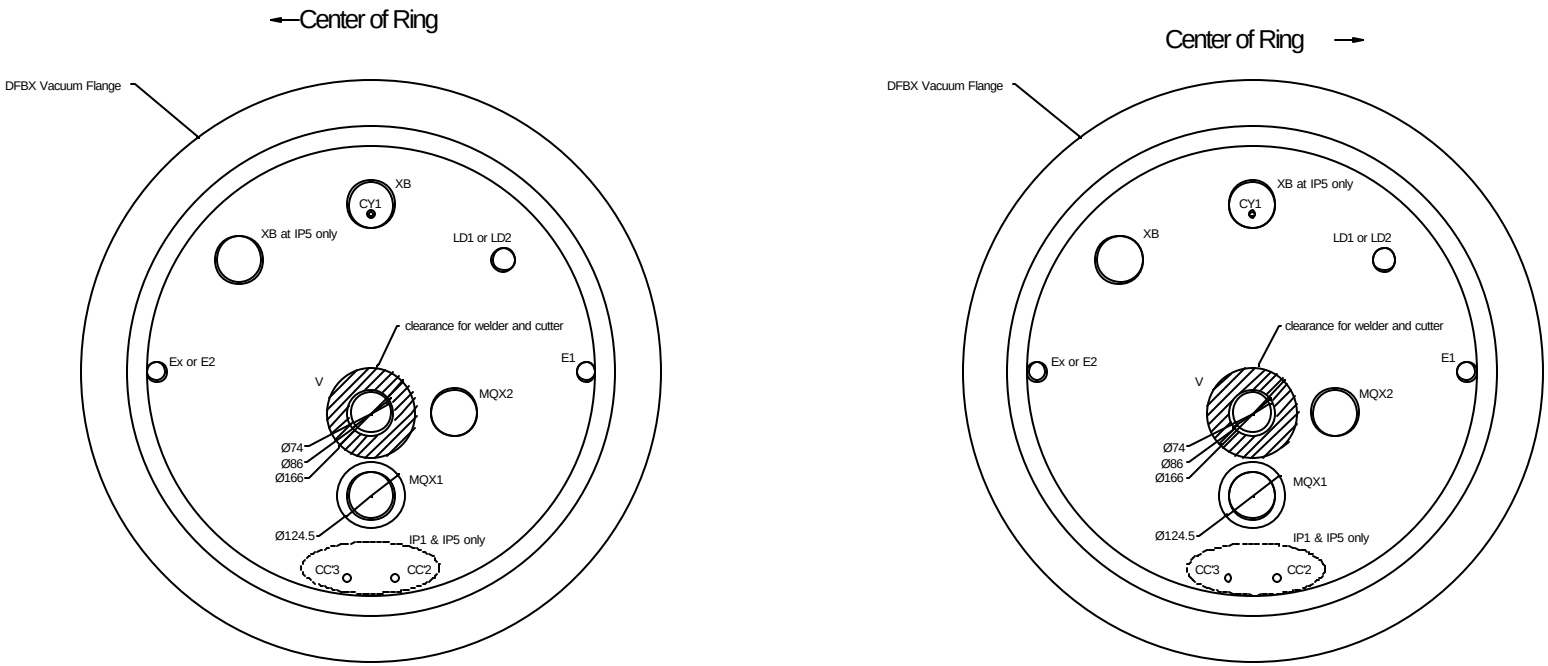

a. Left-Side DFBX

b. Right-Side DFBX

Figure 5.1.1-3. Cross sectional views of the DFBX, looking from Q3 (Applicable at all points)

…ES-220 (Connection to CERN Beam Tube & Screen)

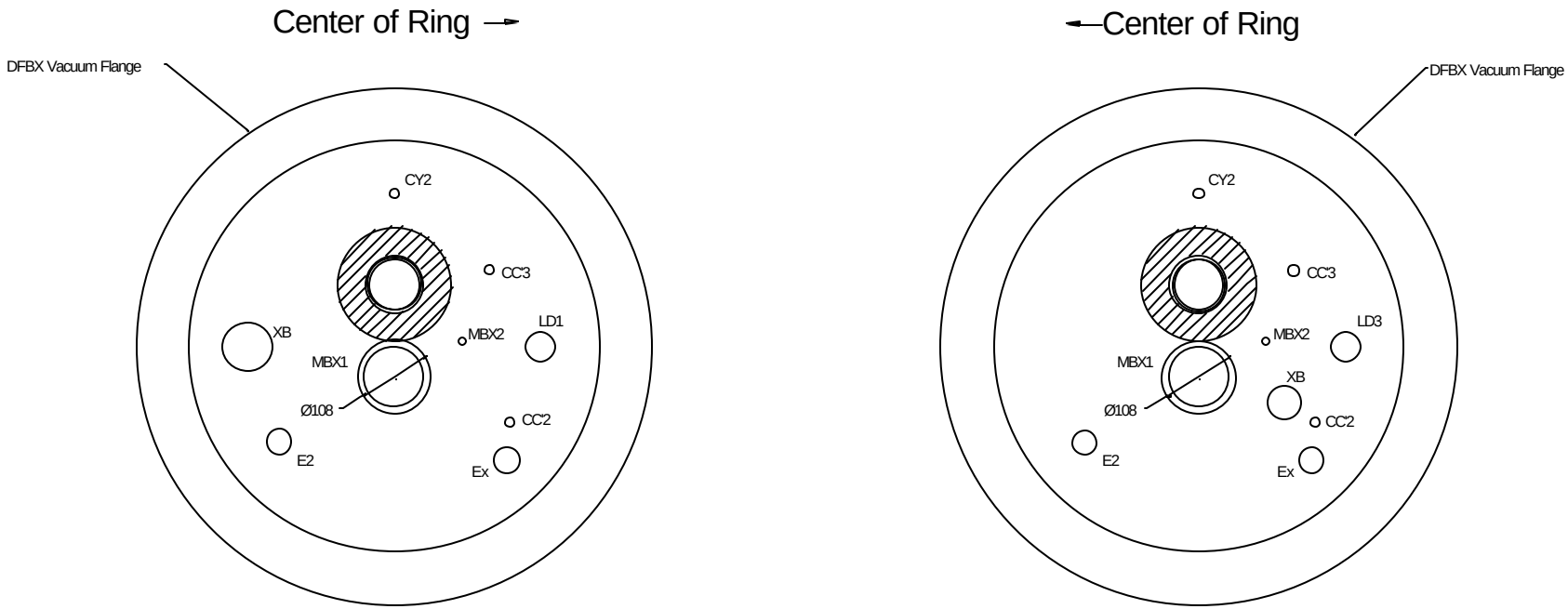

a. Left-Side DFBX, looking downstream from D1

b. Right-Side DFBX, looking upstream from D1

Figure 5.2.2-1. Cross sectional view of DFBX as looking from the D1.
(Applicable at Points 2 & 8)

Clearance ok for MBX1 pipe, but interference with MBX1 bellows

…ES-220 (Connection to CERN Beam Tube & Screen)

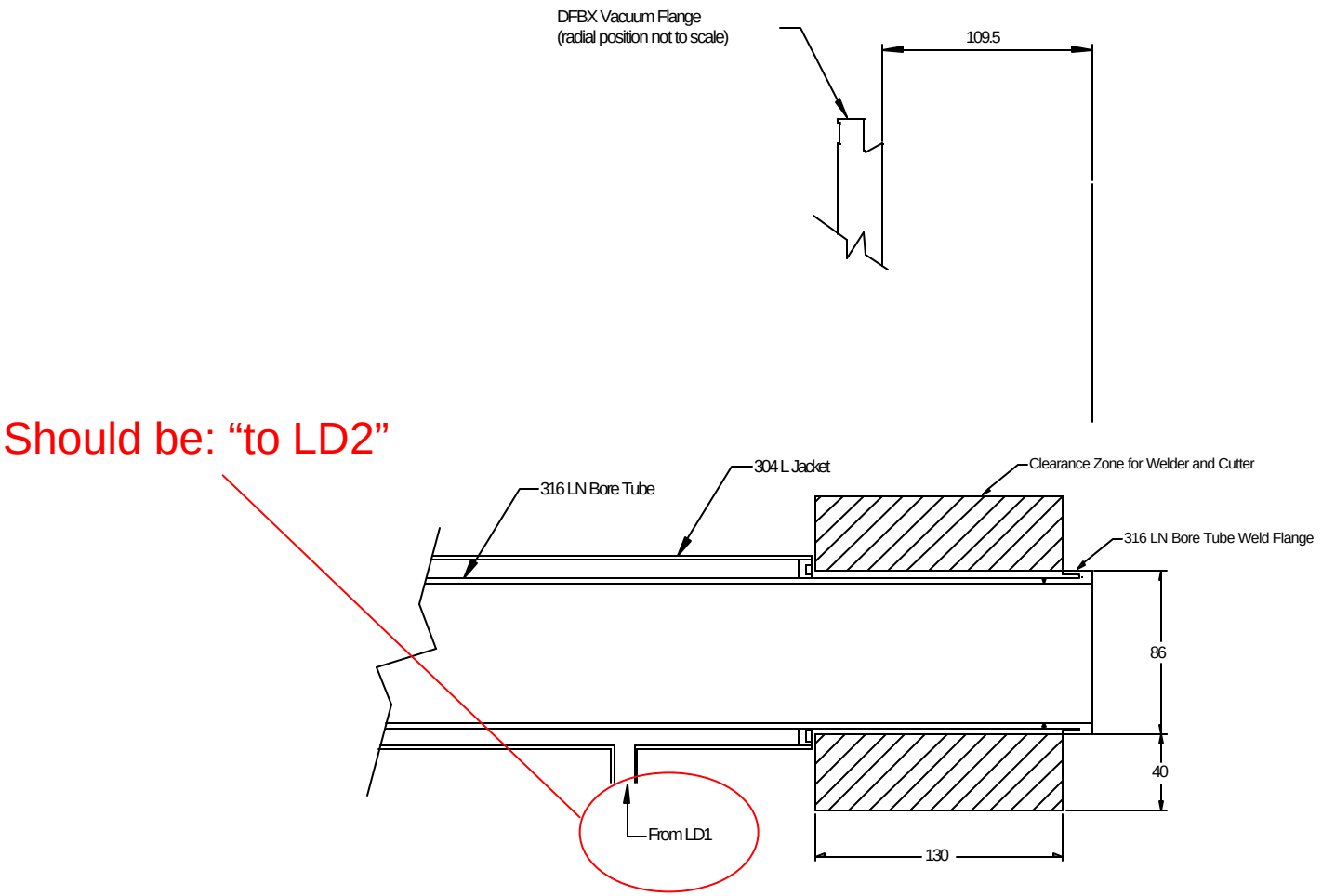

Figure 5.2.2-2. Longitudinal section of the D1 end.

…ES-220 (Connection to CERN Beam Tube & Screen)

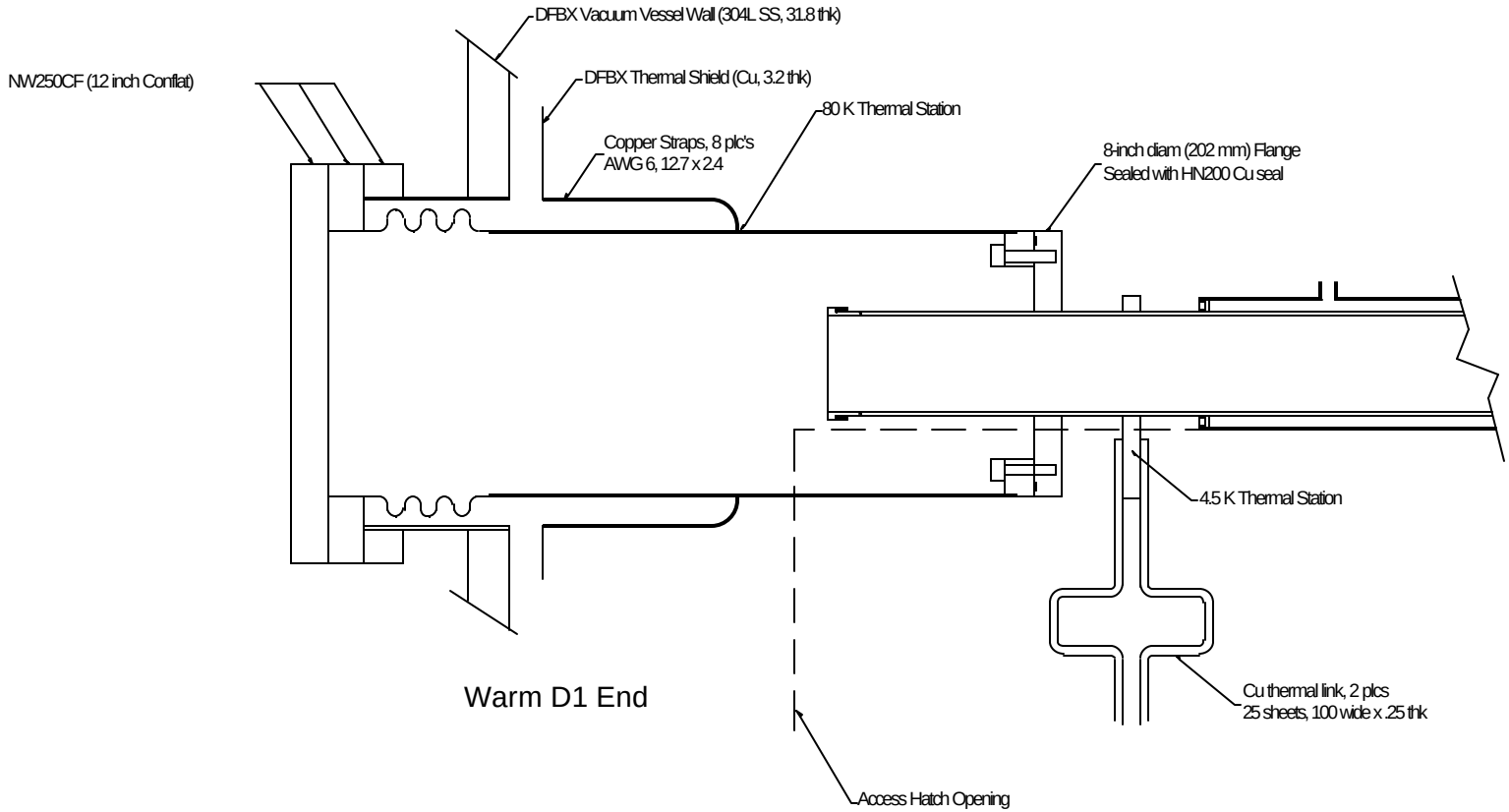

Figure 5.1.2-1. Cross sectional view of the bore tube on the warm D1 end

As tested at LBNL

…ES-220 (Connection to CERN Beam Tube & Screen)

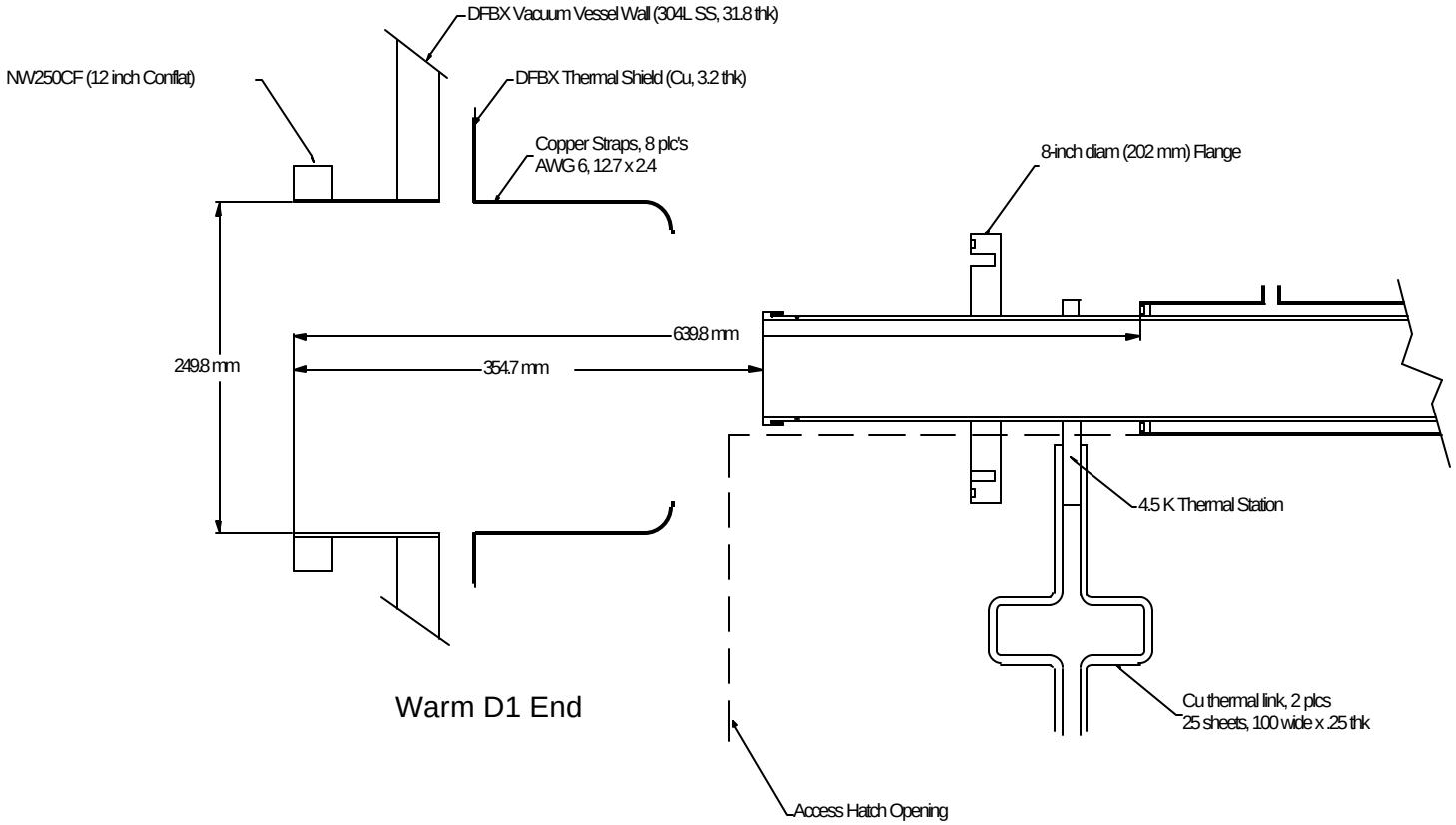

Figure 5.1.2-2. Cross sectional view of the bore tube on the warm D1 end

Ready for insertion of CERN beam tube hardware

…ES-220 (Connection to CERN Beam Tube & Screen)

- Responsibilities in this interface need to be decided.

…ES-280 (Connection to CERN GHe Recovery)

- GHe exits vertically up (± 10º) from the current leads

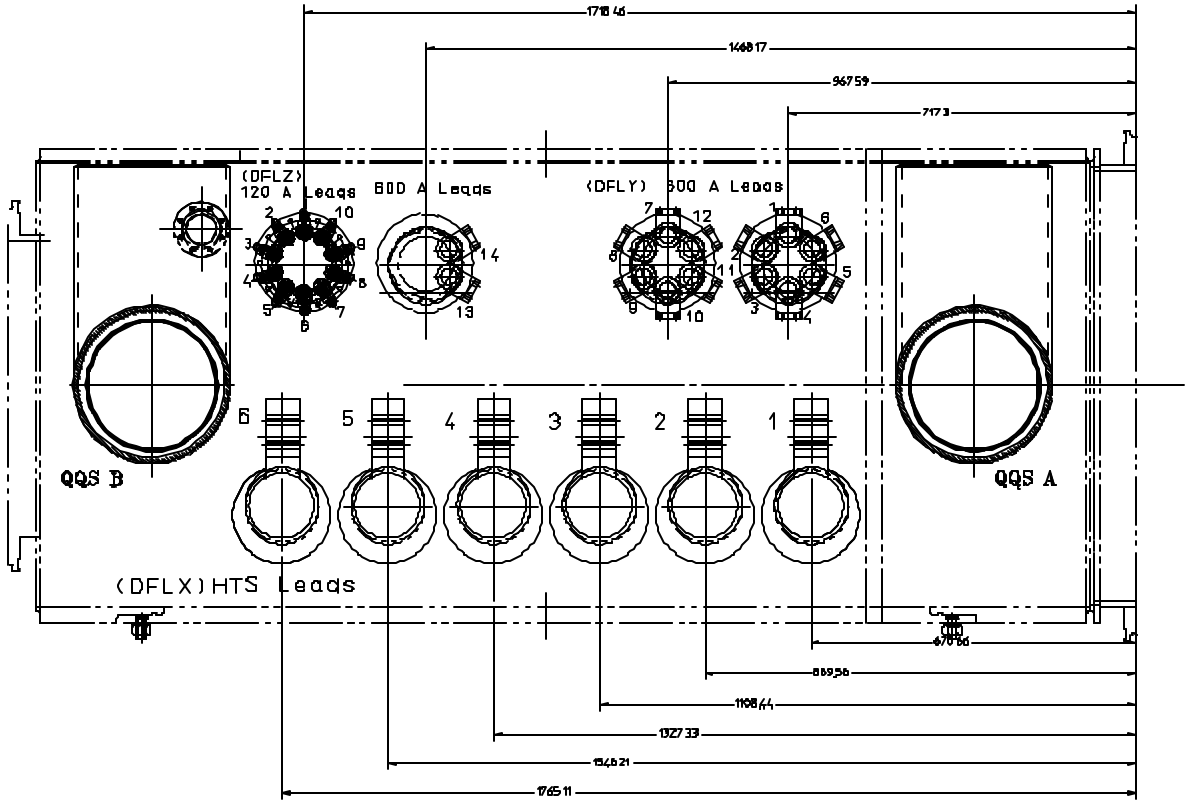

Figure 4.1-1. Plan view schematic of current lead arrangement and designations in DFBX for IP 2 and 8 (left). (Note: 10 degree inclination angle of leads is not shown here.)

…ES-280 (Connection to CERN GHe Recovery)

Table 4.1-1. Current Lead Count

Location	DFBX box	HTS (DFLX)	600 A (DFLY)	120 A (DFLZ)
IP1 & IP5	A, B, E, F	4	14	10
IP2 & IP8	C, D, G, H	6	14	10

- For DFLX, connection is NW35CF at top of each lead
- For DFLY, connection is NW16CF at top of each lead
- For DFLZ, connection is Cajon VCR-4 at top for each pair

…ES-280 (Connection to CERN GHe Recovery)

Table 5.2-1. Flow Control Valves at Each Side of IP1 and IP5

Current Lead Code	Flow Rate, g/ s GHe	Flow Control Sensor	Valve Quantity
DFLX	0 to 0.6	Pt RTD in DFLX	4
DFLY	0 to 0.04	CERN-supplied	14
DFLZ	0 to 0.02	CERN-supplied	5

Table 5.2-2. Flow Control Valves at Each Side of IP2 and IP8

Current Lead Code	Flow Rate, g/ s GHe	Flow Control Sensor	Valve Quantity
DFLX	0 to 0.6	Pt RTD in DFLX	6
DFLY	0 to 0.04	CERN-supplied	14
DFLZ	0 to 0.02	CERN-supplied	5

…ES-280 (Connection to CERN GHe Recovery)

Major Assembly	Item	Quan[a].	Description	Resp.
DFLX Current Leads	Rotatable NW35CF, on electrical isolator	40	2.75 inch Rotatable Conflat Flange	LBNL
	NW35CF Blank Flange with Soft copper gasket	40	Installed on DFLX for Shipping	LBNL
	Vent Line terminating in NW35CF with copper gasket	40	Connection to flow control valves	CERN
DFLY Current Leads	Rotatable NW16CF, on electrical isolator	112	1.33 inch Rotatable Conflat Flange	LBNL
	NW16CF Blank Flange with Soft copper gasket	112	Installed on DFLY for Shipping	LBNL
	Vent Line terminating in NW16CF with copper gasket	112	Connection to flow control valves	CERN
DFLZ Current Leads	Male VCR (size 4) on electrical isolator	80	Gas outlet port	LBNL
	Cajon SS-4-VCR-CP (cap) with soft copper gasket	80	Installed on DFLZ for Shipping	LBNL
	LHC Connection set: Cajon 316L-4-VCR-3S-6MBT7, Cajon SS-4-VCR-1, and Cajon CU-4-VCR-2-GR	120	Gland, nut, and gasket to allow butt welded connection to 6 mm od stainless tube. 50% spares	LBNL
	6 mm od tube	As req'd	Connection to flow control valves	CERN

a. Total for all 8 DFBX