LQX Engineering Design Review

Introduction

Jim Kerby

12 March 2001

- Scope
- Requirements
- Interfaces

Scope

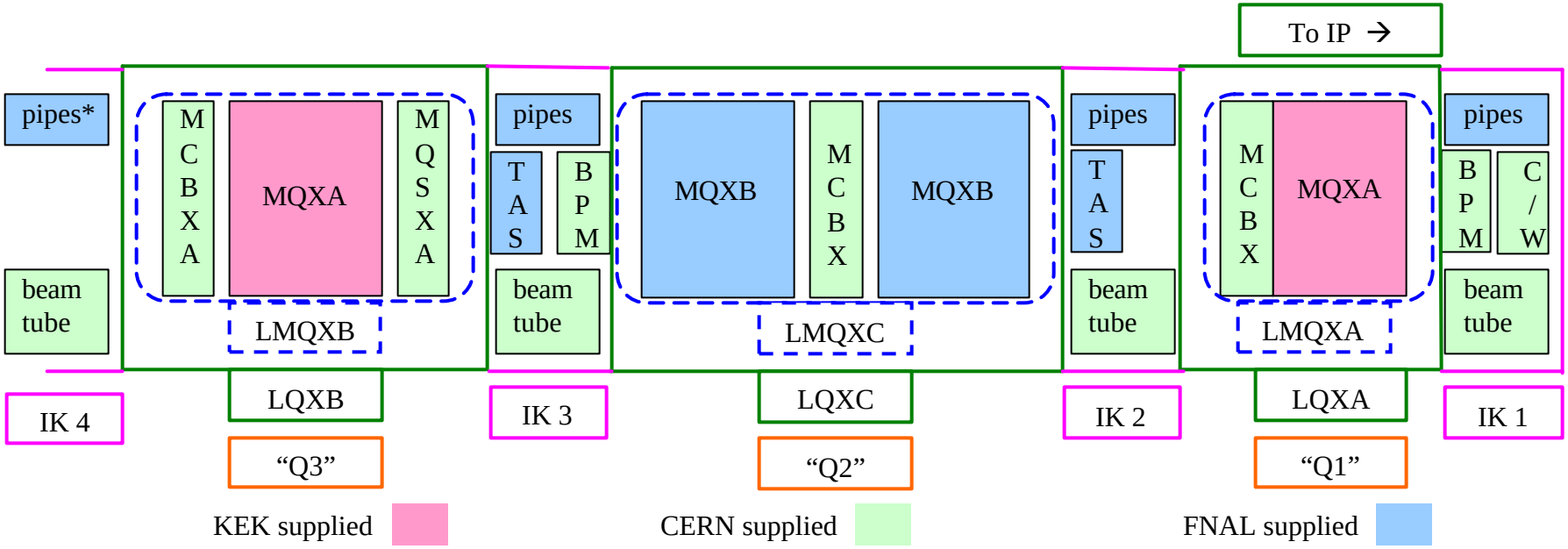

- Interconnect kits (IK) and beam tube liners installed at CERN
- IP 2/8 interconnect kits do not have TAS components

Requirements

Derived from Inner Triplet and Main Component Interfaces

- Optics / Layout
- Alignment
- Heat Load / Cryogenic
- Radiation
- Electrical
- Mechanical

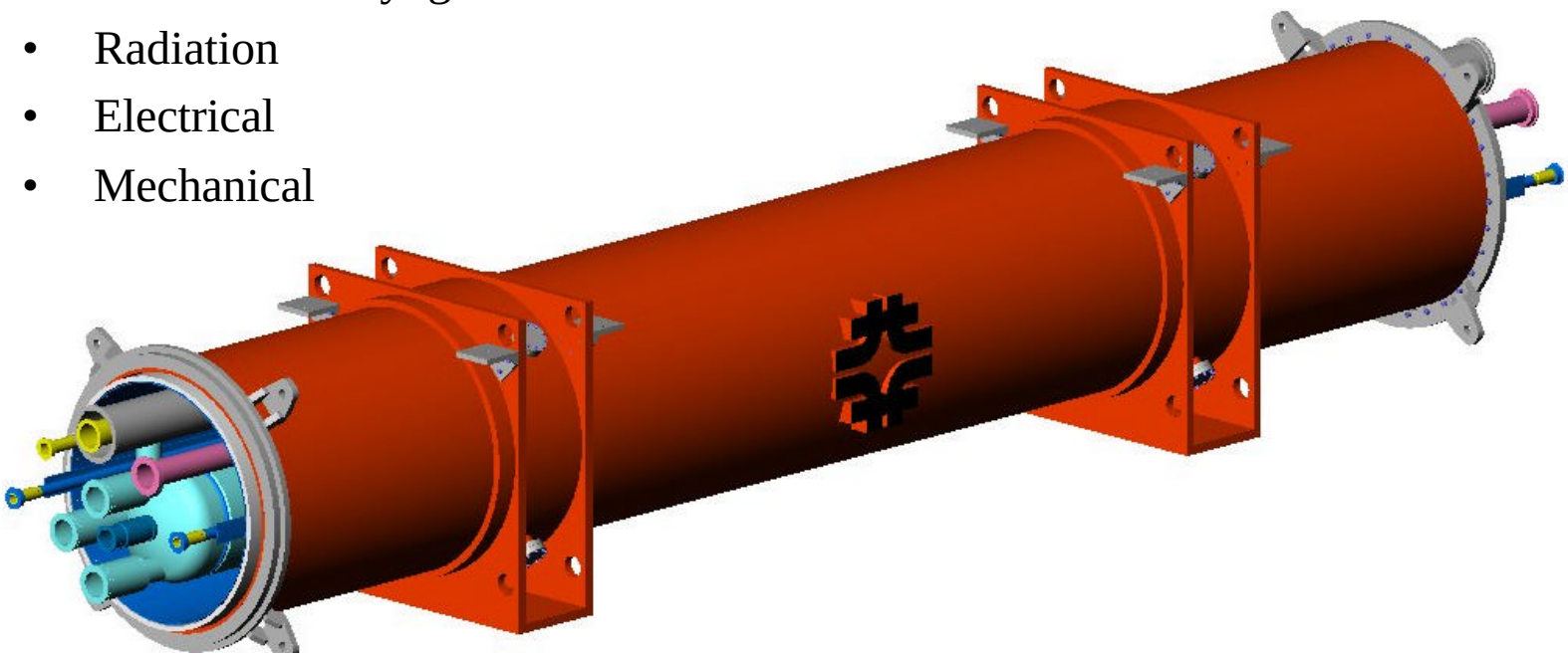

Optics / Layout

The optics / layout is based on v6.2 optics

- recent discussions on moving Q2 further from the IP and relocating a BPM are not reflected in these presentations

- the impact can be discussed later this afternoon

Interaction Regions 1, 5			
Component	Nominal Strength	Magnetic Length	IP to Mag. Center
MQXA (Q1)	199 T/m	6.3 m	26.15 m
MCBX	Table 4-2	Table 4-2	29.86 m
MQXB (Q2a)	199 T/m	5.5 m	34.55 m
MCBX	Table 4-2	Table 4-2	37.80 m
MQXB (Q2B)	199 T/m	5.5 m	41.05 m
MQSXA	Table 4-2	Table 4-2	46.91 m
non-linear correctors			46.67 m
MQXA (Q3)	199 T/m	6.3 m	50.45 m
MCBXA	Table 4-2	Table 4-2	54.10 m
non-linear correctors			54.30 m

Interaction Regions 2, 8			
Component	Nominal Strength	Magnetic Length	IP to Mag. Center
MQXA (Q1)	214 T/m	6.3 m	26.15 m
MCBX	Table 4-2	Table 4-2	29.86 m
MQXB (Q2a)	214 T/m	5.5 m	34.55 m
MCBX	Table 4-2	Table 4-2	37.80 m
MQXB (Q2B)	214 T/m	5.5 m	41.05 m
MQSXA	Table 4-2	Table 4-2	46.91 m
non-linear correctors			46.67 m
MQXA (Q3)	214 T/m	6.3 m	50.45 m
MCBXA	Table 4-2	Table 4-2	54.10 m
non-linear correctors			54.30 m
MBX (D1)	3.55 T	9.5 m	63.11 m

Note [a]: Preliminary longitudinal location of non-linear layers.

Alignment

Inner Triplet Alignment Table defines overall requirements

- Q2a/Q2b assembly mechanical tests completed last year
- Use of the Stretched Wire measurement system makes cryostat mechanical tolerances internal, and no build up of tolerances occurs
- Positioning of the lugs is directly related to allowable bellows offset

	AP Requirements	Mechanical Tolerances	Measurement and Survey Accuracy	
1a) Single MQX cold mass	**Not limiting as long as <>=0. Needs further study**		**Mechanical meas. Not limiting**	
Straightness H and V		100 µm/meter		
Twist		1mrad/5 meter		
1b) Single multilayer corrector field	Moved to 2b			
2a) Relative alignment of MQX magnets in composite Q2		**Mechanical tests scheduled starting in 2000**	*Mech. and stretch wire with survey equip.*	
Q2a/Q2b transverse alignment	500 µm			100 µm
Q2a/Q2b relative roll	1 mrad (rms)			100 µrad (rms)
Q2a/Q2b relative pitch and yaw	100 µrad			130 µrad
2b) Relative alignment of corrector in a composite Q2 and Q3			Should be able to do with mech measurements	
Corrector displacment	500 µm			
Corrector roll	5 mrad			
3) Placement of composite coldmass into cryostat and relating magnetic axis to external fiducial			Only includes errors relating magnetic axis to external fiducials	
Q1 Displacement transverse	300 µm	**Within limits, correctable if adjustments made to cryostat jacks, if fiducials are stable. Mechanical tests scheduled for 2001**		180 µm
Displacement longitudinal	~1mm			
Roll angle	200 µrad (rms)			100 µrad (rms)
Pitch/Yaw				130 µrad
Q2 Displacement transverse	300 µm			180 µm
Displacement longitudinal	~1mm			
Roll angle	100 µrad (rms)			100 µrad (rms)
Pitch/Yaw				130 µrad
Q3 Displacement transverse	300 µm			180 µm
Displacement longitudinal	~1mm			
Roll angle	100 µrad (rms)			100 µrad (rms)
Pitch/Yaw				130 µrad

Cryogenics

The dynamic heat load of the inner triplet is much higher than in the arcs

- 6 W/m to 1.9K (avg)
- Cryostat static heat load a less critical parameter
- Heat Exchanger system designed and tested to effectively cool for these loads

	Installed Capacity Required (W)		
	70K	4.5K-20K	1.9K
IP1 Nominal Heat Load	785	170	185
IP1 Ultimate Heat Load	785	205	420
IP1 Installed Capacity	1180	300	425
IP2 Nominal Heat Load	845	130	60
IP2 Ultimate Heat Load	845	140	95
IP2 Installed Capacity	1265	240	105
IP5 Nominal Heat Load	785	170	185
IP5 Ultimate Heat Load	785	205	420
IP5 Installed Capacity	1180	300	425
IP8 Nominal Heat Load	845	130	60
IP8 Ultimate Heat Load	845	140	95
IP8 Installed Capacity	1265	240	105

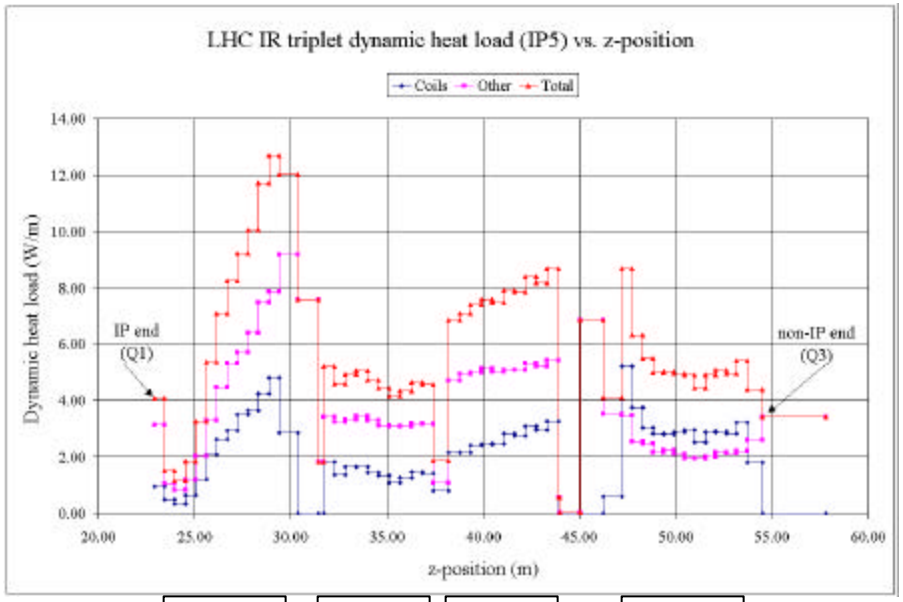

Q1 (51W) | Q2a (27W) | Q2b (50W) | Q3 (43W)

Cryogenics

Cryostat includes all piping for all cryogenic loops

- All Cryostat assemblies include the piping required for location in any of the eight locations
- 4.5K loops left open in IP2/8
- Liquid feed line added in uphill installations through heat exchanger
- Feed and return lines included and connected depending on exact location in tunnel
- All loops routed to DFBX

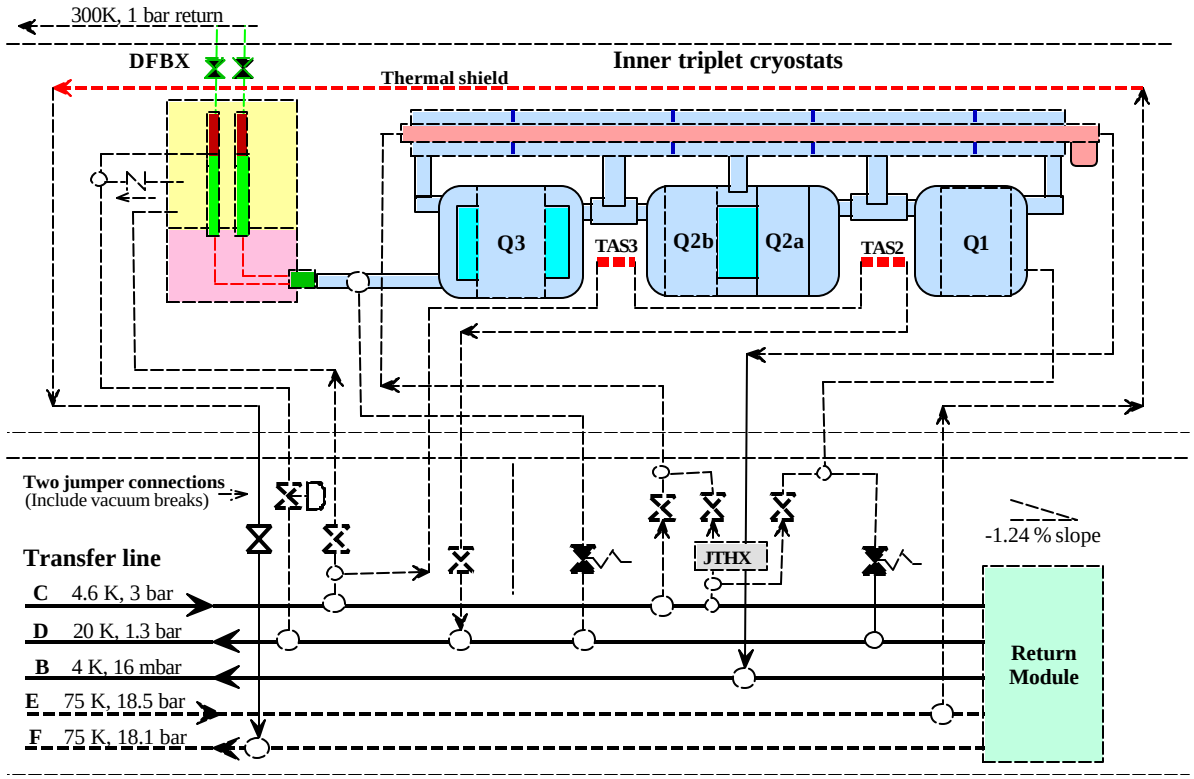

Radiation

Deposition studies also give radiation environment

- MQXB and MQXA cold masses are limited to 6-7 years at nominal luminosity in LHC inner triplets

- The peak calculated load to the cryostat components is 13.5kGy / year

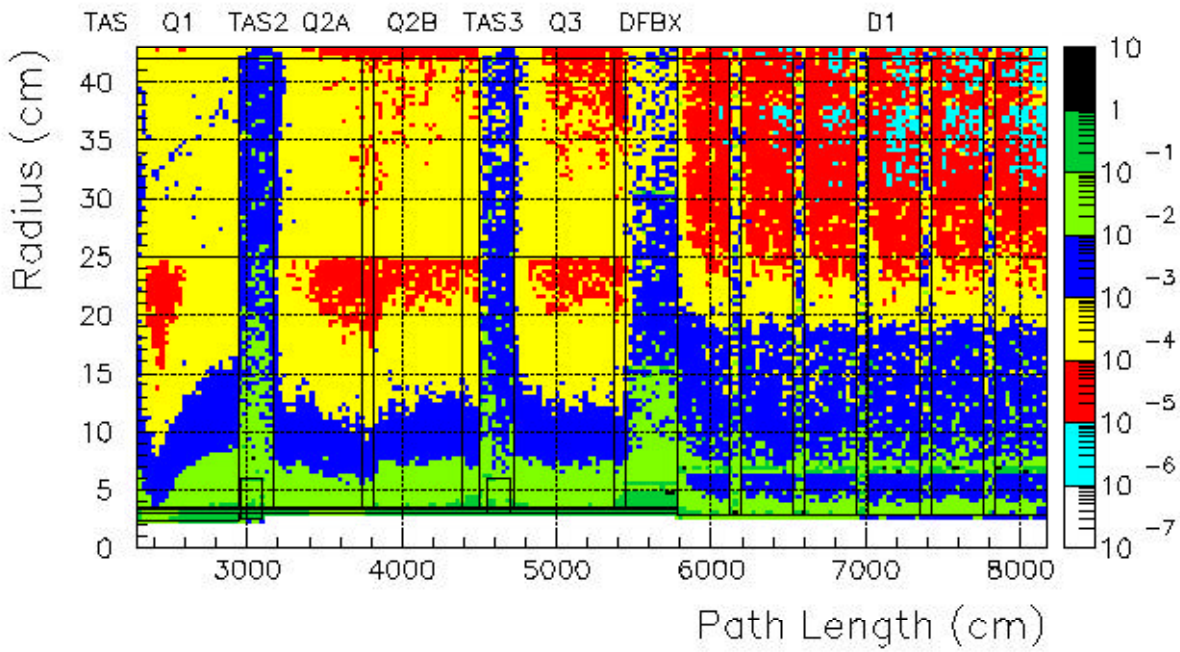

Electrical

Quads provide route for all bus and wire internal to the helium vessel

BPM leads, passive heater instrumentation routed out locally through vacuum vessel

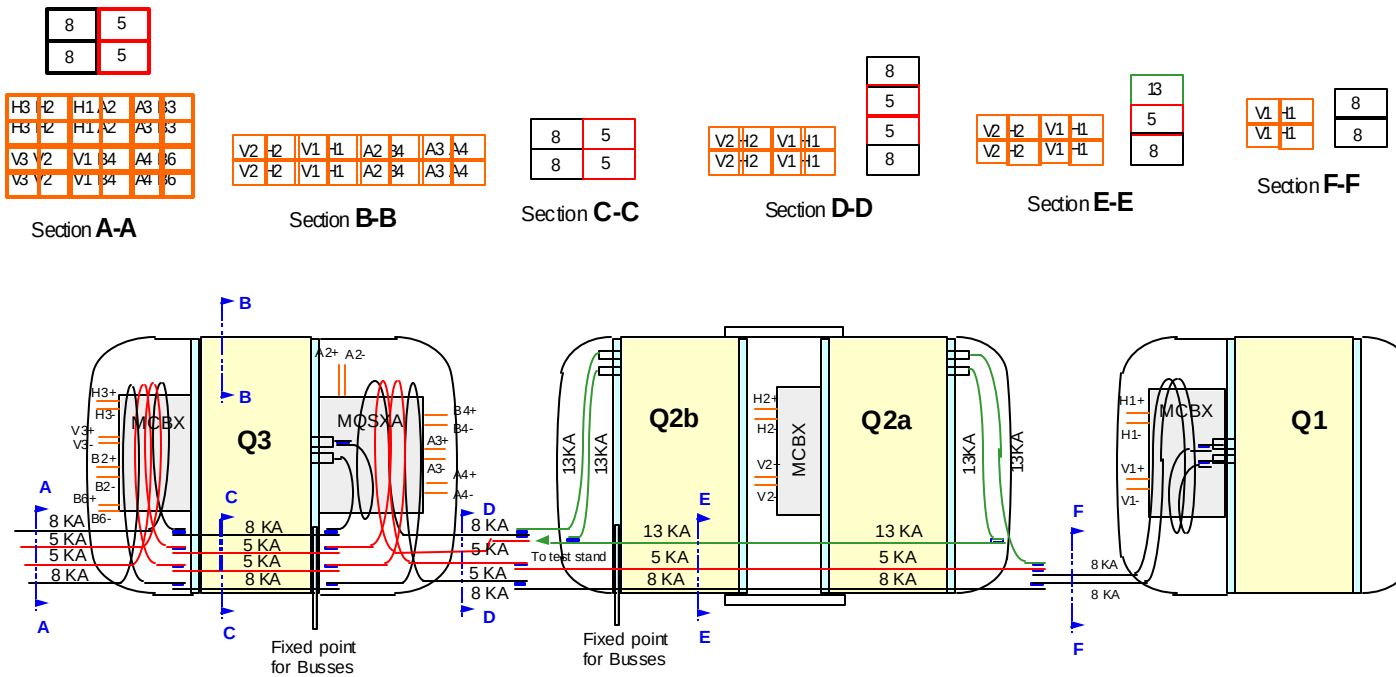

Inner Triplet Buss and Expansion Loop Layout

Electrical

All buss and wire in the magnets are routed back to the DFBX

Main and Corrector buss routed through lower slots in magnet

Expansion loops go around correctors

Instrumentation wires through side slots

Wire or Bus	Number in: Q1-Q2 Interconnect	Number in: Q2-Q3 Interconnect	Number in: Q3- DFBX Interconnect
MQX Bus	2-3	3-4	4
Corrector Bus	4	8	24
MQX Voltage Taps	6	18	24
Corrector Voltage Taps	2	4	12
Quench Heater Leads	4	12	16
Warm up Heater Leads	4	12	16
Thermometer Leads	8	24	32
Total Instrumentation Wires	24	70	100

Mechanical

Mechanical interfaces within the LQX are well understood

- Mechanical drawings of Fermilab, KEK, and CERN magnets are circulated and discussed thoroughly. All production drawings are OK.
- Discussions on the lengths and locations of leads have recently converged
- Means to transfer the magnetic alignment information for each magnet are defined and reflected in the drawings
- Cryostat interface to supports is known
- Alignment transfer gallery interface has been defined

Interconnect Kits are impacted by the current discussions on BPM location, TAS design, and active/passive beam tube liners and therefore are not as yet converged.

Mechanical

MQXA...

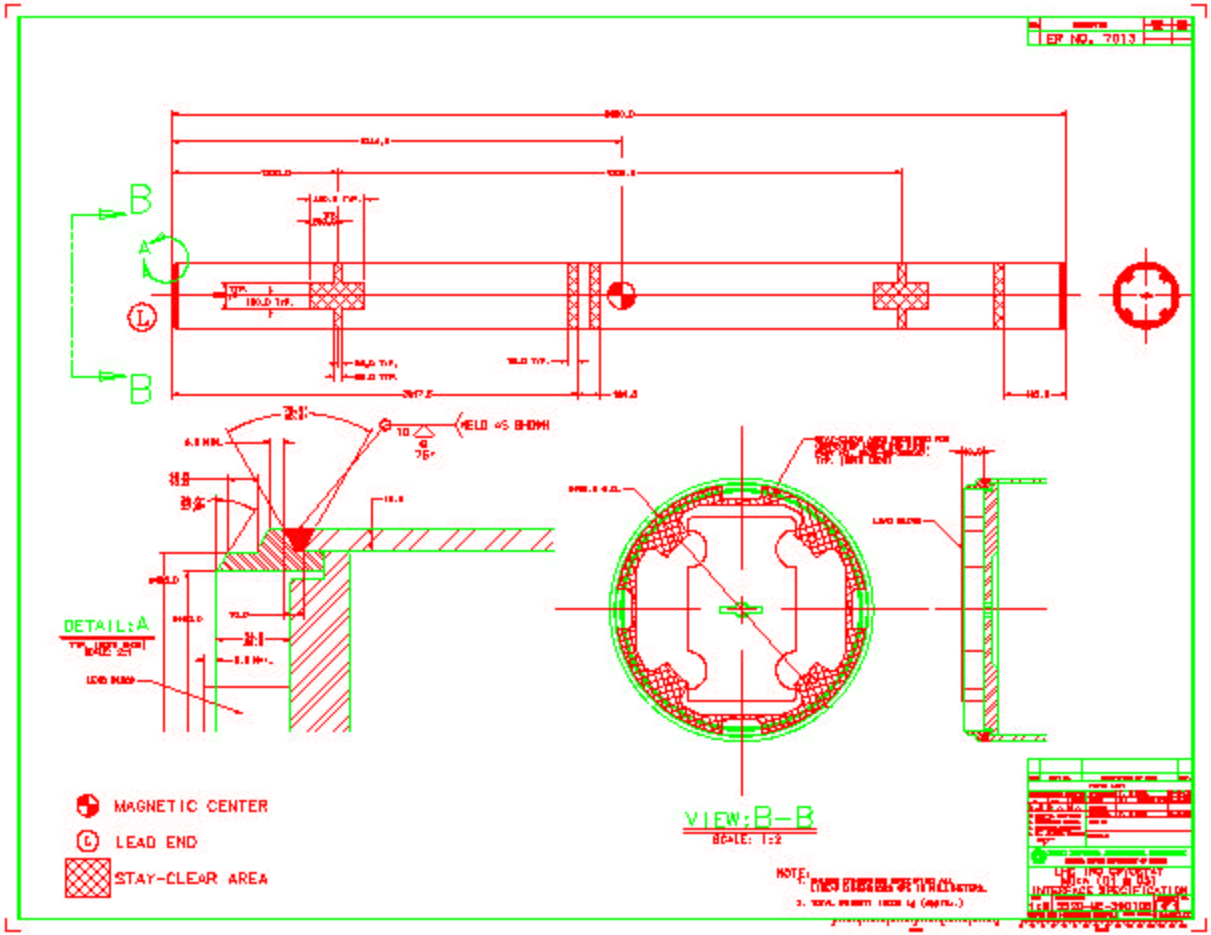

Mechanical

MQXB...

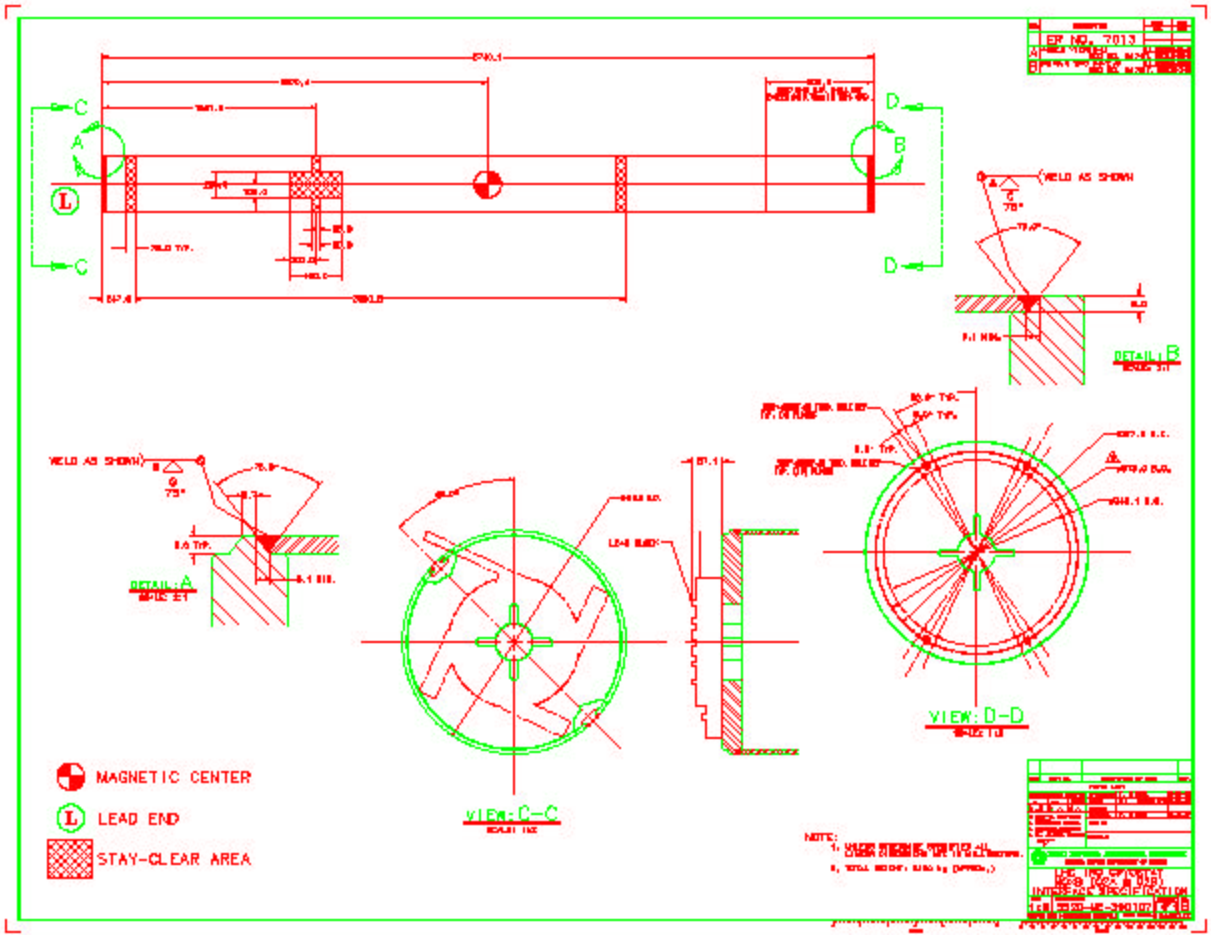

Mechanical

MCBX...

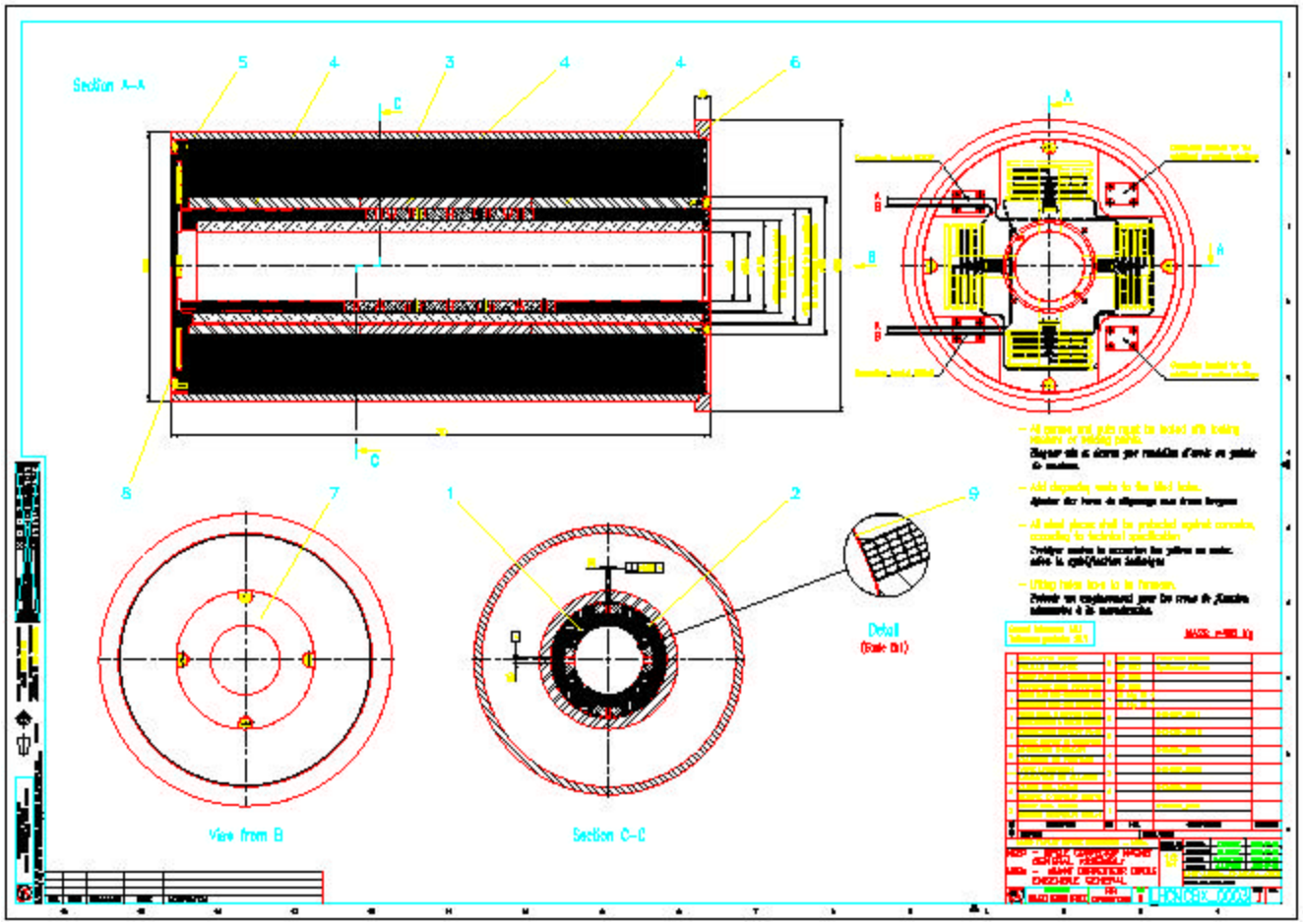

Mechanical
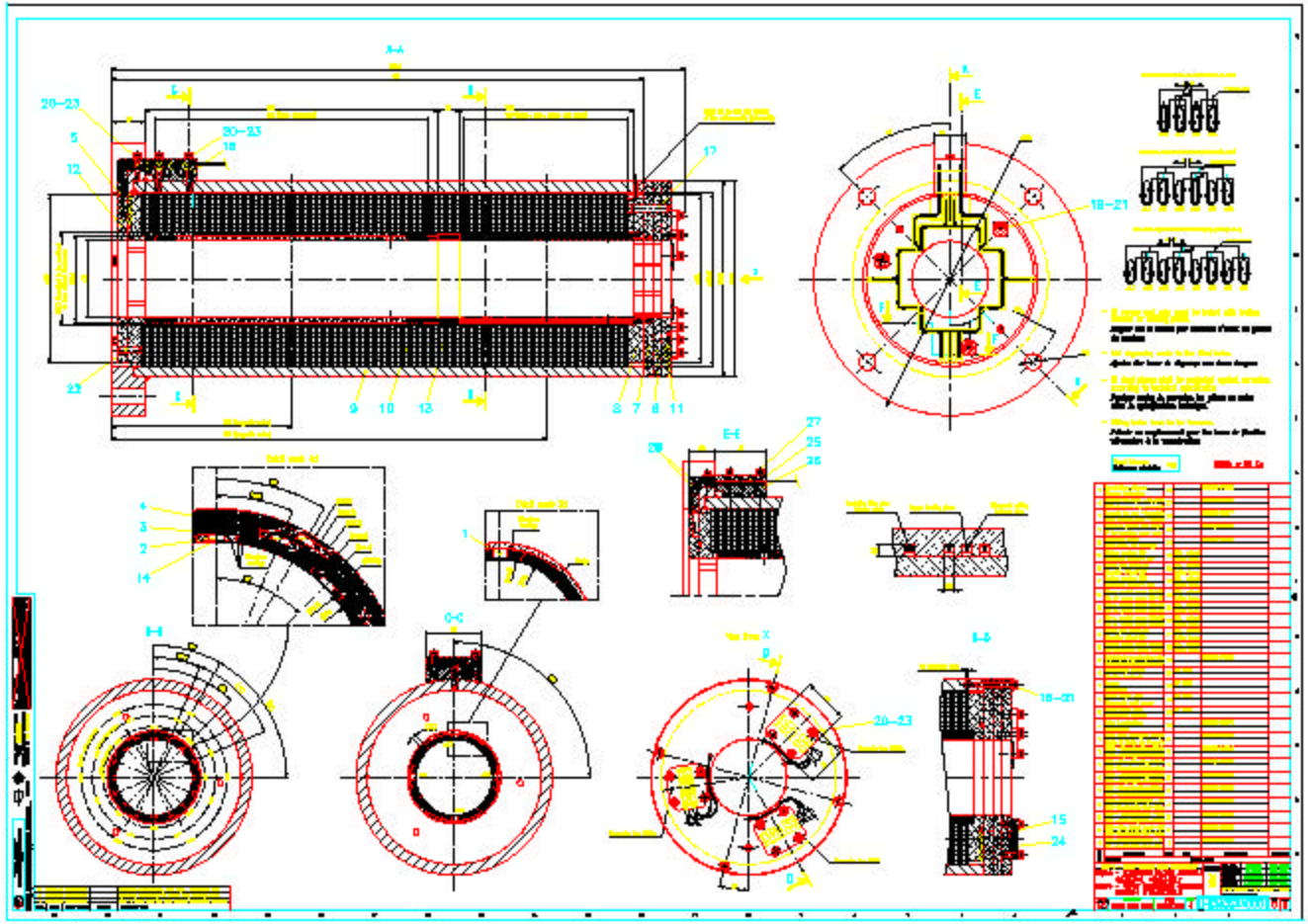
MQSXA...