US LHC ACCELERATOR PROJECT

*brookhaven - **fermilab** - berkeley*

LHC IRQ Cryostat Engineering Design Review

March 12, 2001

T. Page - Fermilab

Topics

- Corrector Mounting
- Interconnect Design
- Q2A / Q2B Weld Test Results

Corrector Locations

Magnet	*End*	*Corrector*
Q1	Lead (Non-IP)	MCBX
Q2A	Non-Lead (Non-IP)	
Q3	Non-Lead (Non-IP)	
Q3	Lead (IP)	MQSXA

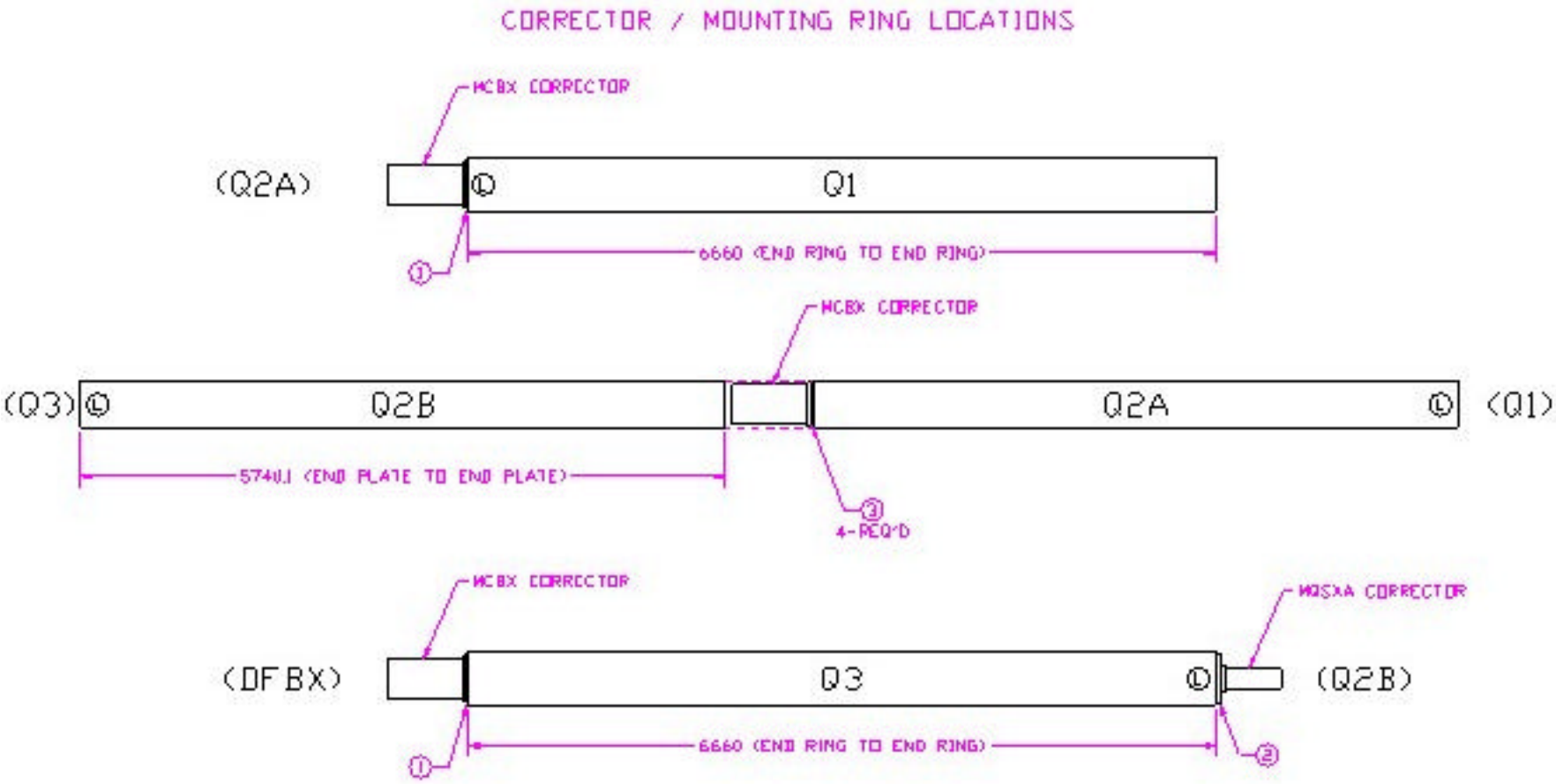
CORRECTOR / MOUNTING RING LOCATIONS
MCBX CORRECTOR
(Q2A)
Q1
6660 (END RING TO END RING)
MCBX CORRECTOR
(Q3)
Q2B
Q2A
(Q1)
5740.1 (END PLATE TO END PLATE)
4-REQ'D
MCBX CORRECTOR
MQSXA CORRECTOR
(DFBX)
Q3
(Q2B)
6660 (END RING TO END RING)

Alignment Requirements

- Corrector Displacement: 500 μm [0.0197 in]
- Corrector Roll: 5 mrad

- Corrector alignment
  - Oversized holes in corrector flange to allow for adjustment.
  - Outside diameter of skin will be used for lateral alignment.
  - Dowel holes in coil / scribe line will be used for rotational alignment.

Fermilab - MCBX Mounting (Q2A)

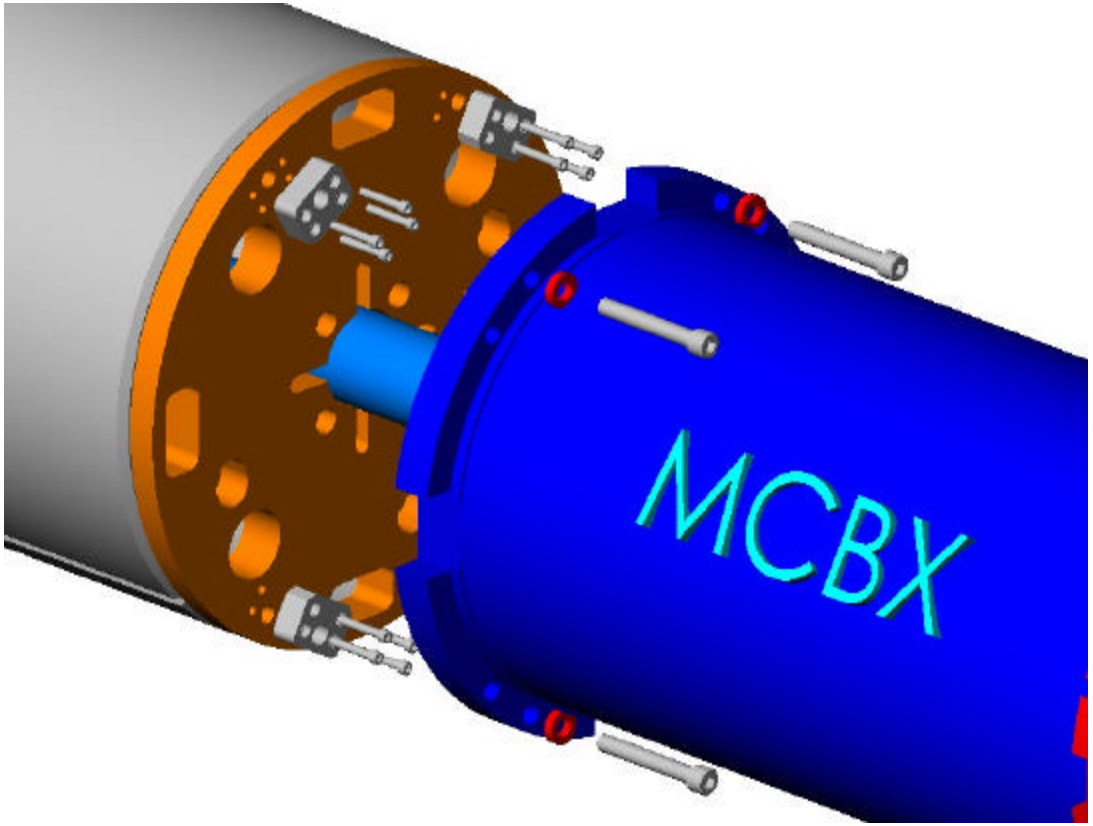

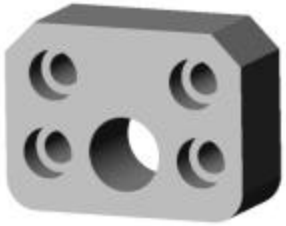

(3) MCBX Spacer

(Fermilab cold mass dia.=416mm)

KEK - MCBX Mounting (Q1 & Q3)

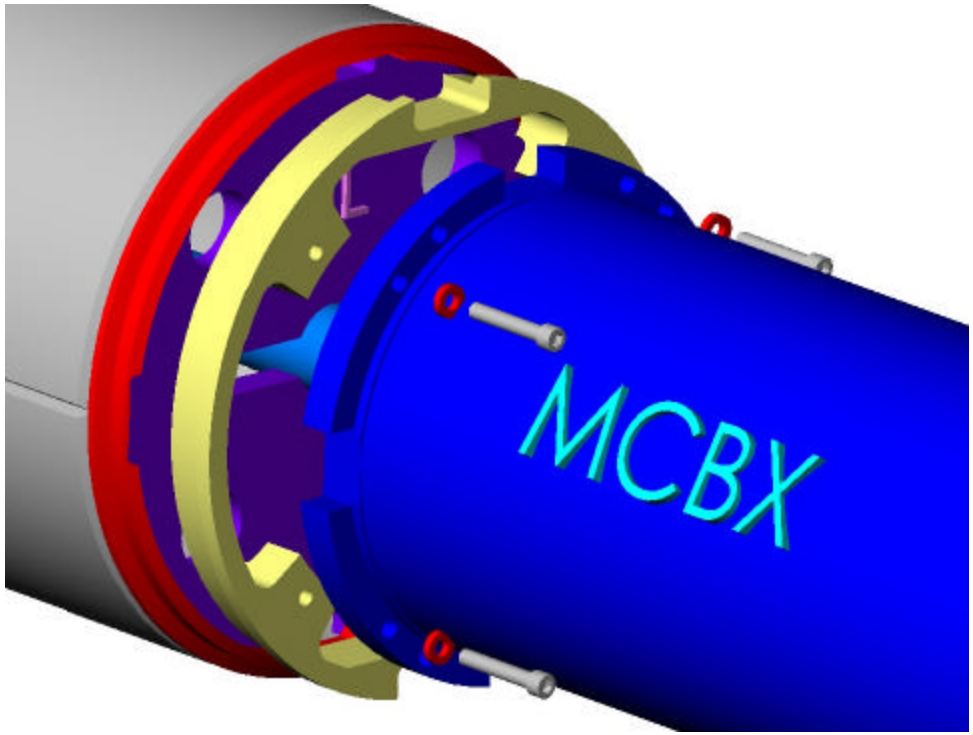

(1) MCBX Mounting Ring

(KEK cold mass dia.=490mm)

KEK - MQSXA Mounting (Q3)

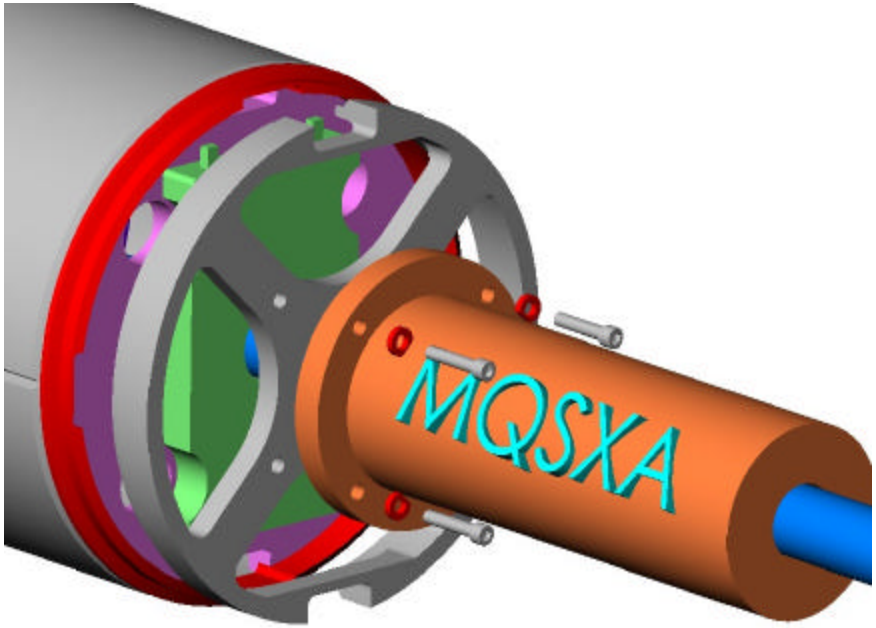

(2) MQSXA Mounting Ring

(KEK cold mass dia.=490mm)

KEK End Ring Design

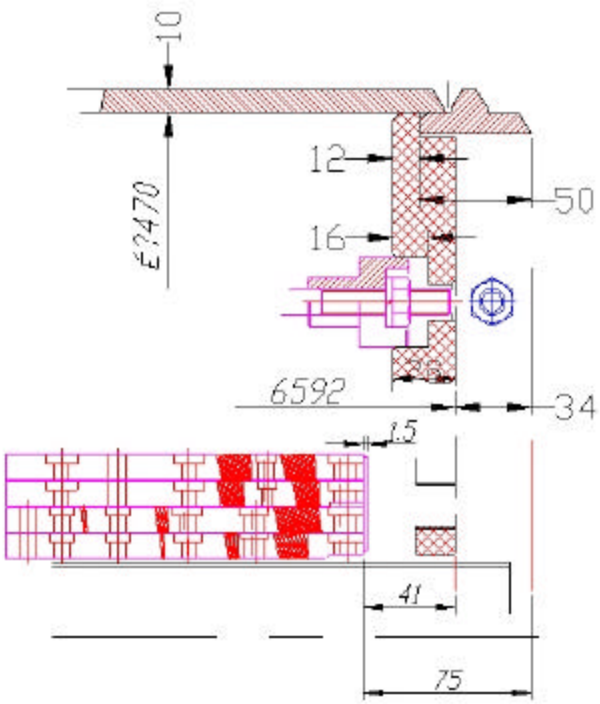

KEK Mounting Cross-Sections

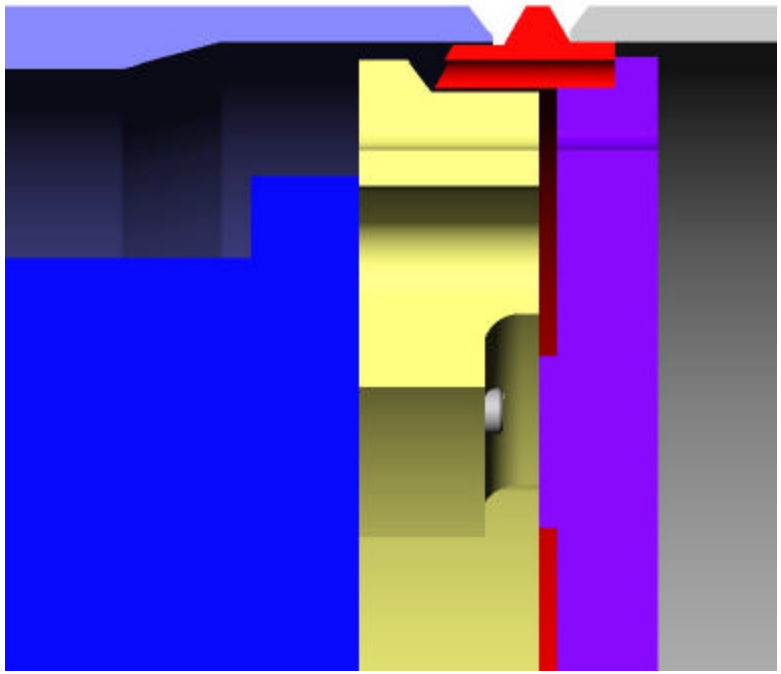

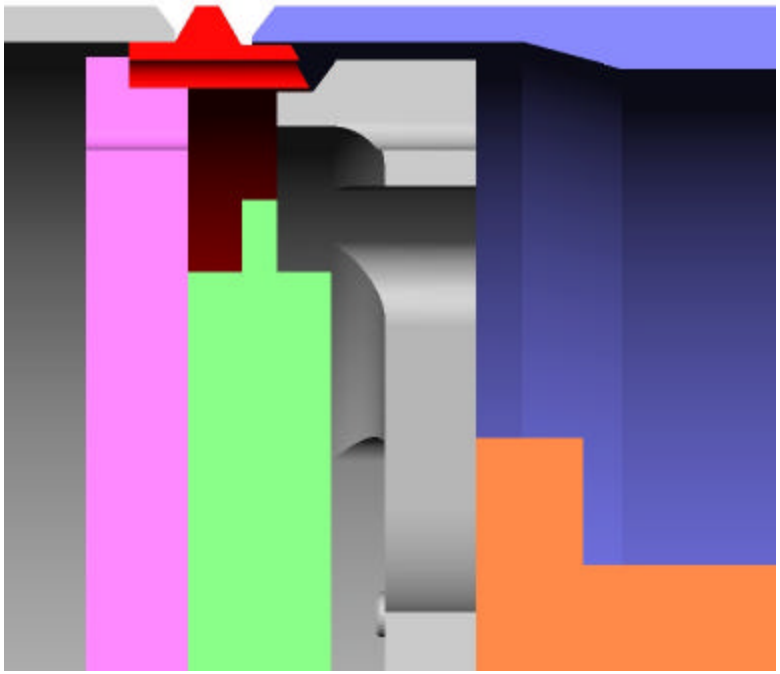

MCBX Shipping Restraint

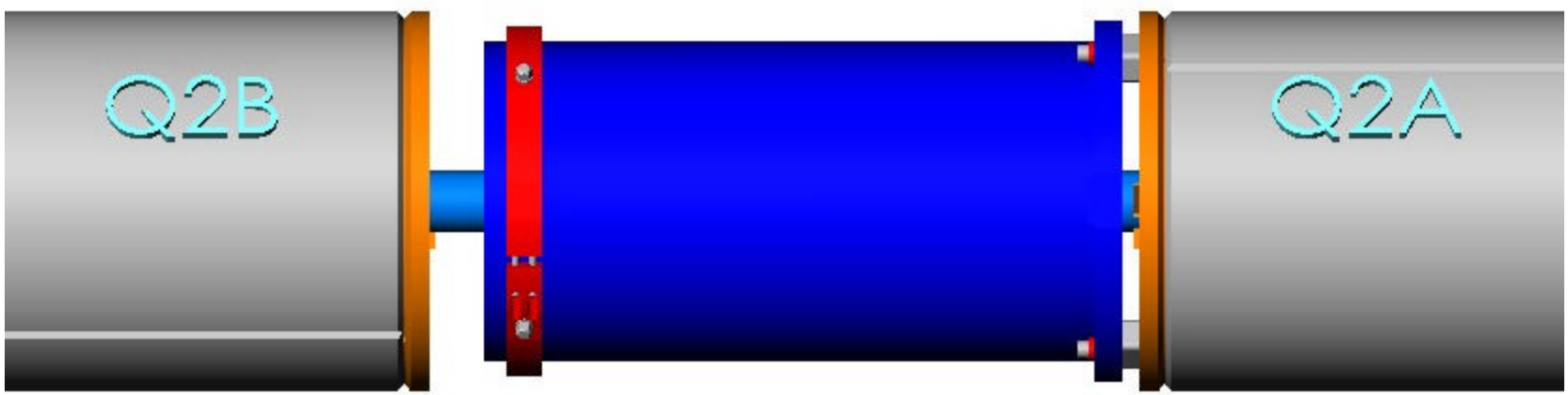

MCBX Shipping Restraint

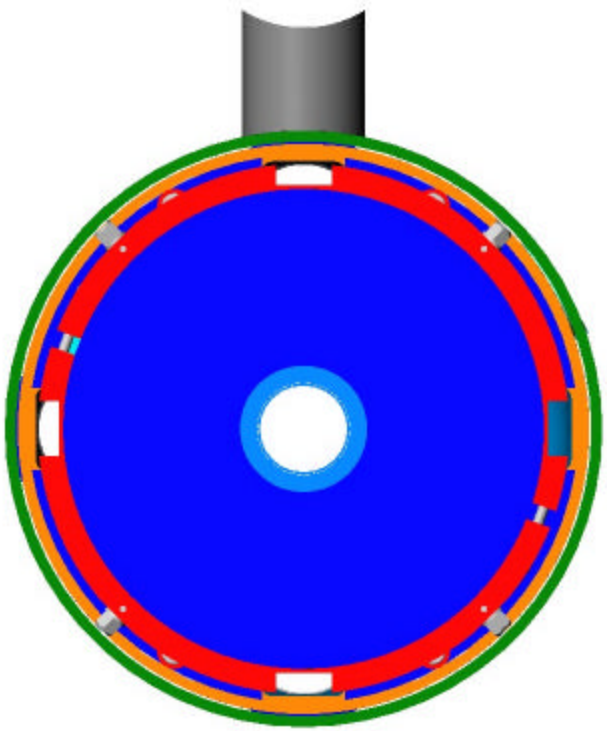

Interconnect Design

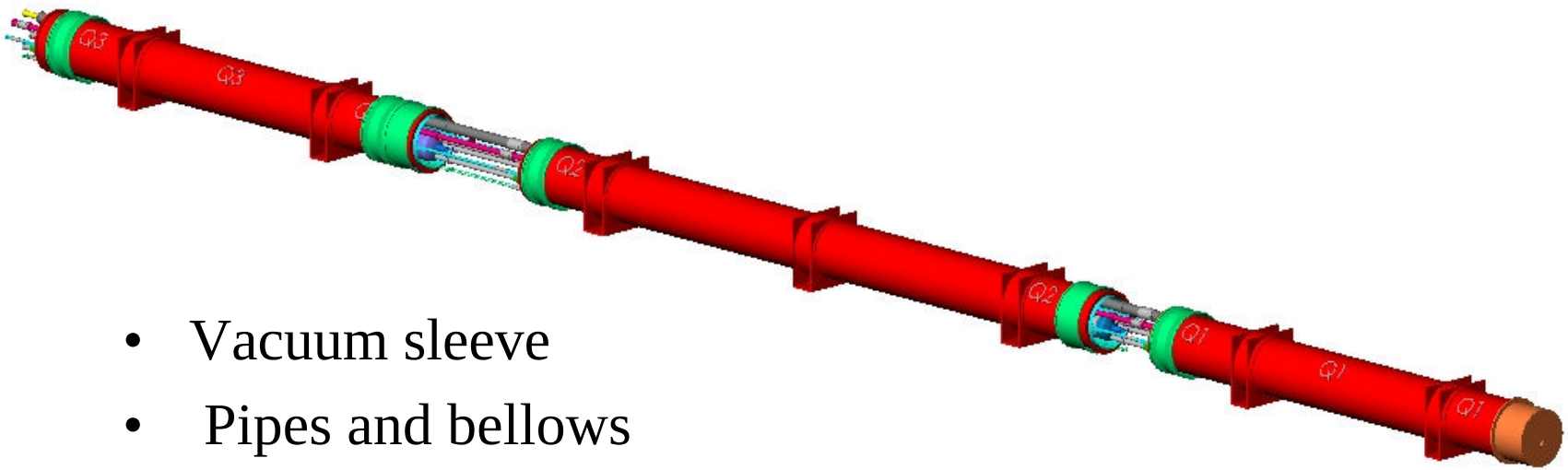

- Vacuum sleeve
- Pipes and bellows
- Absorbers
- Interconnect kit

IC Q1-Q2

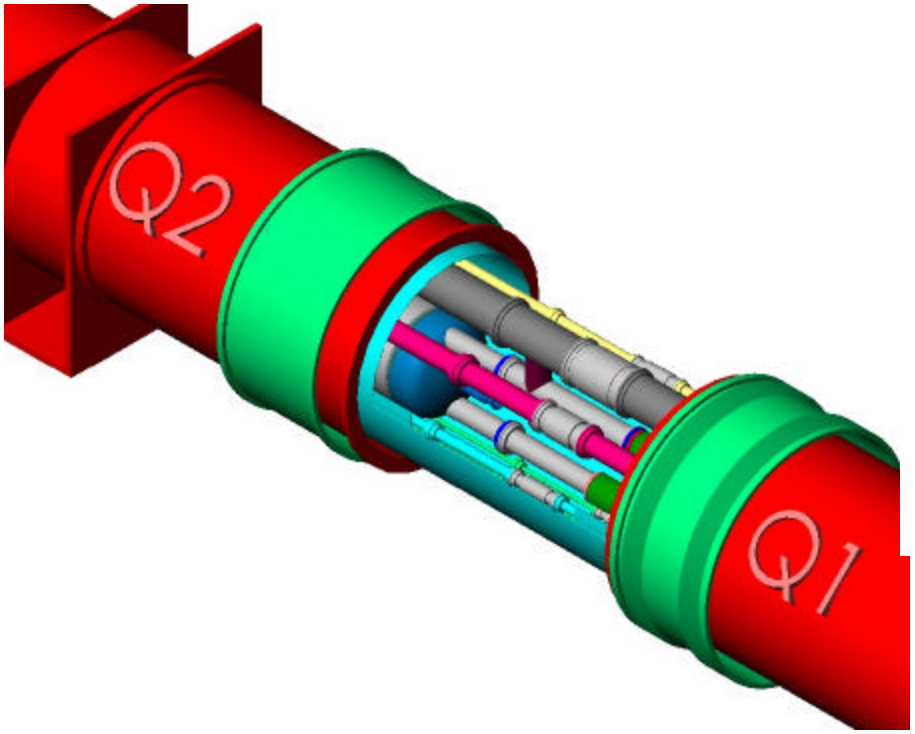

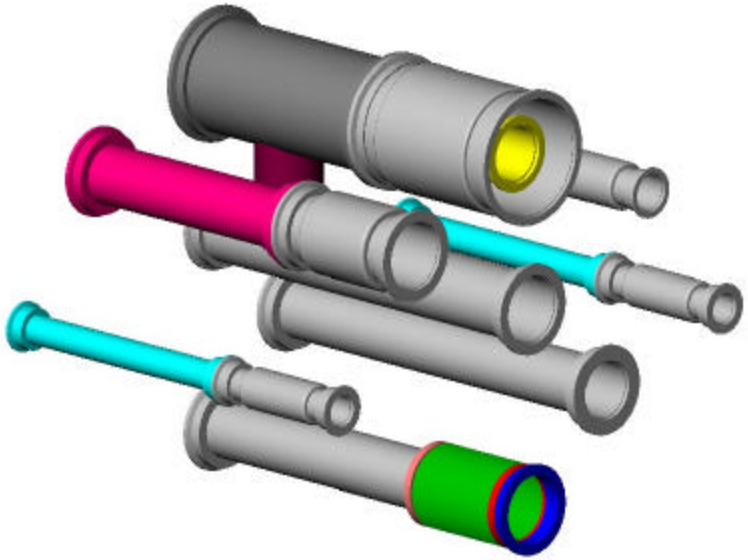

IC Q1-Q2

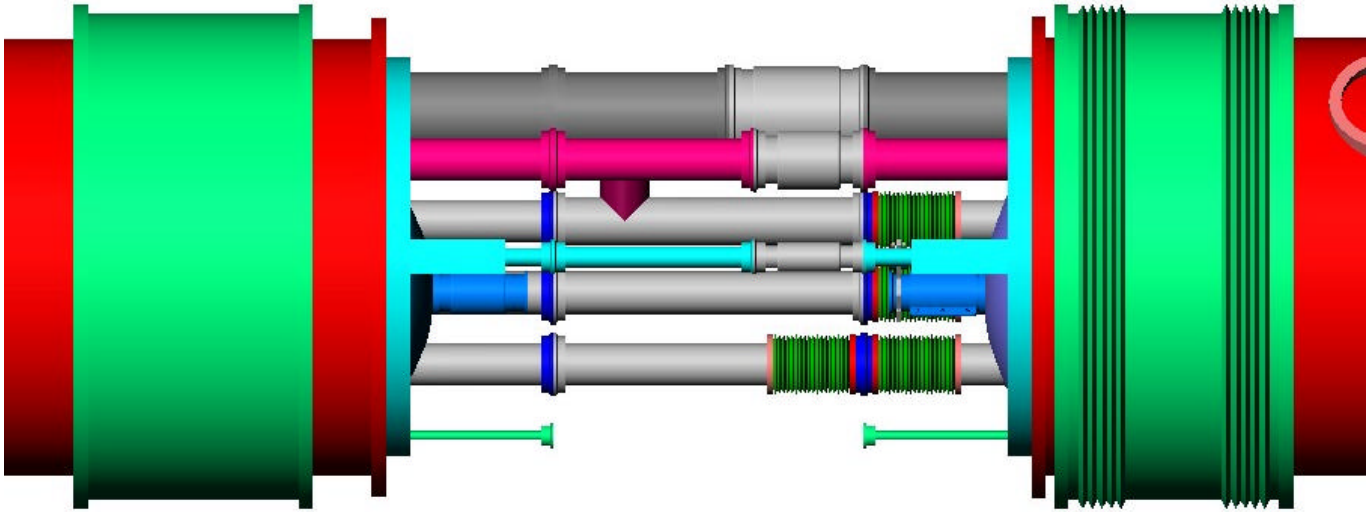

IC Q2-Q3

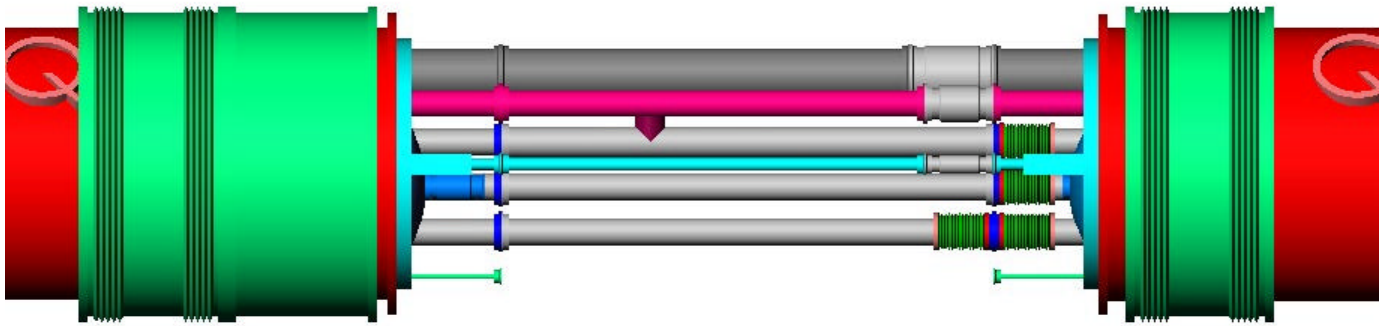

Interconnect pipe with integrated bellows

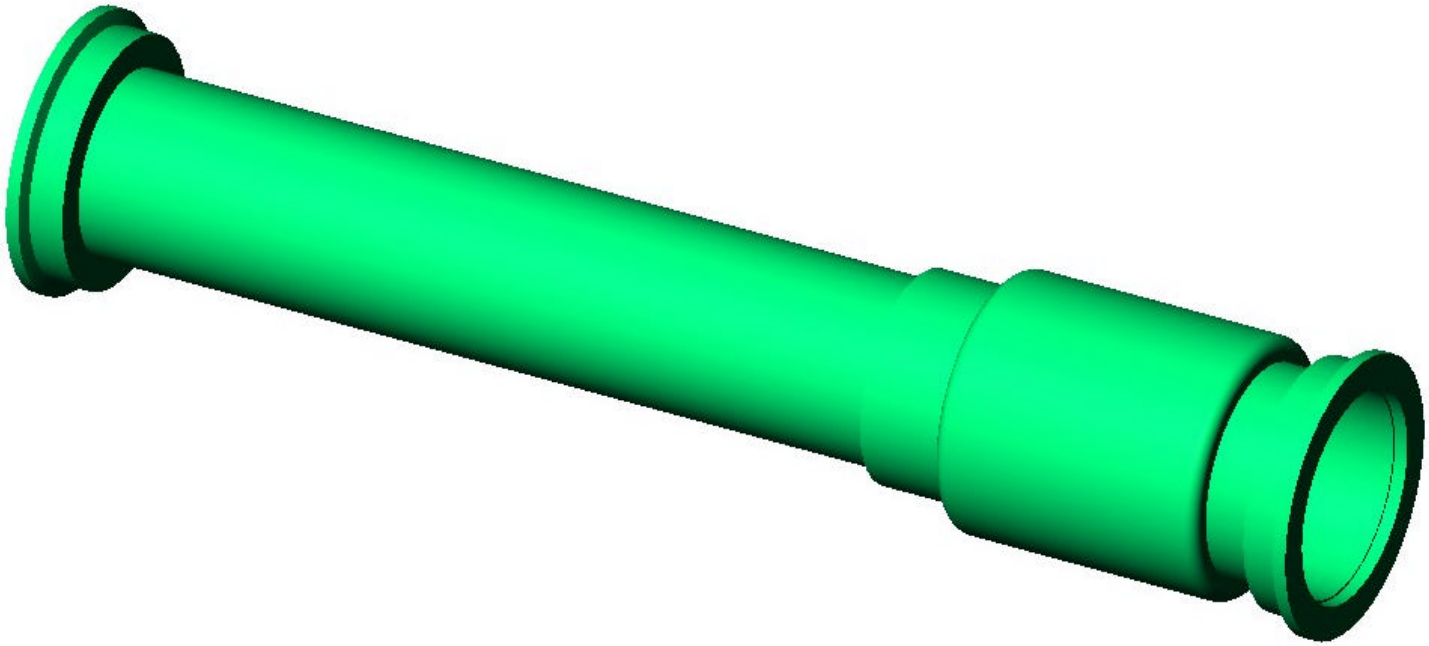

Interconnect - Welded Joint

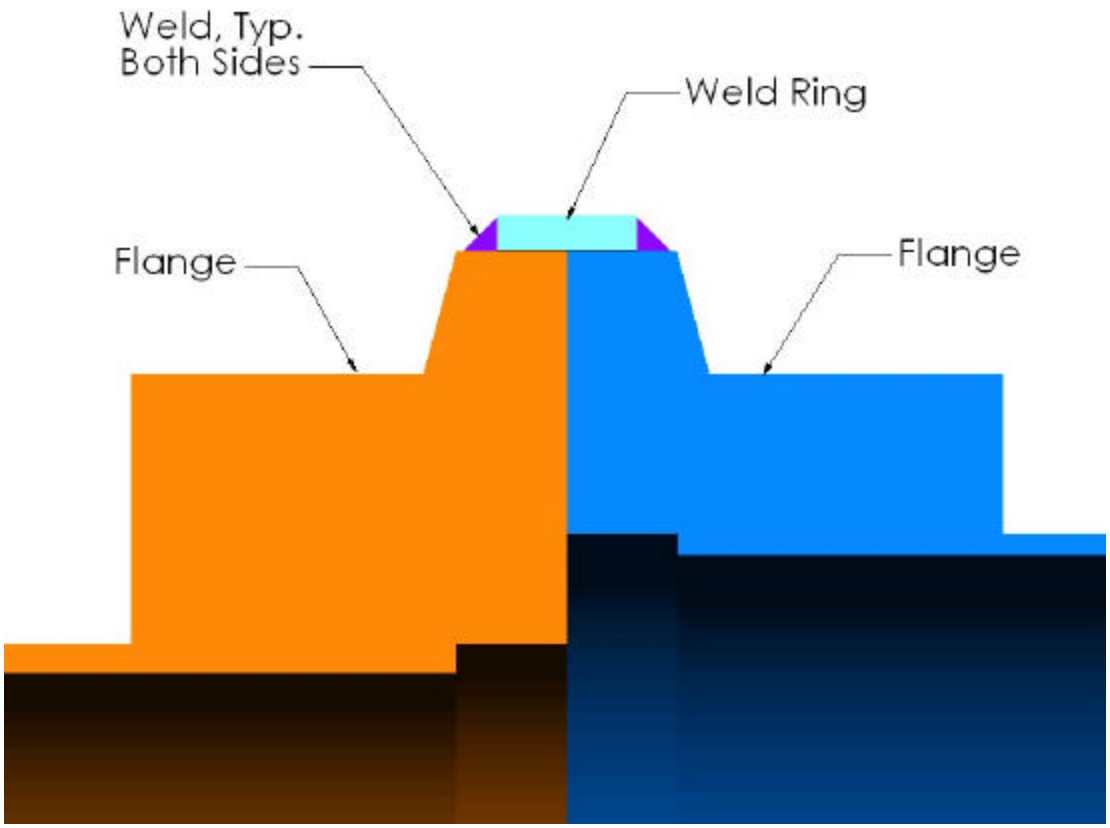

Absorber Design

- Two absorbers:
  - TAS 2: Q1-Q2A IC
  - TAS 3: Q2B-Q3 IC
- Copper clamshell around beam tube.
- Copper absorber cooled by 4.5K lines.
- Suspended in interconnect by rails mounted to end domes.
- Heat loads:
  - TAS 2 - 13.2 W total
  - TAS 3 - 15.8 W total

Absorber: TAS 3

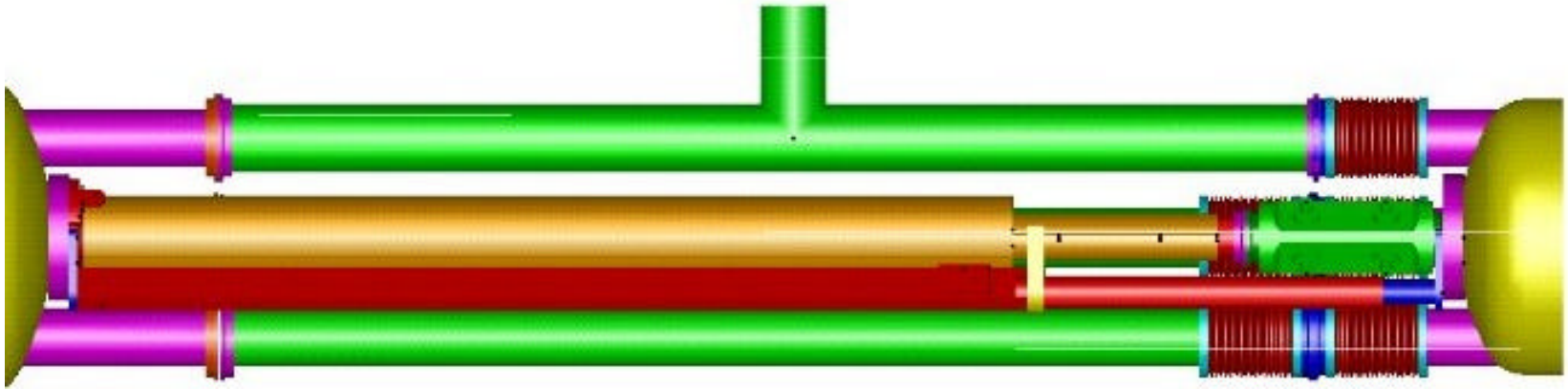

Absorber (Q3 end)

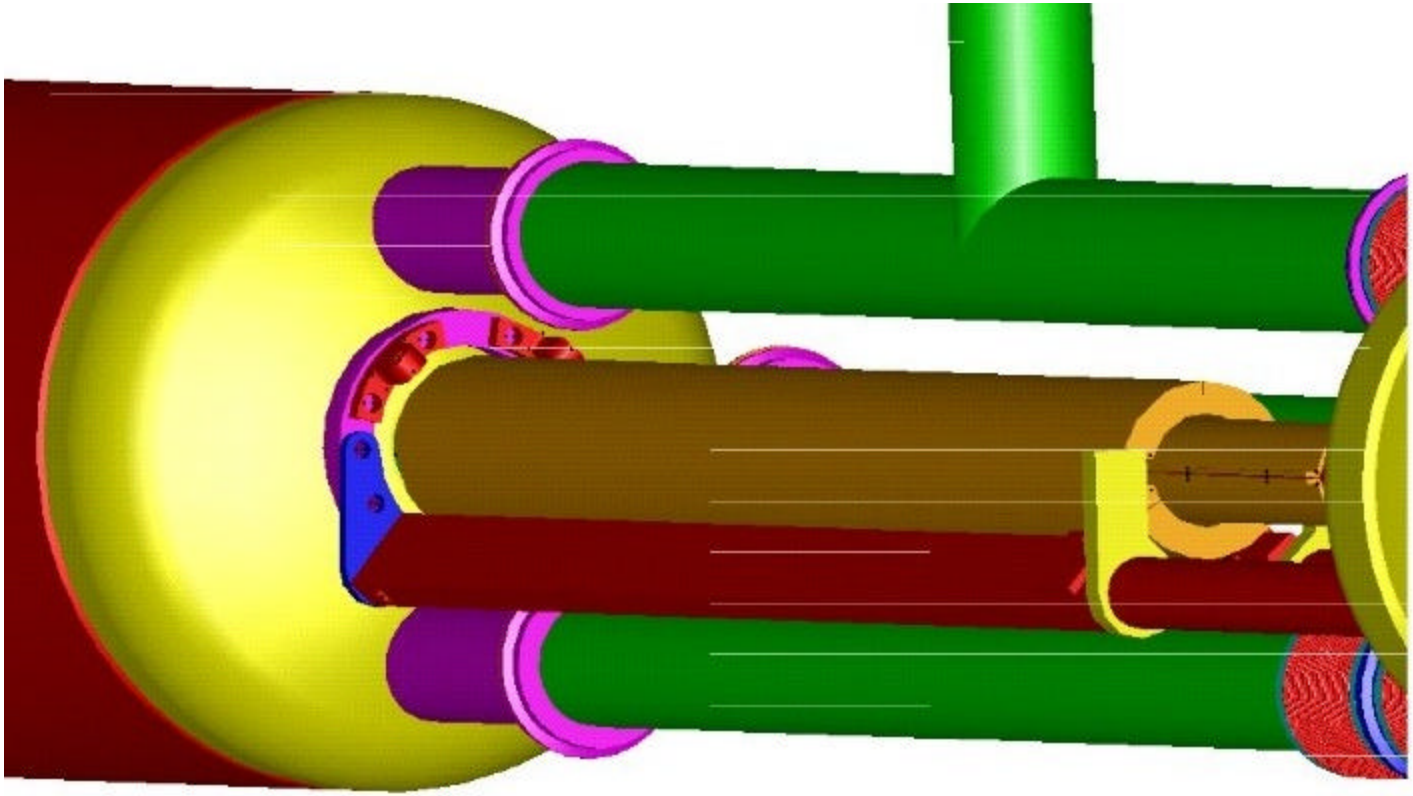

Absorber (Q2B end)

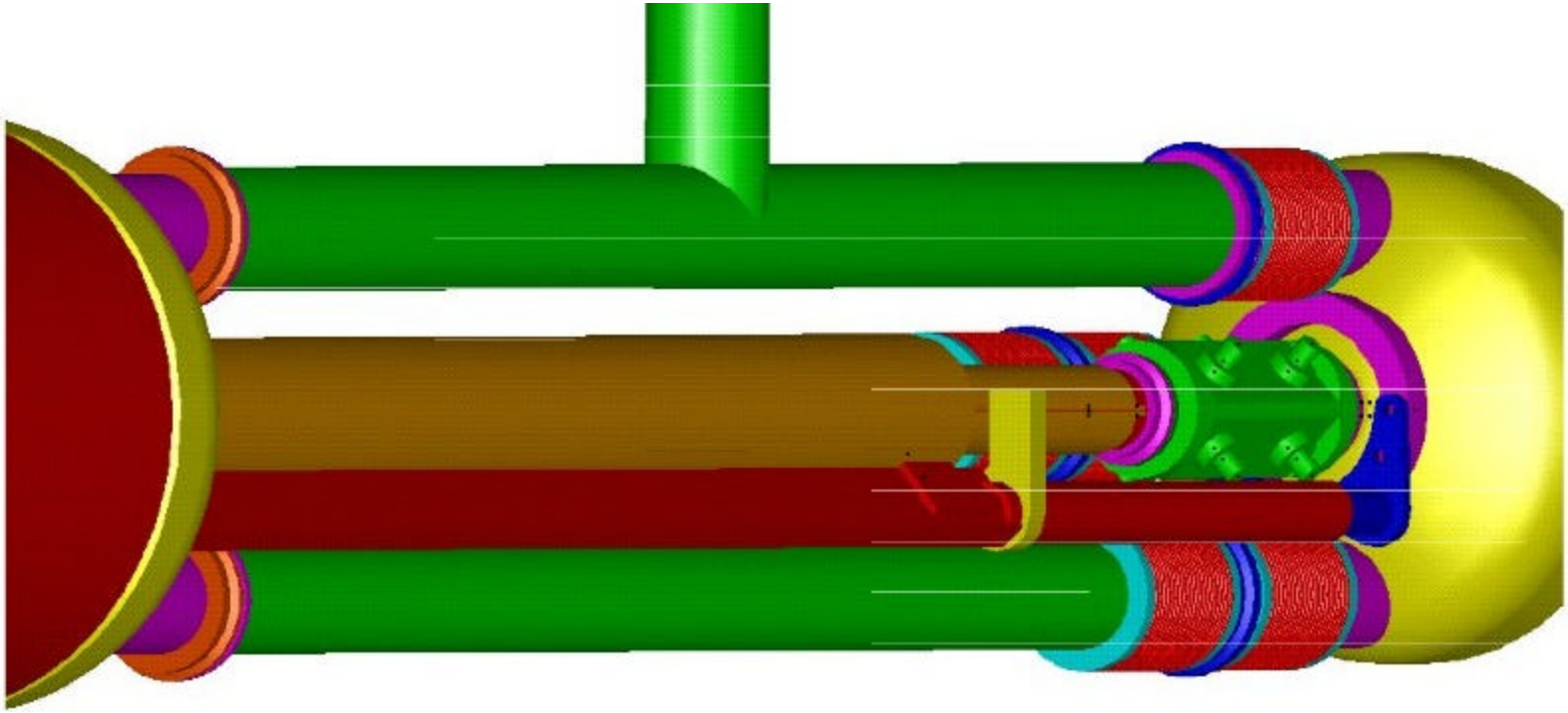

Absorber Cross-Sections

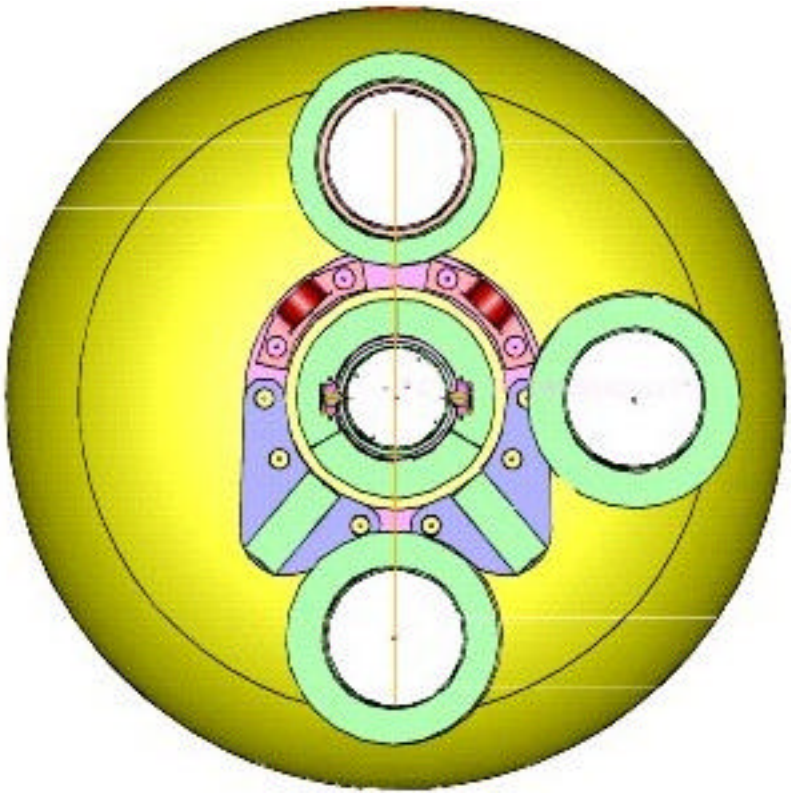

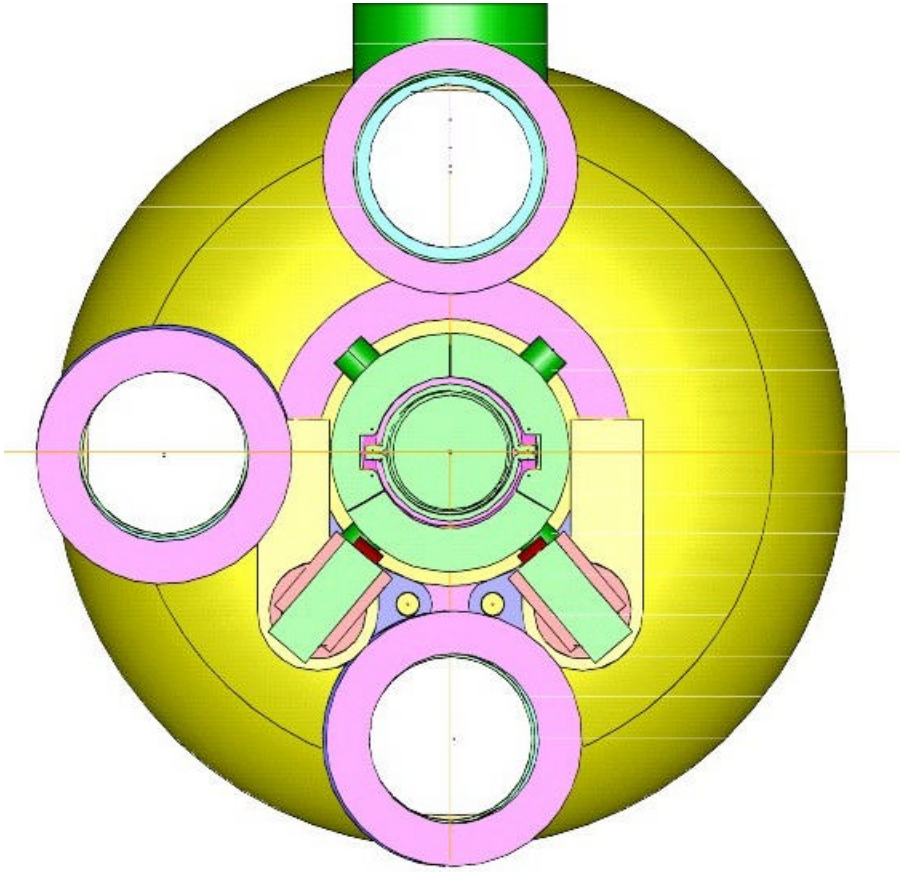

Interconnect Kit

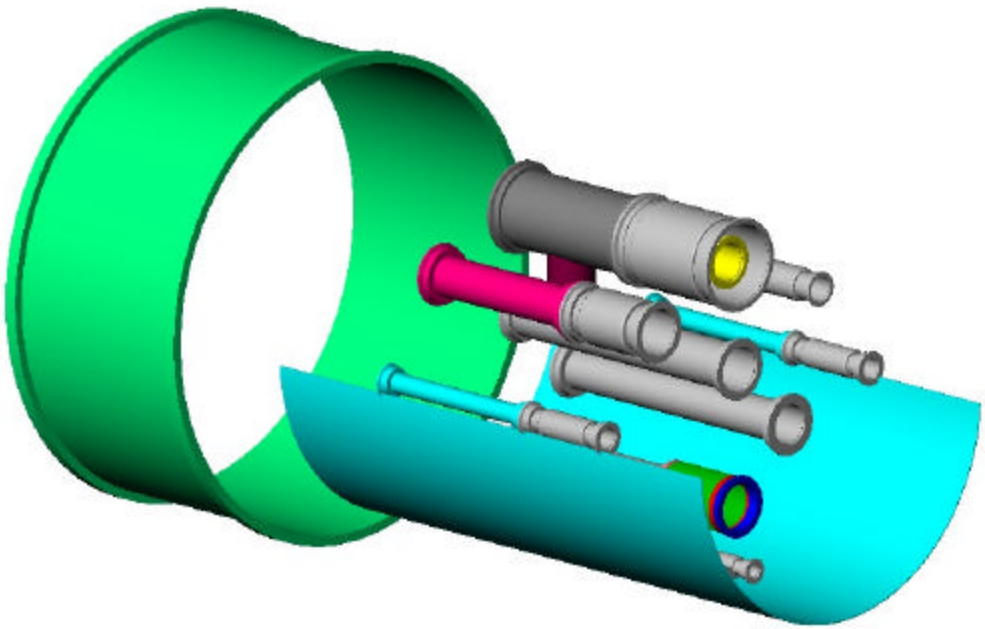

Contents:

- Absorber (not shown)
- Cold mass & heat exchanger pipes with bellows
- Weld rings
- Shield bridge
- MLI (not shown)
- Outer vacuum sleeve

Q2P1-Feedbox IC

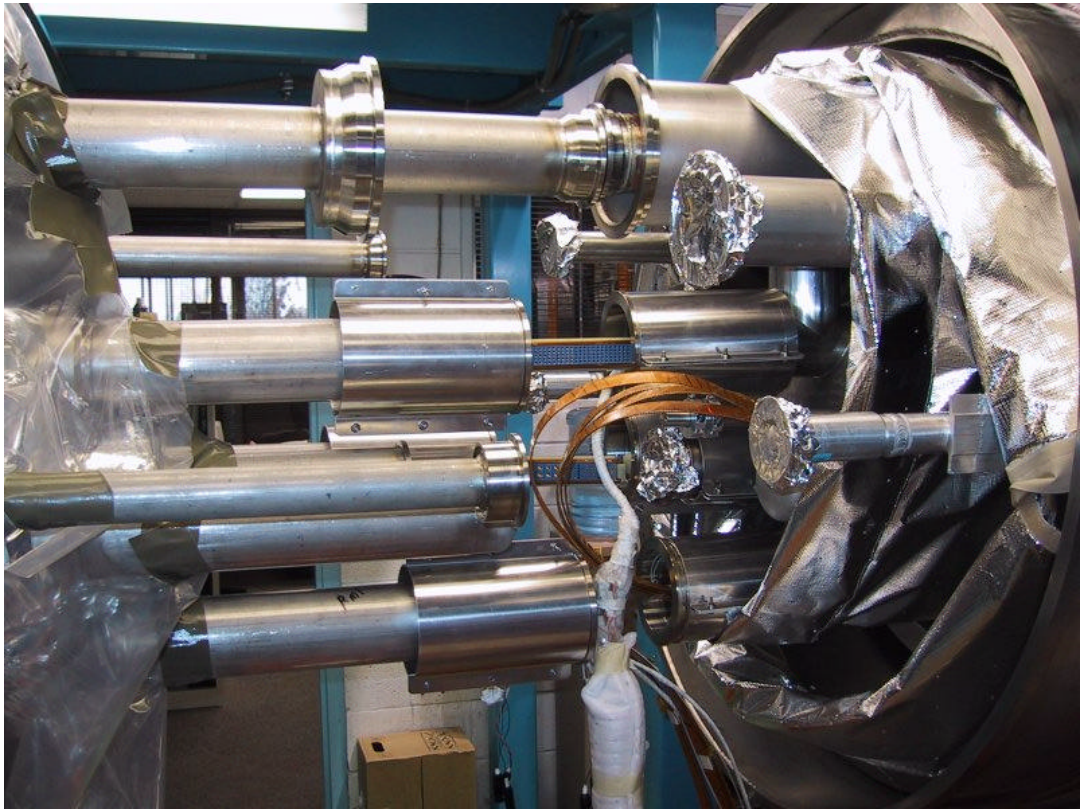

Q2P1-Return IC

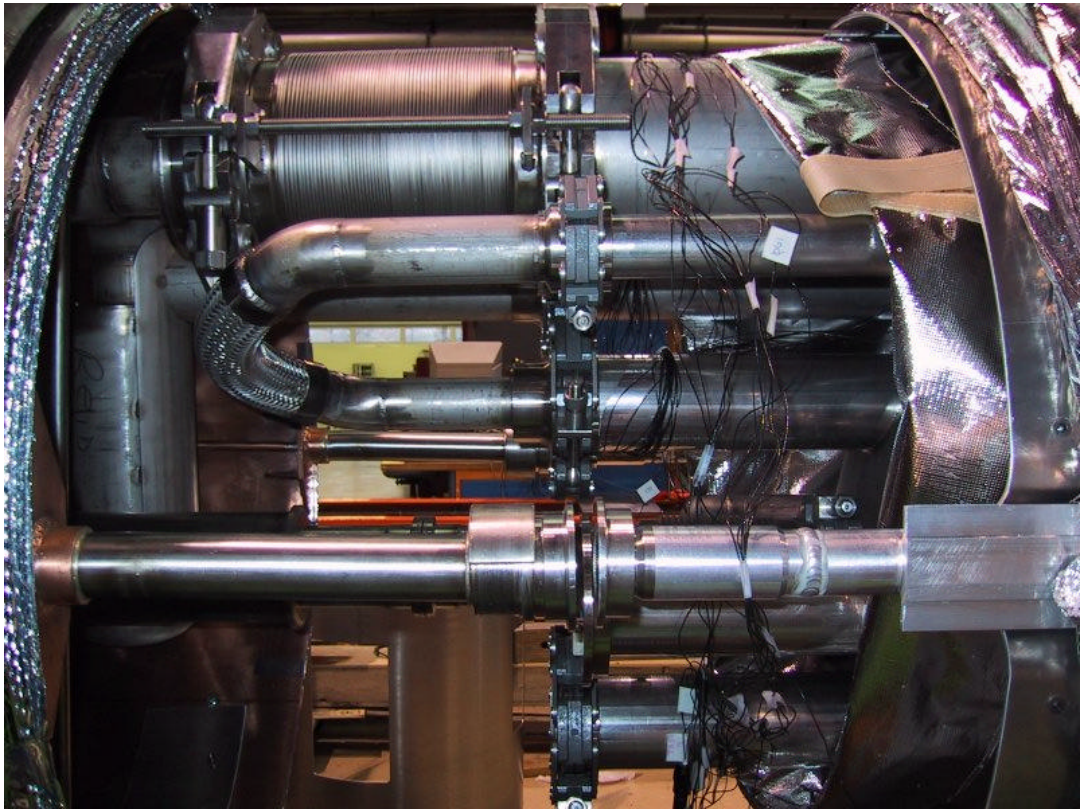

Q2A / Q2B Weld Test

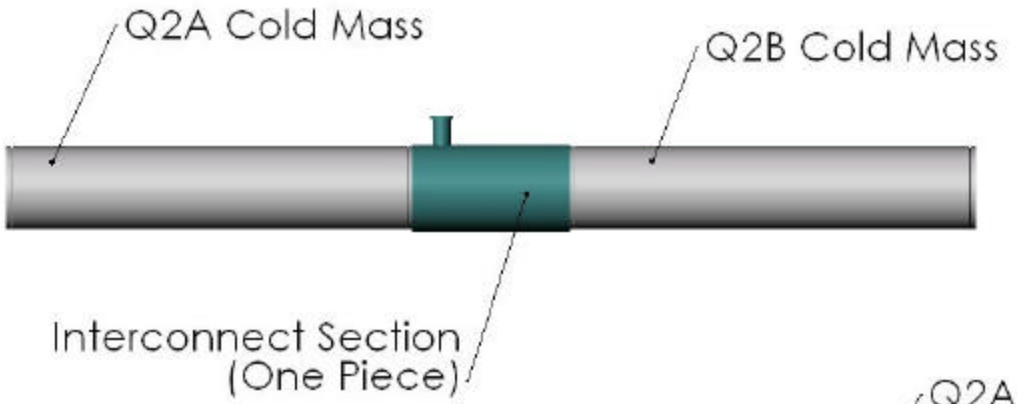

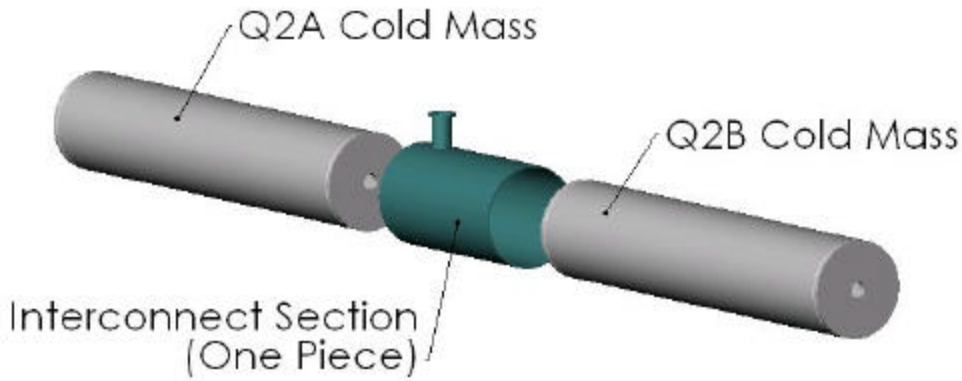

Q2A-Q2B Interconnect

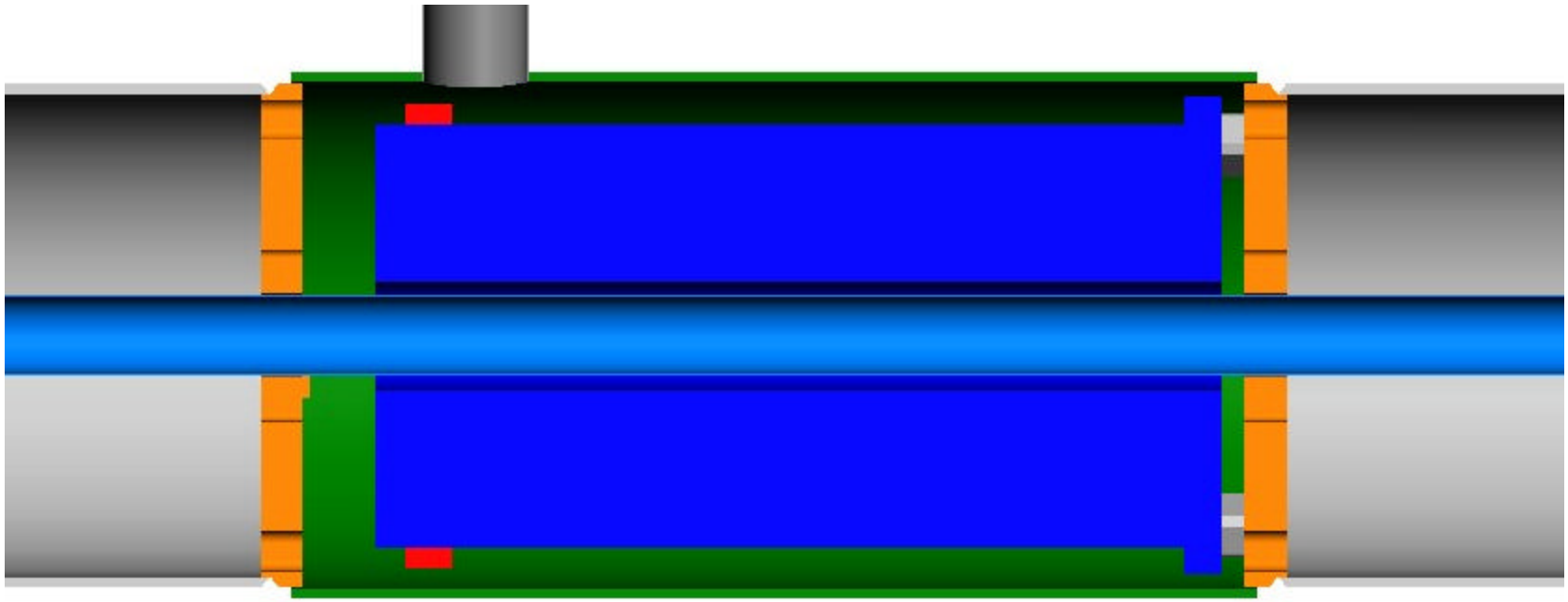

Test Setup

Interconnect Tube

Test Setup Schematic

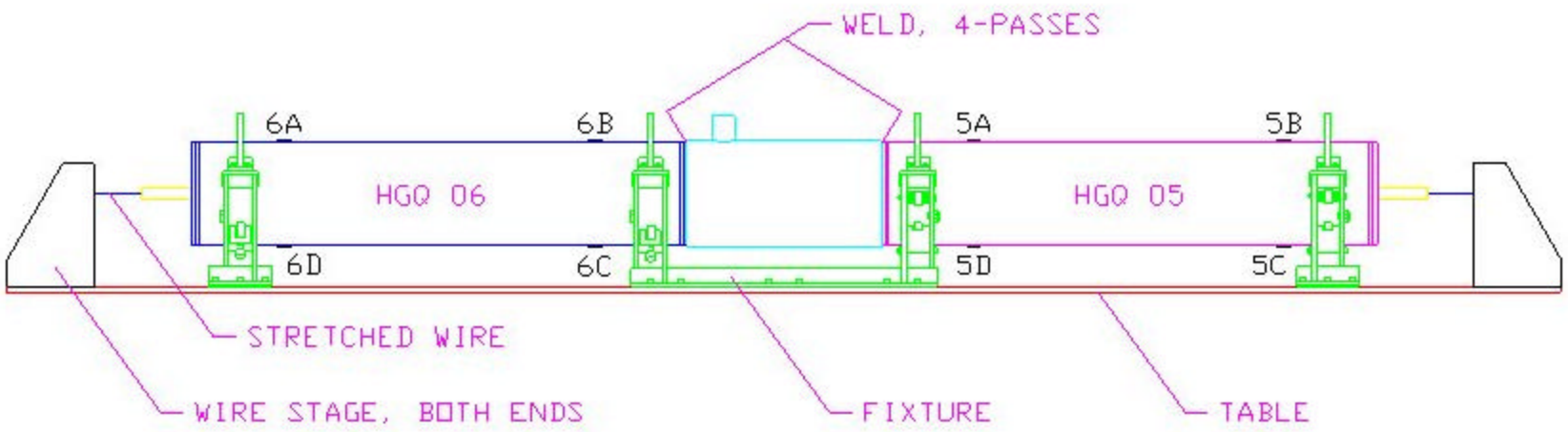

Weld Test Results

	Relative change (measurement)	*AP Requirement*
Q2A/Q2B transverse alignment	0.480 mm	0.500 mm
Q2A/Q2B relative roll	0.152 mrad	1 mrad
Q2A/Q2B relative pitch and yaw	pitch: 284 μrad	100 μrad
	yaw: 281 μrad	

Weld Stripes
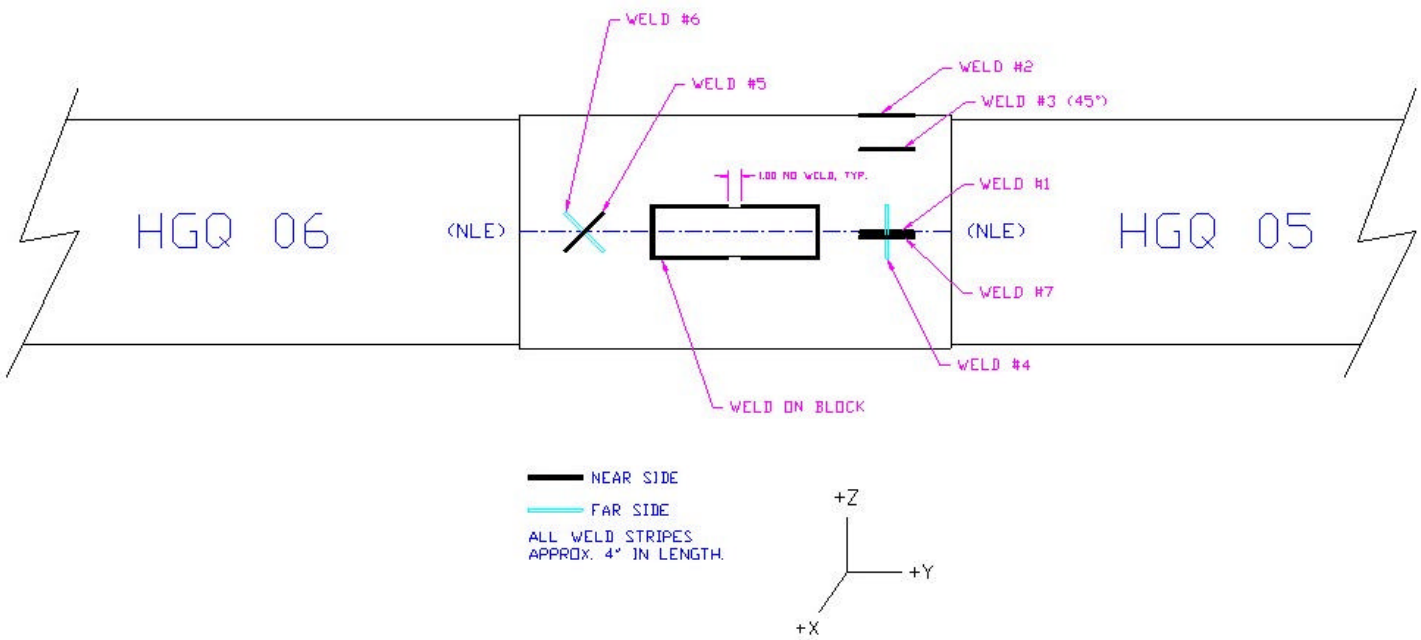
- Able to move cold mass by as much as 0.008”