CERN
CH-1211 Geneva 23
Switzerland

the
Large Hadron Collider
project

LHC Project Document No.
LHC-DFBX-ES-0240.00 rev 1.1

CERN Div./Group or Supplier/Contractor Document No.
LBNL LH 20 00

EDMS Document No.
323251

Date:7 November 2001

Interface Specification

DFBX TO QRL

Abstract

This specification establishes the detailed interface requirements between the DFBX and the LHC cryogenic distribution line QRL. This specification applies to all DFBX located at IR1 (left and right), IR2 (left and right), IR5 (left and right), and IR8 (left and right).

Prepared by :	***Checked by :***	***Approved by:***
J. Zbasnik AFRD/LBNL Jzbasnik@lbl.gov	**W. C. Turner** AFRD, LBNL WCTurner@lbl.gov **J. Strait** Fermilab strait@fnal.gov	

History of Changes

Rev. No.	*Date*	*Pages*	*Description of Changes*
1.0	2001-08-23		Initial submission
1.1	2001-11-07	4	Added QRLG_ codes to Section 2.
		5-8	Revised Tables 4.2-1, 4.2-2, 4.3-1 and 4.3-2 to update pipe designations and sizes.
		9	Revised Section 5.2 to indicate ±10 mm of range. Revised Section 5.3 to update radial pipe clearances.
		10	Changed “QQSA” to “JC1” and “QQSB” to “JC2” in the figures
		11	Changed “QQSC” to “ JC1” and “QQSD” to “JC2” in the figures
		12	Changed “QQSA” to “JC1” and “QQSB” to “JC2” in the figures
		13	Changed pipe tolerances from ±1.5 mm to ±2 mm.
		17	Modified Fig 5.4.1-1 to have 30 mm cuff on DFBX side
		18	Modified Fig’s 5.4.1-2 & 5.4.1-3 for 30 mm cuffs on DFBX side
		23	Edited for clarification in Sections 5.4.3 and 5.4.4.
		25	Changed “CRI” to “CERN” in Table 6-1.
		26	Updated References.

Table of Contents

1. INTRODUCTION 4
2. DFBX EQUIPMENT CODES 4
3. CO-ORDINATE SYSTEM 4
4. CRYOGENICS 5
4.1 INTERFACE PIPE SIZES 5
4.2 VALVE CONTROL INPUTS 6
4.3 DFBX CRYOGENIC SIGNALS 8
5. MECHANICAL INTERFACES 8
5.1 GENERAL CONFIGURATION 8
5.2 ADJUSTMENT CAPABILITY 9
5.3 JUMPER CROSS SECTIONS 9
5.4 INTERFACE DETAILS 13
5.4.1 CRYOGENIC PIPING 13
5.4.2 CRYOGENIC PIPING SUPPORT POINTS 20
5.4.3 THERMAL RADIATION SHIELDS 23
5.4.4 JUMPER VACUUM VESSELS 23
6. INSTALLATION PROCEDURES AND MATERIALS 24
7. DRAWINGS 26
8. REFERENCES 26
9. APPENDIX A – DEFINITION OF DFBX LOCAL COORDINATES 26

1. INTRODUCTION

This specification establishes the detailed interface requirements between the DFBX and the LHC cryogenic distribution line QRL. This specification applies to all DFBX located at IR1 (left and right), IR2 (left and right), IR5 (left and right), and IR8 (left and right).

2. DFBX EQUIPMENT CODES

Because each of the eight DFBX may have a unique design, the following equipment codes have been adopted facilitating a direct application of the LHC documentation system. In the table, "IRnR" signifies the right side of the Interaction Point n, and "IRnL" signifies the left side of Interaction Point n. The corresponding QRLG variant [1] is also listed in the table.

Location	IR1 L	IR1 R	IR2 L	IR2 R	IR5 L	IR5 R	IR8 L	IR8 R
DFBX_	DFBXA	DFBXB	DFBXC	DFBXD	DFBXE	DFBXF	DFBXG	DFBXH
QRLG_	QRLGA	QRLGC	QRLGF	QRLGE	QRLGD	QRLGB	QRLGF	QRLGE

3. CO-ORDINATE SYSTEM

The local coordinate systems used in this specification are given in the DFBX General Interfaces Specification [2], and shown in Appendix A.

The origins of the DFBX local coordinate systems with respect to the CERN global coordinates are listed in Table 3-1. In deriving these locations we use the referenced CERN drawing and a flange to flange separation between the DFBX and the LQX of 510 mm [3].

Table 3-1. Position of DFBX Local Coordinate Systems

Code	Distance (mm) from IP	CERN Dwg. No.	Dwg. Ref. List
DFBXA	55052 Left of IP1	LHCLSX__0001E	[a]
DFBXB	55052 Right of IP1	LHCLSX__0002E	[b]
DFBXC	55052 Left of IP2	LHCLSX__0003E	[c]
DFBXD	55052 Right of IP2	LHCLSX__0004E	[d]
DFBXE	55052 Left of IP5	LHCLSX__0009E	[e]
DFBXF	55052 Right of IP5	LHCLSX__0010E	[f]
DFBXG	55052 Left of IP8	LHCLSX__0015E	[g]
DFBXH	55052 Right of IP8	LHCLSX__0016E	[h]

4. CRYOGENICS

FLOW SCHEMATICS

The flow schematics for all DFBX covered under this specification are presented on Drawing LHCDFBX_0001 [i]. The latest version will be found in the CDD.

4.1 INTERFACE PIPE SIZES

The interface piping diameters are based on providing sufficient mass flow rate for cooldown and operational heat removal, rounded upwards to the nearest standard QRL pipe size. They are shown in the website http://vanweeld.home.cern.ch/vanweeld/insertions/piping/jumperpiping.html; in Tables 4.2-1 and 4.2-2 we list the interface diameters given in this website as well as the pipe size on the DFBX side of the interface.

Table 4.2-1. Cryogenic Piping for DFBXA, DFBXB, DFBXE, and DFBXF

Pipe[d]	Function	Interface[a] Pipe ID (mm)	DFBX Pipe ID (mm)
CC'1 (CS)	Lead Box Supply	10	13.4
CC'2 (CC')	TAS & VSS[b] Supply	10	13.4
CC'3 (KD)	TAS & VSS[b] Return	10	13.4
CY1 (CY)	MQX 1.9 K Liquid Supply	10	13.4
KD2 (TD)	20K, Spare TAS and possible VSS[c] return	10	13.4
DH (DH)	20 K Lead Supply, Lead Box Return	20	22.1
E1 (EE)	Thermal Shield Supply	15.2	34.8
E2 (FF)	Thermal Shield Return	15.2	34.8
LD1 (LD1)	Cooldown & Fill Supply, Safety Relief	50	42
LD2 (LD2)	Cooldown & Fill Return, Safety Relief	50	42
XB (XB)	1.9 K Gaseous Return	70	85.6

Notes: a. From http://vanweeld.home.cern.ch/vanweeld/insertions/piping/jumperpiping.html;

b. VSS in DFBX Bore Tube

c. VSS in LQX

d. Pipes in () are QRL nomenclature [4]

Table 4.2-2. Cryogenic Piping for DFBXC, DFBXD, DFBXG, and DFBXH

Pipe[c]	Function	Interface[a] Pipe ID (mm)	DFBX Pipe ID (mm)
CC'1 (CS)	Lead Box Supply	10	13.4
CC'2 (CC')	VSS[b] Supply	10	13.4
CC'3 (KD)	VSS[b] Return	10	13.4
CY1 (CY1)	MQX 1.9 K Liquid Supply	10	13.4
CY2 (CY2)	MBX 1.9 K Liquid Supply	10	13.4
DH (DH)	20 K Lead Supply, Lead Box Return	20	22.1
E1 (EE)	Thermal Shield Supply	15.2	34.8
E2 (FF)	Thermal Shield Return	15.2	34.8
LD1 (LD1)	Cooldown & Fill Supply, Safety Relief	50	42
LD2 (LD2)	Cooldown & Fill Return, Safety Relief	50	42
LD3 (LD3)	Safety Relief	50	42
XB (XB)	1.9 K Gaseous Return	60	59.3

Notes: a. From http://vanweeld.home.cern.ch/vanweeld/insertions/piping/jumperpiping.html

b. VSS in both D1 and DFBX Bore Tubes

c. Pipes in () are QRL nomenclature [4]

4.2 VALVE CONTROL INPUTS

For each pipe connected to the QRL we list the valve(s) connected to it, if any, and the sensors that provide valve control signals. All valves are in the QRL and provided by CERN. The nomenclature is consistent with the cryogenic flow schematics in LHCDFBX_0001 [i].

Table 4.3-1. Valve Control Inputs for DFBXA, DFBXB, DFBXE, and DFBXF

Pipe[a]	Valve[b]	Control Signal for Normal Operation	Control Signal for Fault Condition
CC'1 (CS)	CV930	LTxxx (in DFBX)	PTxxx (in DFBX)
CC'2 (CC')	none	Not Applicable	Not Applicable
CC'3 (KD)	CV947	TT947, TT948 (in QRL)	Not Applicable
KD2 (TD)	CV941	TTxxx	Not Applicable
CY1 (CY1)	CV910 CV915	TTxxx (in MQX) TTxxx (in MQX)	MQX Quench MQX Quench
DH (DH)	PV930	Normally Open	PT991 (in QRL)
E1 (EE)	none	Not Applicable	Not Applicable
E2 (FF)	CV950	TT950, TT951 (in QRL)	Not Applicable
LD1 (LD1)	CV920	For Cooldown,TTxxx (in MQX) and PTxxx (in DFBX) Otherwise, Normally Closed	Not Applicable
	QV920	Normally Closed	Pressure in LD1 line
LD2 (LD2)	QV923	Open for Cooldown Normally Closed	Pressure in LD2 line
XB (XB)	none	Not Applicable	Not Applicable

Notes: a. Pipes in () are QRL nomenclature [4]
b. Valve designation per [4]

Table 4.3-2. Valve Control Inputs for DFBXC, DFBXD, DFBXG, and DFBXH

Pipe[a]	Valve[b]	Control Signal for Normal Operation	Control Signal for Fault Condition
CC'1 (CS)	CV930	LTxxx (in DFBX)	PTxxx (in DFBX)
CC'2 (CC')	none	Not Applicable	Not Applicable
CC'3 (KD)	CV947	TT947, TT948 (in QRL)	Not Applicable
CY1 (CY1)	CV910	TTxxx (in MQX)	MQX or MBX Quench
	CV915	TTxxx (in MQX)	MQX or MBX Quench
CY2 (CY2)	CV911	TTxxx (in MBX)	MQX or MBX Quench
	CV916	TTxxx (in MBX)	MQX or MBX Quench
DH (DH)	PV930	Normally Open	PT991 (in QRL)
E1 (EE)	none	Not Applicable	Not Applicable
E2 (FF)	CV950	TT950, TT951 (in QRL)	Not Applicable
LD1 (LD1)	CV920	For cooldown, TTxxx (in MBX & MQX) and PTxxx (in DFBX) Otherwise, Normally Closed	Not Applicable
	QV920	Normally Closed	Pressure in LD1 Line
LD2 (LD2)	QV927	Open for Cooldown, Otherwise Normally Closed	Pressure in LD2 Line
LD3 (LD3)	QV927	Normally Closed	Pressure in LD3 Line
XB (XB)	none	Not Applicable	Not Applicable

Notes: a. Pipes in () are QRL nomenclature [4]
b. Valve designation per [4]

4.3 DFBX CRYOGENIC SIGNALS

The DFBX contains sensors that can be used to provide supplemental information on the cryogenic condition of the DFBX. These are seen on the cryogenic flow schematic and include temperature sensors on the 1.9K liquid supply, temperature sensors on the HTS lead upper end cooling, and temperature sensors in the current lead box.

5. MECHANICAL INTERFACES

The interfaces in this section refer to the DFBX configuration at the time of installation in the LHC tunnel.

5.1 GENERAL CONFIGURATION

Each DFBX has two jumpers, one on each end, which connect to the QRL.

At IR1 and IR5 the jumpers are designated QQSA and QQSB, where QQSA is located on the LQX end and QQSB is on the MBW end.

At IR 2 and IR8 the jumpers are designated QQSC and QQSD, where QQSC is on the LQX end and QQSD is on the LBX end.

In addition to the cryogenic piping listed in Section 4.2, each jumper connection between DFBX and QRL contains a thermal radiation shield, Multi-Layer Insulation, and is surrounded by a vacuum-tight enclosure. Each jumper has a vacuum barrier on the QRL side to separate the insulating vacuum of the QRL from the insulating vacuum of the DFBX and Inner triplet magnets.

5.2 ADJUSTMENT CAPABILITY

The inner triplet magnets and DFBX may need to be repositioned to maintain proper LHC operation. The design range of adjustment of the DFBX is [5]:

X: ? 10 mm,

Y: ? 10 mm,

Z: ? 10 mm.

The QRL will not be moved during these adjustments.

CERN is considering the installation of a monitor across the vacuum closure bellows that will provide a visual indication of the remaining adjustment capability of the connection. This will most likely be attached by welding after completion of the interconnection to the QRL.

5.3 JUMPER CROSS SECTIONS

Figures 5.3-1 through 5.3-6 show interface cross sections and relative y-z coordinates for the DFBX side of the interface. The jumpers for DFBX on opposite sides of an IP have mirror symmetry about the IP. All radial clearances exceed 50 mm except LD1/LD2 – E1 (48 mm) and LD1/LD2 – XB (46 mm). These radial clearances are sufficient to allow the use of orbital welding and cutting equipment.

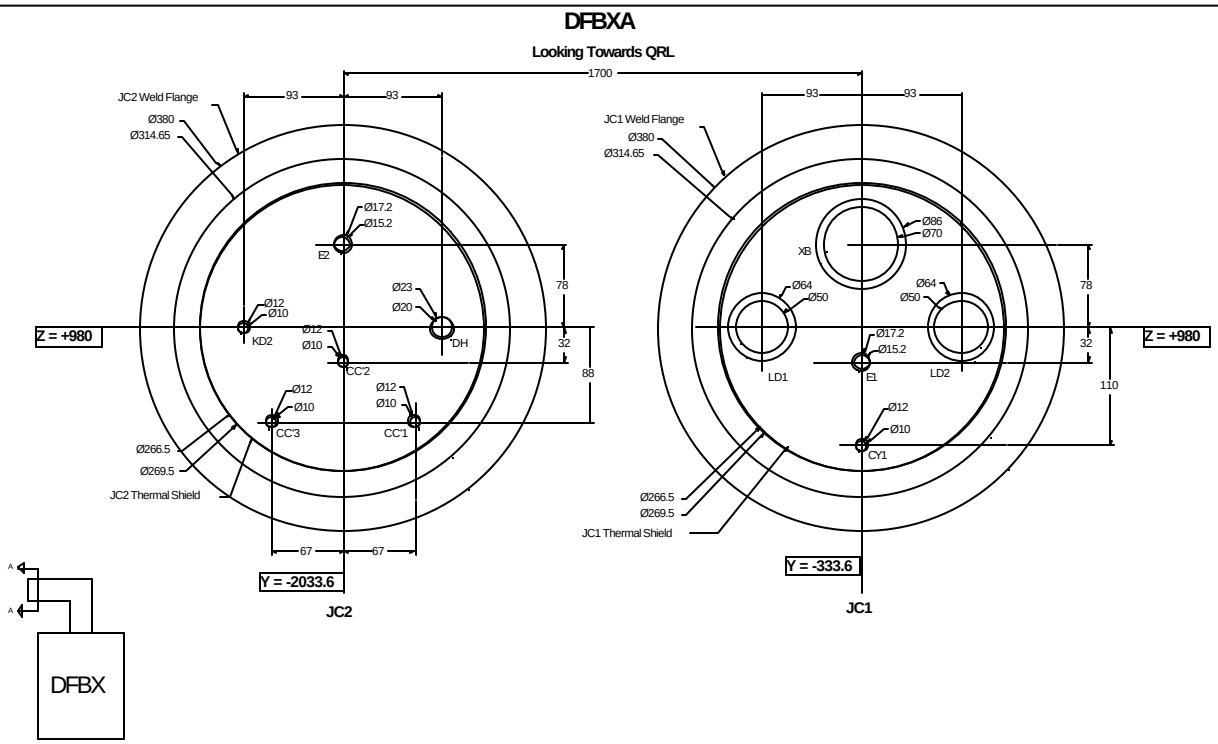

Figure 5.3-1. Interface Features of Jumpers for DFBXA (IR1L).

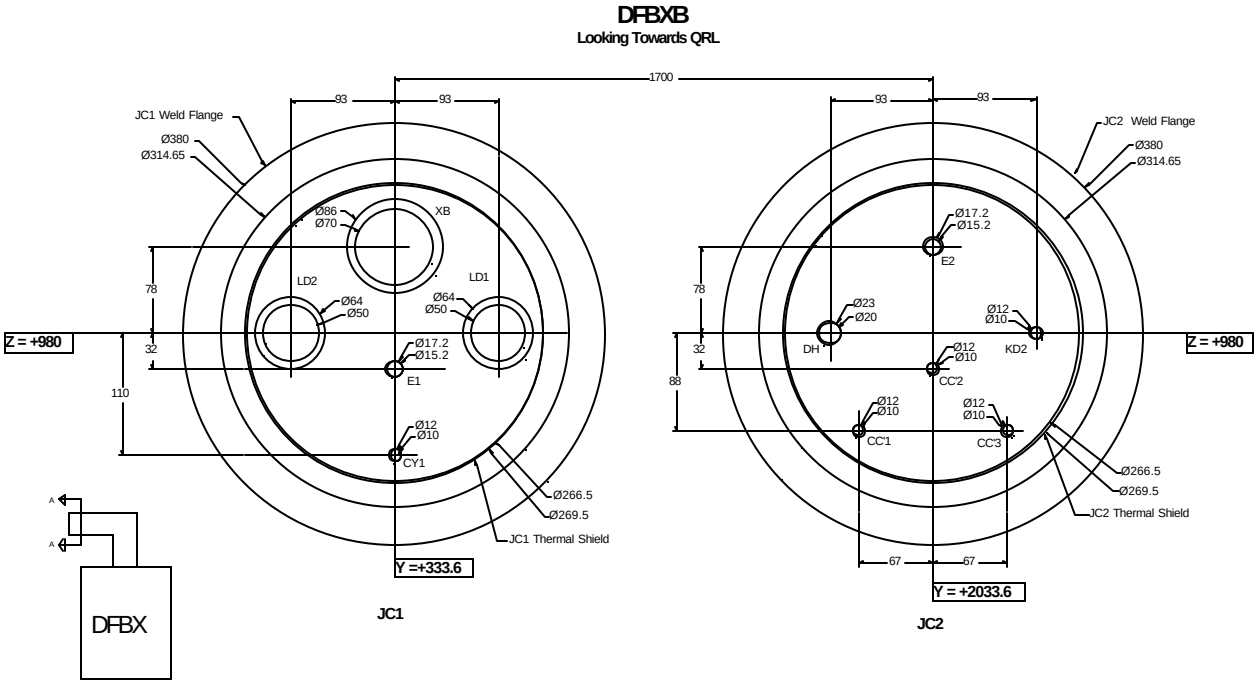

Figure 5.3-2. Interface Features of Jumpers for DFBXB (IR1R).

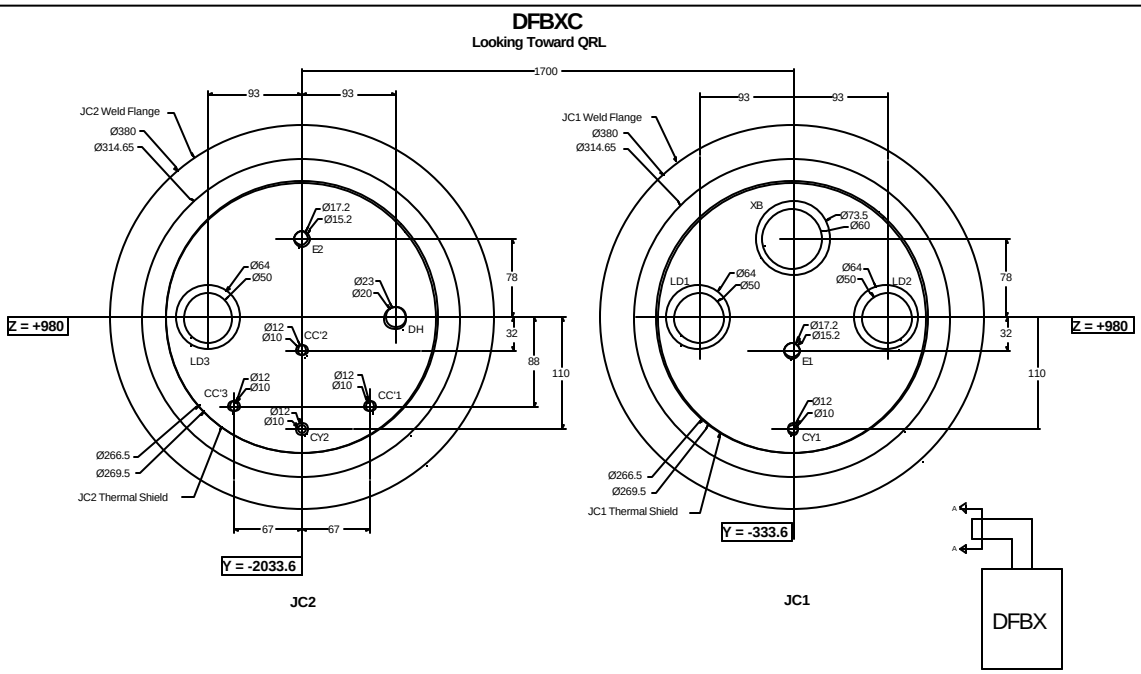

Figure 5.3-3. Interface Features of Jumpers for DFBXC (IR2L) and DFBXG (IR8L).

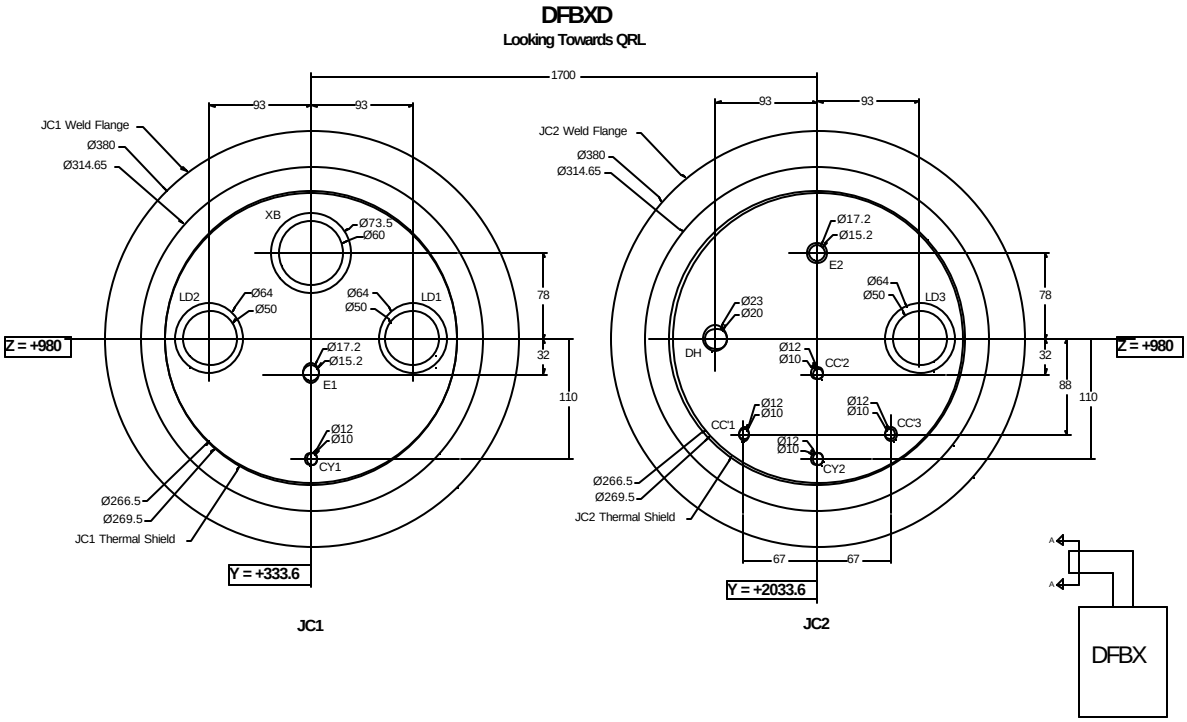

Figure 5.3-4. Interface Features of Jumpers for DFBXD (IR2R) and DFBXH (IR8R).

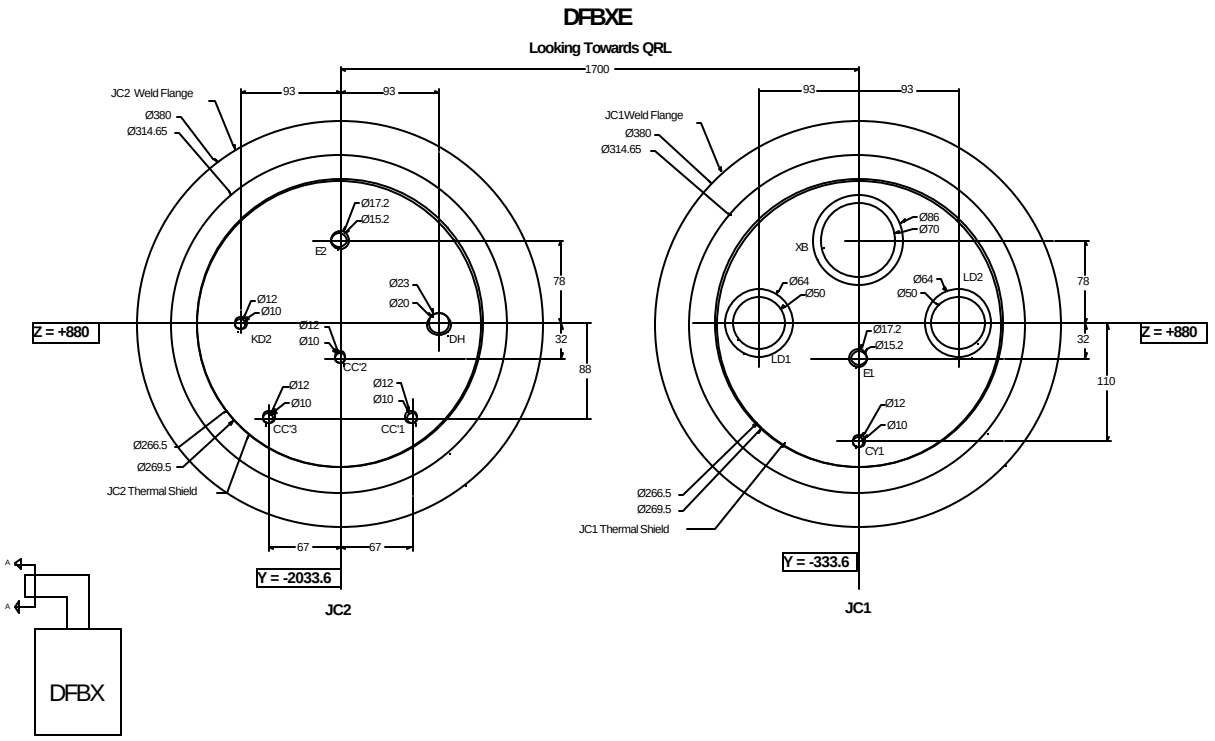

Figure 5.3-5. Interface Features of Jumpers for DFBXE (IR5L).

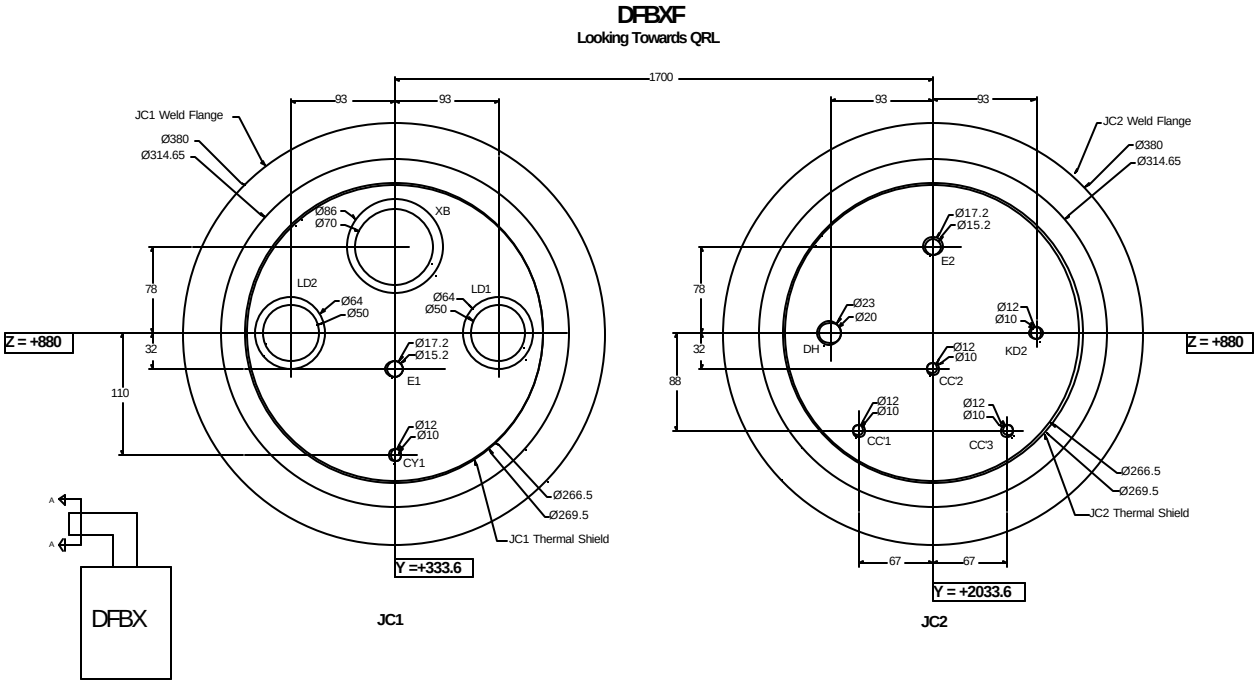

Figure 5.3-6. Interface Features of Jumpers for DFBXF (IR5R).

5.4 INTERFACE DETAILS

5.4.1 CRYOGENIC PIPING

The DFBX piping generally consists of pipes and tubes in nominal inch dimensions, with transitions to metric tubing or flanges to allow for easy connection to the QRL. The six transitions used in making connections to QRL piping are shown in Figures 5.4-1 through 5.4.1-6. The feature on the end of the DFBX piping nearest the QRL is considered to be the interface point in this specification. The coordinates of the cryogenic piping interface features for the 8 DFBX are listed in Tables 5.4.1-1 through 5.4.1-8. The X coordinate gives the location of the y-z plane of the end feature, and the y and z coordinates give the location of the feature's centerline.

The tolerances, with respect to the local co-ordinate system defined in Appendix A, on the position of the piping that connects to the QRL are:

X: ? 2 mm, Y: ? 2 mm, Z: ? 2 mm

y-z Interface plane: ? 2? (? 35 mrad) with respect to the feature centerline.

These pipes will be individually covered with 10 layers of Multi-Layer insulation to reduce heat load to the cryogenic circuits. Refer to Section 6 for details on the interface materials and responsibilities.

Table 5.4.1-1. Interface Coordinates and Configuration of Cryogenic Piping for DFBXA.

	Pipe	X	Y	Z	Interconnection Figure
QQSA	XB	-301	-333.6	1058	5.4.1-1
	LD1	-301	-426.6	980	5.4.1-3
	LD2	-301	-240.6	980	5.4.1-3
	E1	-367	-333.6	948	5.4.1-4
	CY1	-367	-333.6	870	5.4.1-6
QQSB	E2	-367	-2033.6	1058	5.4.1-4
	DH	-367	-1940.6	980	5.4.1-5
	CC'1	-367	-1966.6	892	5.4.1-6
	CC'2	-367	-2033.6	948	5.4.1-6
	CC'3	-367	-2100.6	892	5.4.1-6
	KD2	-367	-2126.6	980	5.4.1-6

Table 5.4.1-2. Interface Coordinates and Configuration of Cryogenic Piping for DFBXB.

	Pipe	X	Y	Z	Interconnection Figure
QQSA	XB	-301	333.6	1058	5.4.1-1
	LD1	-301	426.6	980	5.4.1-3
	LD2	-301	240.6	980	5.4.1-3
	E1	-367	333.6	948	5.4.1-4
	CY1	-367	333.6	870	5.4.1-6
QQSB	E2	-367	2033.6	1058	5.4.1-4
	DH	-367	1940.6	980	5.4.1-5
	CC'1	-367	1966.6	892	5.4.1-6
	CC'2	-367	2033.6	948	5.4.1-6
	CC'3	-367	2100.6	892	5.4.1-6
	KD2	-367	2126.6	980	5.4.1-6

Table 5.4.1-3. Interface Coordinates and Configuration of Cryogenic Piping for DFBXC.

	Pipe	X	Y	Z	Interconnection Figure
QQSC	XB	-301	-333.6	1058	5.4.1-2
	LD1	-301	-426.6	980	5.4.1-3
	LD2	-301	-240.6	980	5.4.1-3
	E1	-367	-333.6	948	5.4.1-4
	CY1	-367	-333.6	870	5.4.1-6
QQSD	E2	-367	-2033.6	1058	5.4.1-4
	DH	-367	-1940.6	980	5.4.1-5
	LD3	-301	-2126.6	980	5.4.1-3
	CY2	-367	-2033.6	870	5.4.1-6
	CC'1	-367	-1966.6	892	5.4.1-6
	CC'2	-367	-2033.6	948	5.4.1-6
	CC'3	-367	-2100.6	892	5.4.1-6

Table 5.4.1-4. Interface Coordinates and Configuration of Cryogenic Piping for DFBXD.

	Pipe	X	Y	Z	Interconnection Figure
QQSC	XB	-301	333.6	1058	5.4.1-2
	LD1	-301	426.6	980	5.4.1-3
	LD2	-301	240.6	980	5.4.1-3
	E1	-367	333.6	948	5.4.1-4
	CY1	-367	333.6	870	5.4.1-6
QQSD	E2	-367	2033.6	1058	5.4.1-4
	DH	-367	1940.6	980	5.4.1-5
	LD3	-301	2126.6	980	5.4.1-3
	CY2	-367	2033.6	870	5.4.1-6
	CC'1	-367	1966.6	892	5.4.1-6
	CC'2	-367	2033.6	948	5.4.1-6
	CC'3	-367	2100.6	892	5.4.1-6

Table 5.4.1-5. Interface Coordinates and Configuration of Cryogenic Piping for DFBXE.

	Pipe	X	Y	Z	Interconnection Figure
QQSA	XB	-301	-333.6	958	5.4.1-1
	LD1	-301	-426.6	880	5.4.1-3
	LD2	-301	-240.6	880	5.4.1-3
	E1	-367	-333.6	848	5.4.1-4
	CY1	-367	-333.6	770	5.4.1-6
QQSB	E2	-367	-2033.6	958	5.4.1-4
	DH	-367	-1940.6	880	5.4.1-5
	CC'1	-367	-1966.6	792	5.4.1-6
	CC'2	-367	-2033.6	848	5.4.1-6
	CC'3	-367	-2100.6	792	5.4.1-6
	KD2	-367	-2126.6	880	5.4.1-6

Table 5.4.1-6. Interface Coordinates and Configuration of Cryogenic Piping for DFBXF.

	Pipe	X	Y	Z	Interconnection Figure
QQSA	XB	-301	333.6	958	5.4.1-1
	LD1	-301	426.6	880	5.4.1-3
	LD2	-301	240.6	880	5.4.1-3
	E1	-367	333.6	848	5.4.1-4
	CY1	-367	333.6	770	5.4.1-6
QQSB	E2	-367	2033.6	958	5.4.1-4
	DH	-367	1940.6	880	5.4.1-5
	CC'1	-367	1966.6	792	5.4.1-6
	CC'2	-367	2033.6	848	5.4.1-6
	CC'3	-367	2100.6	792	5.4.1-6
	KD2	-367	2126.6	880	5.4.1-6

Table 5.4.1-7. Interface Coordinates and Configuration of Cryogenic Piping for DFBXG.

	Pipe	X	Y	Z	Interconnection Figure
QQSC	XB	-301	-333.6	1058	5.4.1-2
	LD1	-301	-426.6	980	5.4.1-3
	LD2	-301	-240.6	980	5.4.1-3
	E1	-367	-333.6	948	5.4.1-4
	CY1	-367	-333.6	870	5.4.1-6
QQSD	E2	-367	-2033.6	1058	5.4.1-4
	DH	-367	-1940.6	980	5.4.1-5
	LD3	-301	-2126.6	980	5.4.1-3
	CY2	-367	-2033.6	870	5.4.1-6
	CC'1	-367	-1966.6	892	5.4.1-6
	CC'2	-367	-2033.6	948	5.4.1-6
	CC'3	-367	-2100.6	892	5.4.1-6

Table 5.4.1-8. Interface Coordinates and Configuration of Cryogenic Piping for DFBXH.

	Pipe	X	Y	Z	Interconnection Figure
QQSC	XB	-301	333.6	1058	5.4.1-2
	LD1	-301	426.6	980	5.4.1-3
	LD2	-301	240.6	980	5.4.1-3
	E1	-367	333.6	948	5.4.1-4
	CY1	-367	333.6	870	5.4.1-6
QQSD	E2	-367	2033.6	1058	5.4.1-4
	DH	-367	1940.6	980	5.4.1-5
	LD3	-301	2126.6	980	5.4.1-3
	CY2	-367	2033.6	870	5.4.1-6
	CC'1	-367	1966.6	892	5.4.1-6
	CC'2	-367	2033.6	948	5.4.1-6
	CC'3	-367	2100.6	892	5.4.1-6

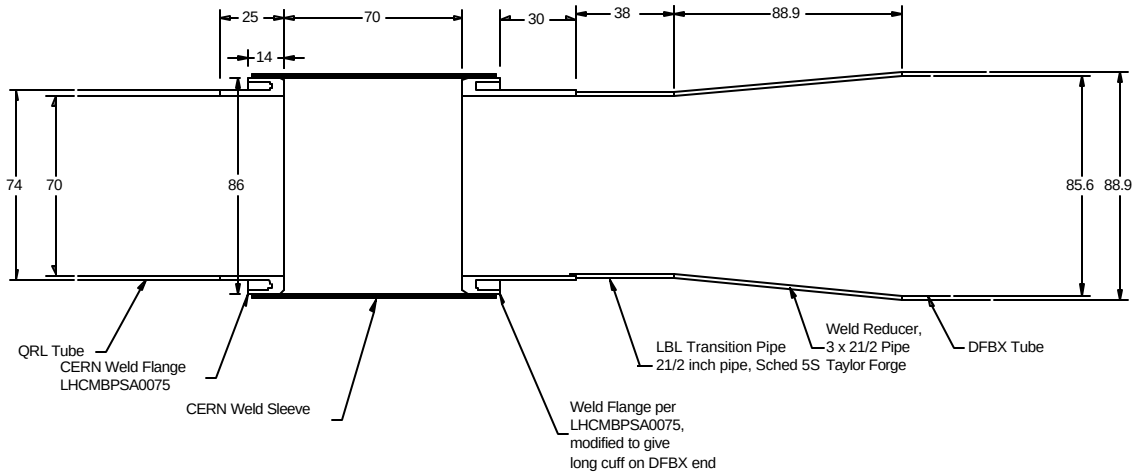

Figure 5.4.1-1. Interconnection of Larger XB line

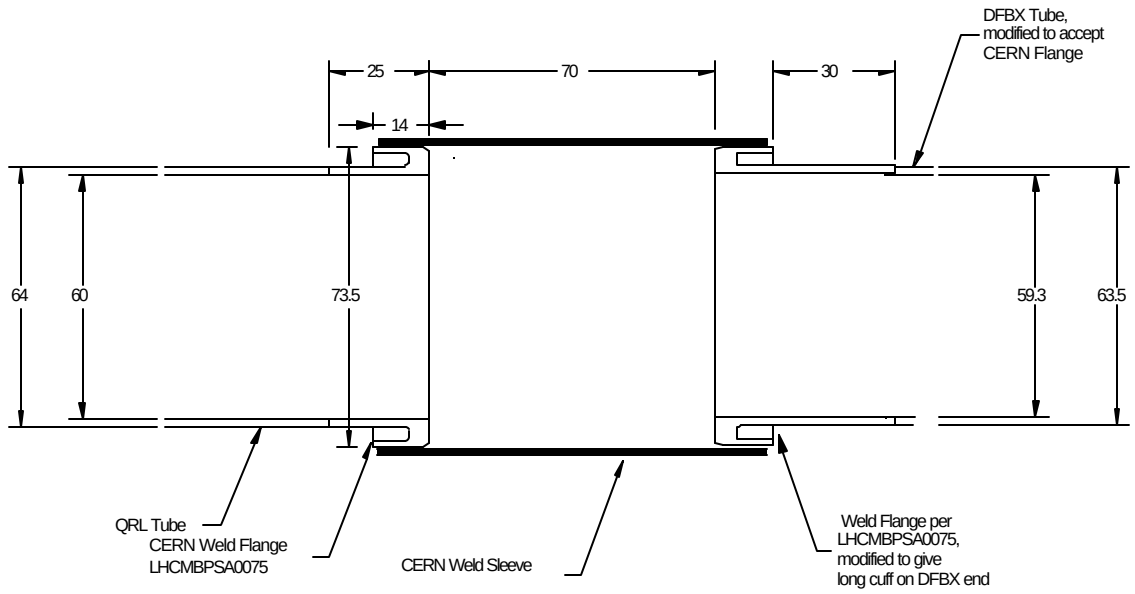

Figure 5.4.1-2. Interconnection of Smaller XB line

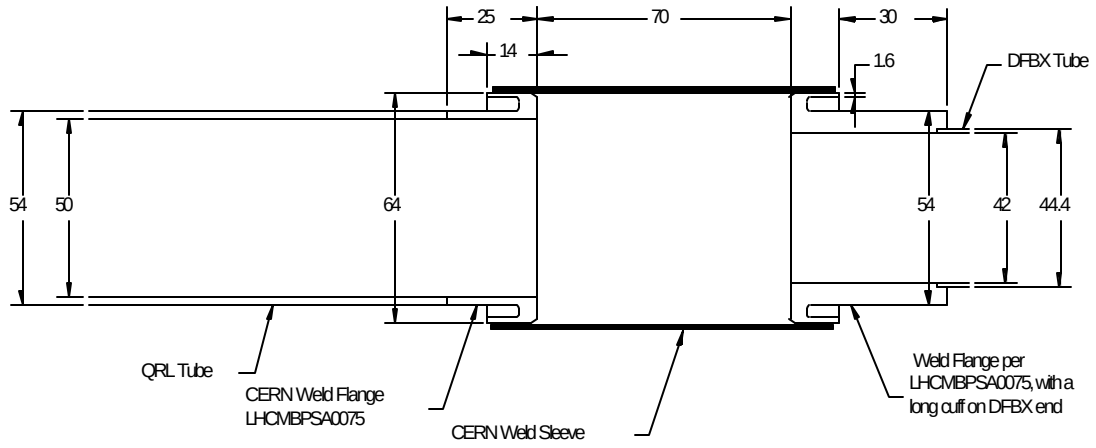

Figure 5.4.1-3. Interconnection of LD line

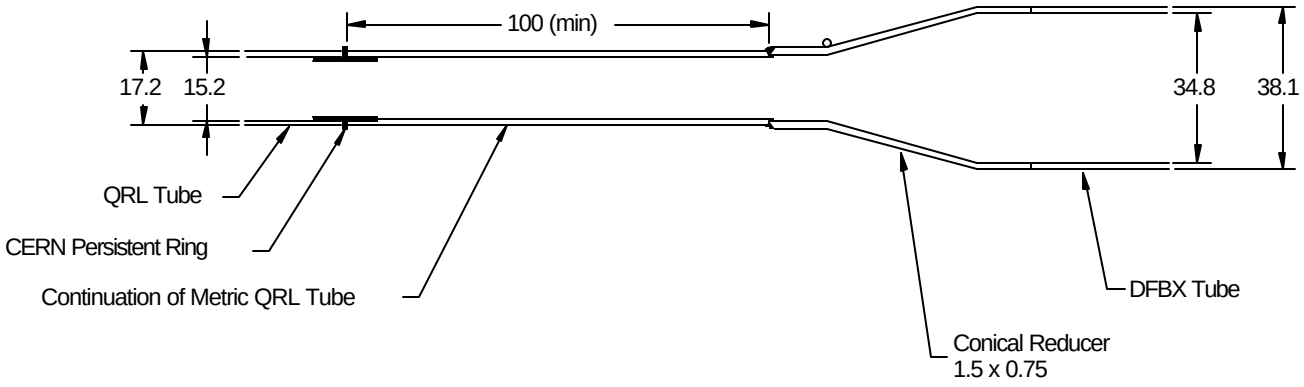

Figure 5.4.1-4. Interconnection of E line

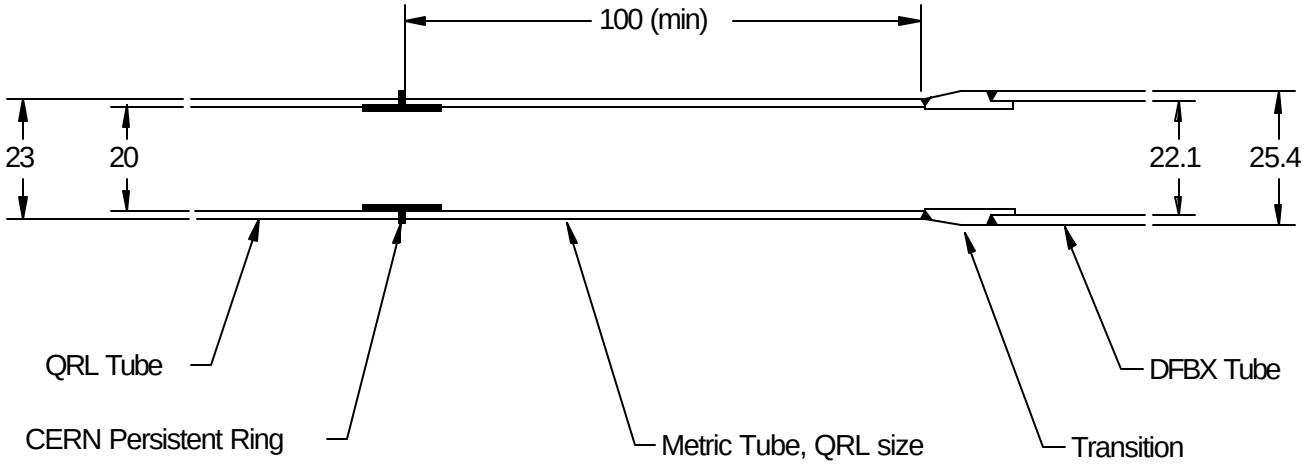

Figure 5.4.1-5. Interconnection of DH line

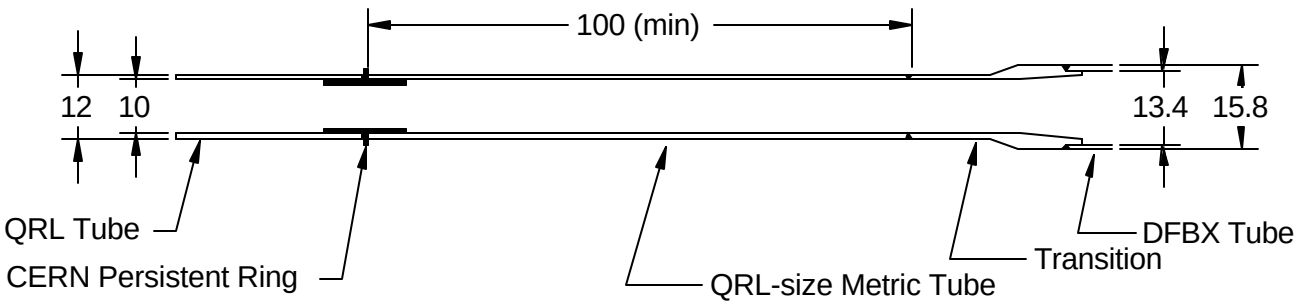

Figure 5.4.1-6. Interconnection of CY and CC' lines

5.4.2 CRYOGENIC PIPING SUPPORT POINTS

The vertical runs of the cryogenic piping from the feedbox to the QRL are laterally supported by G-10 spiders to constrain pipe motion. The coordinates of the support points are listed in the following tables.

Table 5.4.2-1. Coordinates of Cryogenic Piping Fixed Points for DFBXA

	Pipe	X	Y	Z-position of G-10 spider
QQSA	XB	+70.0	-333.6	+575
	LD1	0.0	-426.6	+575
	LD2	-42.8	-240.6	+575
	E1	-81.3	-283.6	+575
	CY1	0.0	-269.5	+575
QQSB	E2	0.0	-2033.6	+220
	DH	+58.7	-1940.6	+220
	CC'1	-65.0	-2001.2	+220
	CC'2	-82.8	-2033.6	+220
	CC'3	+79.9	-2100.6	+220
	KD2	0.0	-2126.6	+220

Table 5.4.2-2. Coordinates of Cryogenic Piping Fixed Points for DFBXB

	Pipe	X	Y	Z-position of G-10 spider
QQSA	XB	70.0	333.6	+575
	LD1	-46.1	426.6	+575
	LD2	48.6	240.6	+575
	E1	1.2	405.5	+575
	CY1	0.0	333.6	+575
QQSB	E2	0.0	0.0	+220
	DH	+58.7	1940.6	+220
	CC'1	-64.9	2001.2	+220
	CC'2	+79.9	2100.6	+220
	CC'3	-79.9	2100.6	+220
	KD2	0.0	2126.6	+220

Table 5.4.2-3. Coordinates of Cryogenic Piping Fixed Points for DFBXC and DFBXG

	Pipe	X	Y	Z-position of G-10 spider
QQSC	XB	70.0	-333.6	+575
	LD1	0.0	-426.6	+575
	LD2	-42.8	-240.6	+575
	E1	-81.3	-283.6	+575
	CY1	0.0	-269.5	+575
QQSD	E2	0.0	-2033.6	+220
	DH	58.7	-1940.6	+220
	LD3	102.0	-2033.6	+220
	CY2	-81.6	-2069.5	+220
	CC'1	-64.9	-2001.2	+220
	CC'2	+97.2	-2086.6	+220
	CC'3	+58.8	-2100.6	+220

Table 5.4.2-4. Coordinates of Cryogenic Piping Fixed Points for DFBXD and DFBXH

	Pipe	X	Y	Z-position of G-10 spider
QQSC	XB	70.0	333.6	+575
	LD1	-9.4	426.6	+575
	LD2	-42.8	240.6	+575
	E1	-81.3	283.6	+575
	CY1	0.0	269.5	+575
QQSD	E2	0.0	2033.6	+220
	DH	+67.7	1977.2	+220
	LD3	+102.0	2033.6	+220
	CY2	-81.6	2069.5	+220
	CC'1	-64.9	2001.2	+220
	CC'2	+97.2	2086.6	+220
	CC'3	+58.8	2100.6	+220

Table 5.4.2-5. Coordinates of Cryogenic Piping Fixed Points for DFBXE

	Pipe	X	Y	Z-position of G-10 spider
QQSA	XB	+70.0	-333.6	+575
	LD1	-46.1	-426.6	+575
	LD2	+48.6	-240.6	+575
	E1	-1.2	-405.5	+575
	CY1	0.0	-333.6	+575
QQSB	E2	0.0	-2033.6	+220
	DH	+58.7	-1940.6	+220
	CC'1	-64.9	-2001.2	+220
	CC'2	-64.9	-2066.0	+220
	CC'3	+79.9	-2100.6	+220
	KD2	0.0	-2126.6	+220

Table 5.4.2-6. Coordinates of Cryogenic Piping Fixed Points for DFBXF

	Pipe	X	Y	Z-position of G-10 spider
QQSA	XB	+70.0	333.6	+575
	LD1	0.0	426.6	+575
	LD2	-42.8	240.6	+575
	E1	-81.3	283.6	+575
	CY1	0.0	269.5	+575
QQSB	E2	0.0	2033.6	+220
	DH	58.7	1974.9	+220
	CC'1	-64.9	2001.2	+220
	CC'2	-82.8	2033.6	+220
	CC'3	+67.0	2100.6	+220
	KD2	0.0	2126.6	+220

5.4.3 THERMAL RADIATION SHIELDS

The DFBX thermal radiation shields will terminate at x = -253 mm. A shield bridge in a clamshell arrangement will attach to the DFBX shield and extend to within 50 mm of the QRL jumper radiation shields.

The DFBX thermal radiation shields will be covered with 30 layers of multi layer insulation (MLI) which terminate at x = -240 mm. The thermal shield bridge will be covered with 30 layers of multilayer insulation.

Details of the connections between DFBX thermal shields and between MLI blankets across the QRL interconnection region are not yet finalized.

5.4.4 JUMPER VACUUM VESSELS

The DFBX vacuum vessels will terminate in weld flanges shown in Figure 5.4.4-1 that allow connection to the QRL. The end flange terminates at x = -223 mm.

Note: The diameter of the jumper vacuum vessel on the DFBX side of the interface is smaller than the corresponding vessel for the SSS.

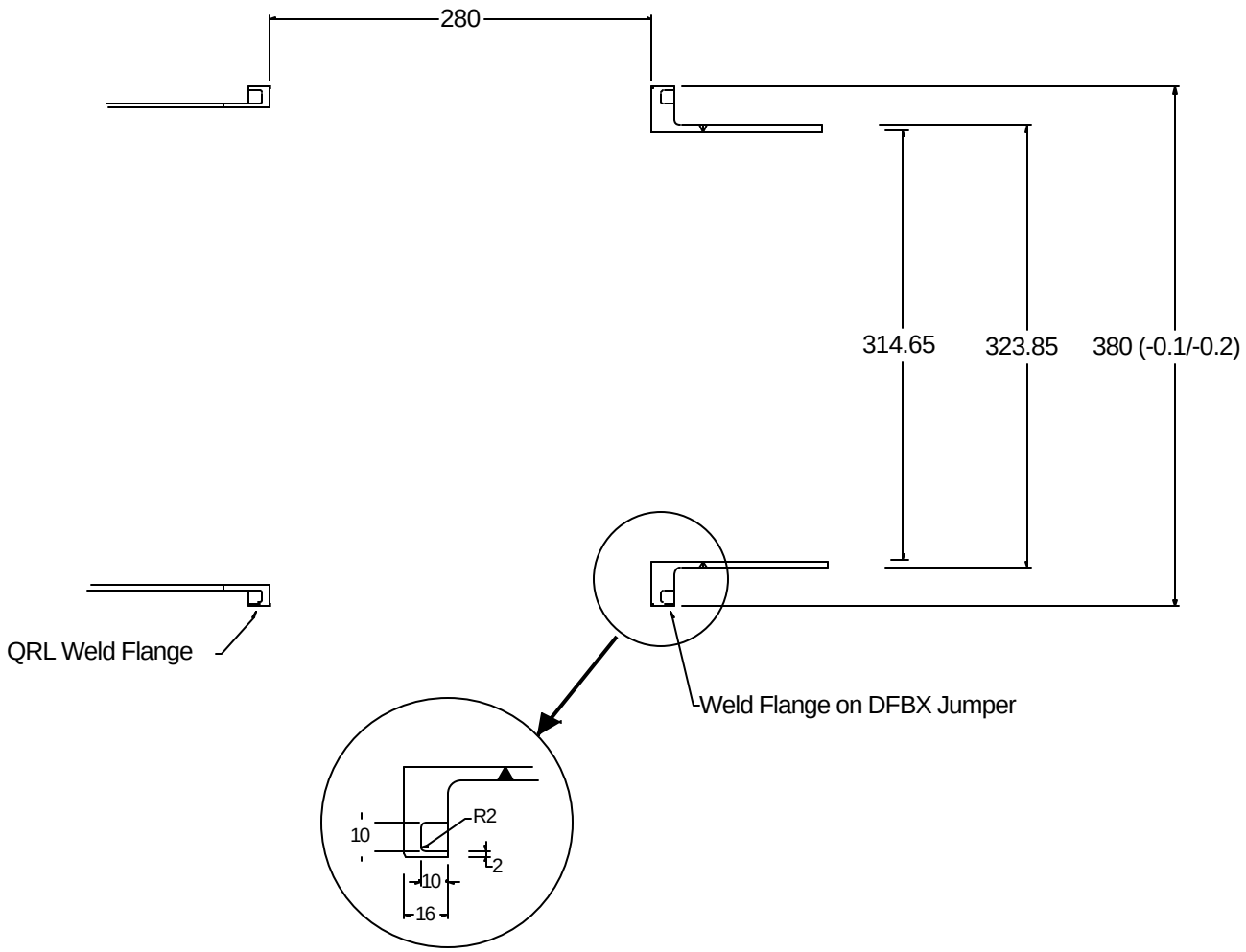

Figure 5.4.4-1 Weld Flange Termination of DFBX Jumper Vacuum Vessels.

6. INSTALLATION PROCEDURES AND MATERIALS

Table 6-1 contains a listing of the interconnect components and the respective responsible party and Table 6-2 contains a listing of the materials for the interconnect components.

Table 6-1. Responsibilities for DFBX-QRL Interconnect Components.

Item	QRL Feature		Interconnect Feature		DFBX Feature	
	Description	**Resp.**	**Description**	**Resp.**	**Description**	**Resp.**
Large XB	Flange, 86/70	ACR	Sleeve, 86	CERN	Flange, 86/70	LBNL
Small XB	Flange, 73.5/60	ACR	Sleeve,73.5	CERN	Flange, 73.5/60	LBNL
LD	Flange, 64/50	ACR	Sleeve, 56	CERN	Flange, 64/50	LBNL
E	Tube end, 17.2/15.2	ACR	Ring, 15.2	CERN	Tube end, 17.2/15.2	LBNL
DH	Tube end, 23/20	ACR	Ring, 20	CERN	Tube end, 23/20	LBNL
CY, CC', KD2	Tube end, 12/10	ACR	Ring, 10	CERN	Tube end, 12/10	LBNL
Shield	? 380 stub	ACR	Shield Bridge	CERN	? 269.5 stub	LBNL
MLI	tbd extension	ACR	As Required	CERN	tbd extension	LBNL
Vacuum Shell	Weld Flange, 380/349.2	ACR	Bellows Assembly	ACR	Weld Flange, 380/314.6	LBNL

Table 6-2. Materials used in DFBX-QRL Interconnect Components.

Item	QRL Feature		Interconnect Feature		DFBX Feature	
	Description	**Mat.**	**Description**	**Mat.**	**Description**	**Mat.**
Large XB	Flange, 86/70	316L	Sleeve, 86	316L	Flange, 86/70	304L
Small XB	Flange, 73.5/60	316L	Sleeve,73.5	316L	Flange, 73.5/60	304L
LD	Flange, 64/50	316L	Sleeve, 56	316L	Flange, 64/50	304L
E	Tube end, 17.2/15.2	316L	Ring, 15.2	316L	Tube end, 17.2/15.2	304L
DH	Tube end, 23/20	316L	Ring, 20	316L	Tube end, 23/20	304L
CY, CC', KD2	Tube end, 12/10	316L	Ring, 10	316L	Tube end, 12/10	304L
Shield	? 380 stub	Cu or Al	Shield Bridge	6000 Al	? 269.5 stub	Cu 101
MLI	tbd extension	tbd	As Required	tbd	tbd extension	tbd
Vacuum Shell	Weld Flange, 380/349.2	304L	Bellows Assembly	304L	Weld Flange, 380/314.6	304L

7. DRAWINGS

a. LHCLSX__0001E, LHC Layout Drawings of Long Straight Sections.
b. LHCLSX__0002E, LHC Layout Drawings of Long Straight Sections.
c. LHCLSX__0003E, LHC Layout Drawings of Long Straight Sections.
d. LHCLSX__0004E, LHC Layout Drawings of Long Straight Sections.
e. LHCLSX__0009E, LHC Layout Drawings of Long Straight Sections.
f. LHCLSX__0010E, LHC Layout Drawings of Long Straight Sections.
g. LHCLSX__0015E, LHC Layout Drawings of Long Straight Sections.
h. LHCLSX__0016E, LHC Layout Drawings of Long Straight Sections.
i. LHCDFBX_0001, DFBX Flow Schematic, LBNL 24C3706.
j. LHCMBPSA0075, Weld Flange.

8. REFERENCES

1. LHC Quality Assurance Instruction, “Naming Conventions for the QRL,” LHC-QRL-QA-0004 rev 1.0, 18 June 2001.
2. LHC Engineering Specification, “Inner Triplet Feedboxes General Interfaces,” LHC-DFBX-ES-0200.00.
3. LHC Engineering Specification, “Interface Specification: Inner Triplet Feedboxes DFBX to LQX,” LHC-DFBX-ES-0210.
4. LHC Technical Specification, “Technical Specification for a Compound Cryogenic Helium Distribution Line for the Large Hadron Collider (LHC),” LHC-QRL-CI-0001 rev 2.0, Appendix E, pp 45-46, 30 May 2001.
5. LHC Engineering Specification, “Inner Triplet Feedboxes DFBX-Tunnel and Alignment Interface,” LHC-DFBX-ES-0260.

9. APPENDIX A – DEFINITION OF DFBX LOCAL COORDINATES

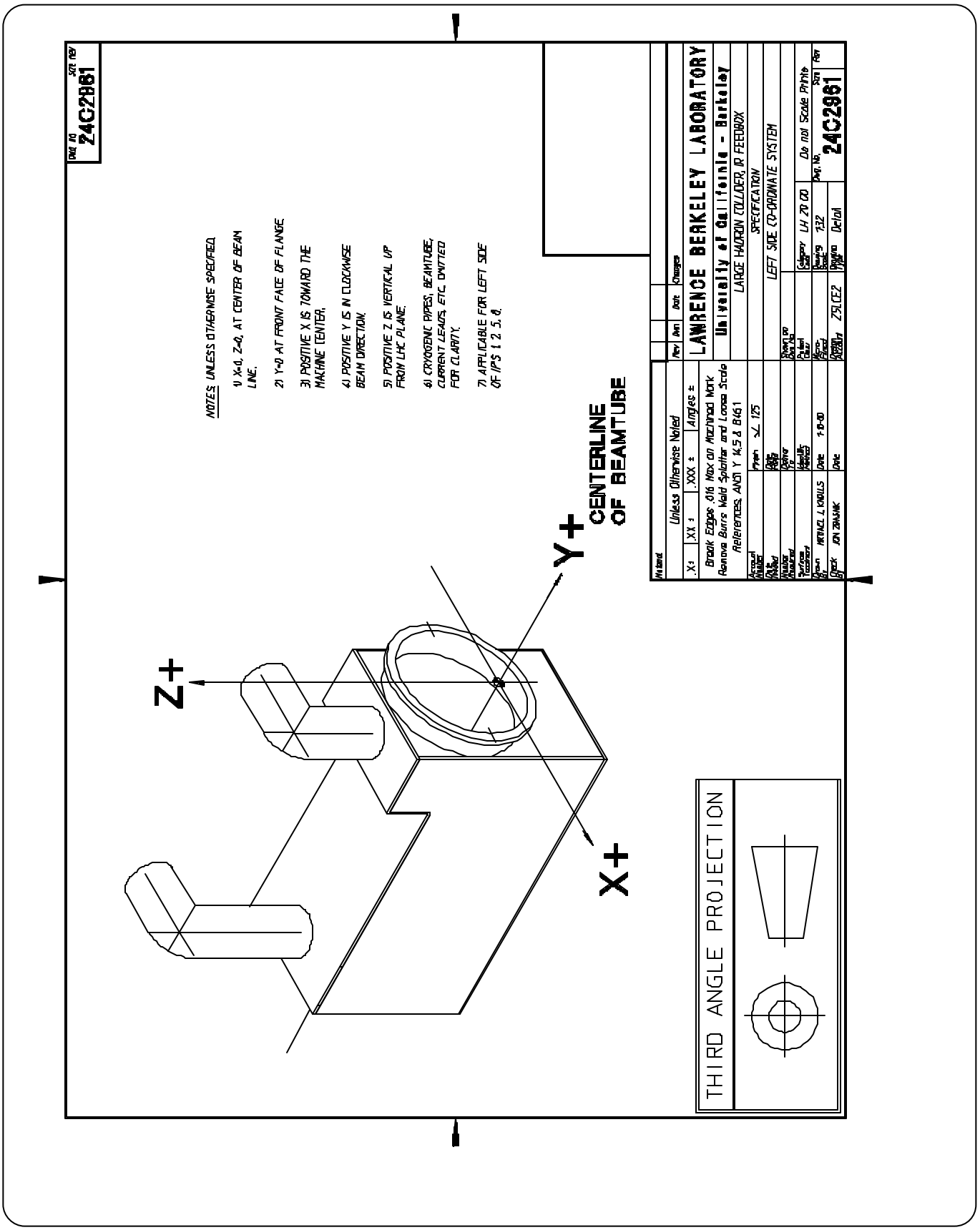
Dwg No 24C2961 Size rev
NOTES: UNLESS OTHERWISE SPECIFIED
1) X=0, Z=0, AT CENTER OF BEAM LINE.
2) Y=0 AT FRONT FACE OF FLANGE.
3) POSITIVE X IS TOWARD THE MACHINE CENTER.
4) POSITIVE Y IS IN CLOCKWISE BEAM DIRECTION.
5) POSITIVE Z IS VERTICAL UP FROM LHC PLANE.
6) CRYOGENIC PIPES, BEAMTUBE, CURRENT LEADS, ETC. OMITTED FOR CLARITY.
7) APPLICABLE FOR LEFT SIDE OF IPS 1 2 5 8.
Z+
Y+
X+
CENTERLINE OF BEAMTUBE
THIRD ANGLE PROJECTION
Unless Otherwise Noted
.X± .XX± .XXX± Angles ±
Break Edges .016 Max on Machined Work
Remove Burrs Weld Splatter and Loose Scale
References ANSI Y 14.5 & B461
Rev Dwn Date Changes
LAWRENCE BERKELEY LABORATORY
University of California - Berkeley
LARGE HADRON COLLIDER, IR FEEDBOX
SPECIFICATION
LEFT SIDE CO-ORDINATE SYSTEM
Do not Scale Prints
Dwg. No. 24C2961
Size Rev
Detail
Z5LCE2
MICHAEL J. KNOLLS
JON ZBASNIK

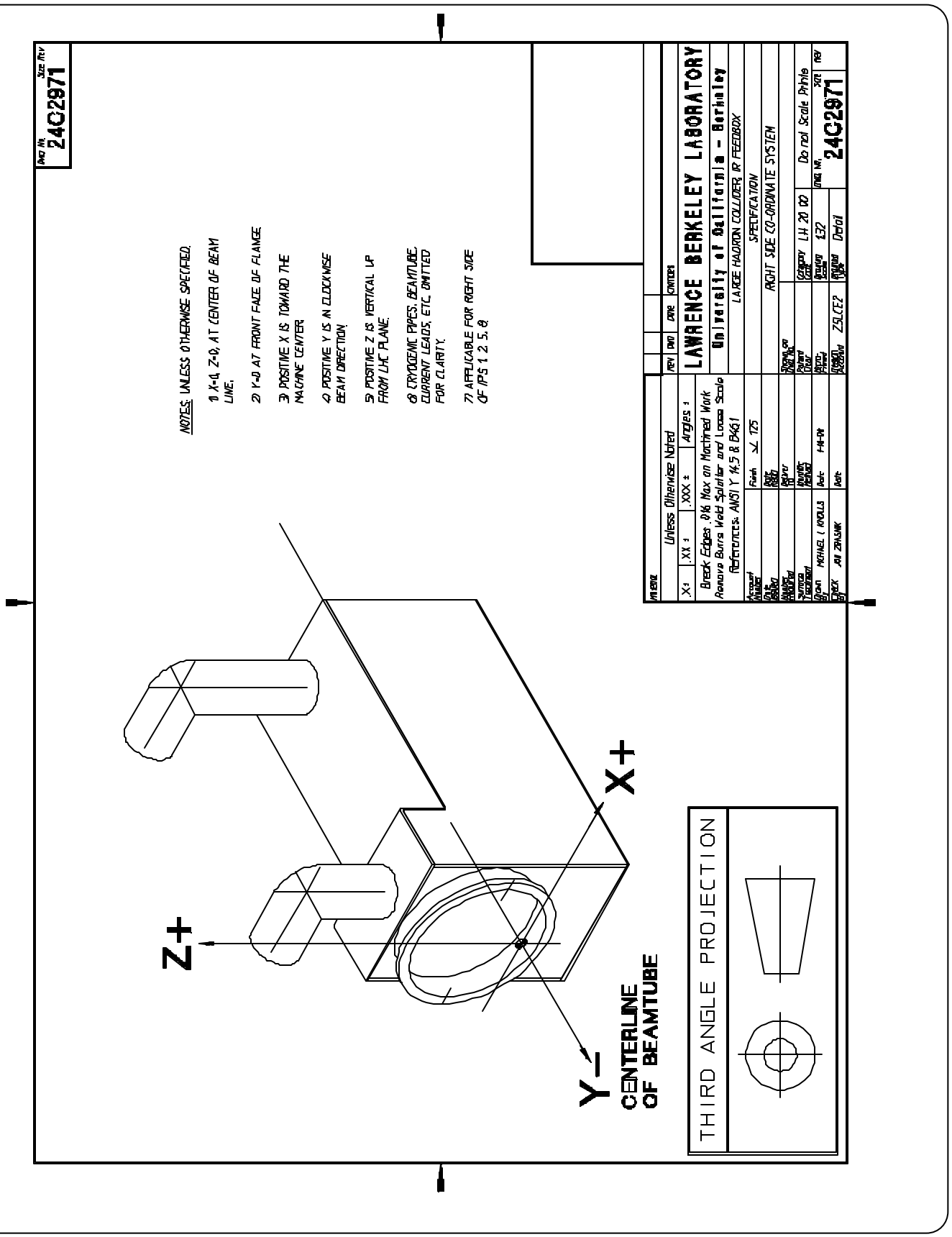
Dwg No. 24C2971
Size Rev
NOTES: UNLESS OTHERWISE SPECIFIED.
1) X=0, Z=0, AT CENTER OF BEAM LINE.
2) Y=0 AT FRONT FACE OF FLANGE
3) POSITIVE X IS TOWARD THE MACHINE CENTER
4) POSITIVE Y IS IN CLOCKWISE BEAM DIRECTION.
5) POSITIVE Z IS VERTICAL UP FROM LHC PLANE.
6) CRYOGENIC PIPES, BEAMTUBE, CURRENT LEADS, ETC. OMITTED FOR CLARITY.
7) APPLICABLE FOR RIGHT SIDE OF IP5 1 2 5, 8
Unless Otherwise Noted
.X ± .XX ± .XXX ± Angles ±
Break Edges .016 Max on Machined Work
Remove Burrs Weld Splatter and Loose Scale
References: ANSI Y 14.5 & B461
Finish ⊥ 125
LAWRENCE BERKELEY LABORATORY
University of California - Berkeley
LARGE HADRON COLLIDER, IR FEEDBOX
SPECIFICATION
RIGHT SIDE CO-ORDINATE SYSTEM
Do not Scale Prints
24C2971
Detail
Z+
X+
Y−
CENTERLINE OF BEAMTUBE
THIRD ANGLE PROJECTION